REVISIONS

REV #	ECN #	Description of Change	Engineer	Approved	Date
1	NDI	New Document	EPF	SJS	02/02/17
REV #	**ECN #**	**Description of Change**	**Approved**	**Quality**	**Date**
2	E1704009	Updated config table	SJS	RV	04/13/17

Description

Software Requirements for Relay Box Controller

1.0 INTRODUCTION AND OVERVIEW

1.1 Purpose

This Software Requirements Document of the Relay Box Controller is written to provide details required to write the system software for the embedded microcontroller

1.2 Responsibility

The Design Engineer responsible for the product is responsible to keep this document accurate and make sure that all engineers working on various aspects of the product always have the latest copy to work from.

1.3 Definitions and Acronyms

CMS	Cabin Management System
PA	Public Address
A/V	Audio/Video
LL	Low-Latency
TBD	To Be Defined
DSP	Digital Signal Processor
LI	Logical Input
HLI	High (+28VDC) logical input
NO	Normally open
NC	Normally close
Relay	Electrically operated switch
optocoupler	A light-emitting diode (LED) coupled with a photo transistor
µC	Microcontroller

1.4 References

Product Specification for Relay Controller, DWG 107800PS

1.5 Product Overview

The Relay Box controller is an independent module that controls the cabin lights, audio, and other equipment. It receives commands from the Alto CSS keypad modules or any discrete logic input. It can be configured through an RS-422 serial connection.

The unit can be implemented as a direct, pin compatible replacement for a legacy Pac Sys 1054 series component, and it forms the basis of a forward fit controller with provisions for future data bus control.

1.6 Functional Block Diagram

The Figure 1.1 shows the functional block diagram of the Relay Box Controller with the different subsystems it's composed and how are they connected.

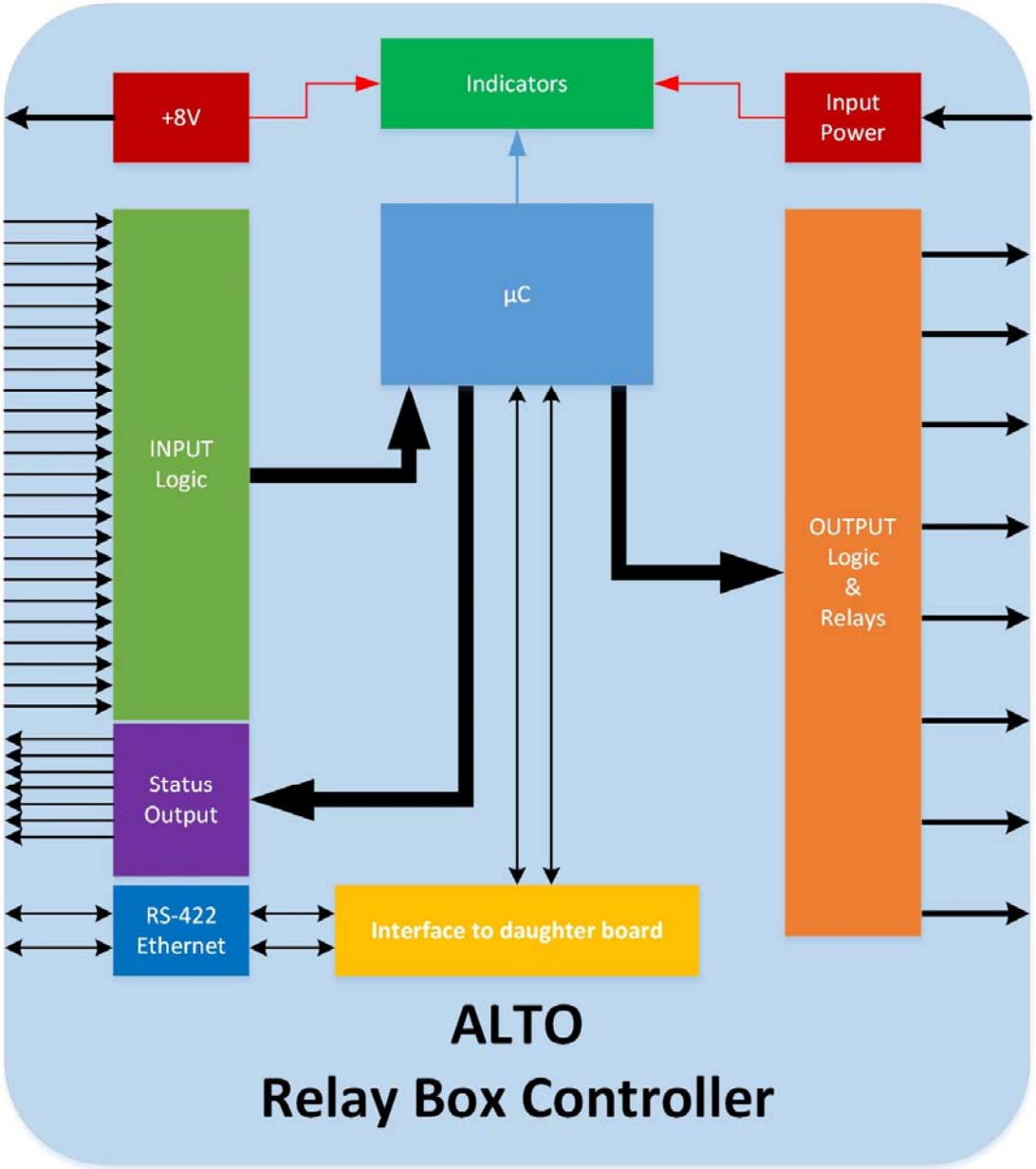

Figure 1.1

1.6.1 Circuit Block Description

Referring to Figure 1.1, the block diagram shows the basic functionality of the product.

1.6.2 Functional Blocks and Connection Definition

1.6.2.1 Output Logic & Relays

The output logic & relay block on the diagram represent the output relays and the logic needed to drive the relays. It receive commands from the µController and activate the corresponding relay. Every Relay Box Controller incorporate 8 relays. The output connector includes the NO (normally open) and NC (normally close) connections per relay. Every relay shall handle 5Amp. Figure 1.2 shows how the µController commands a relay through a driver.

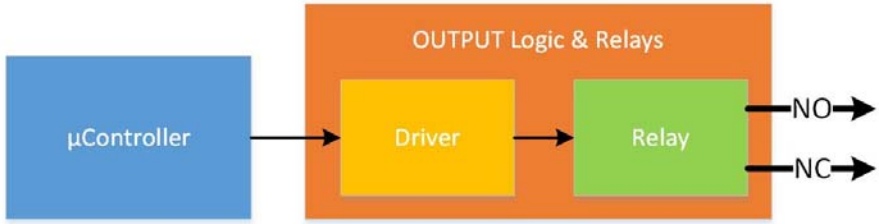

Figure 1.2

1.6.2.2 Input Power

The relay box controller can be supply by 3 different input power pins. The Input Power block on the diagram represent the electronic circuits that will handle the power supply. These three inputs will be combine and generate 3 voltages for the internal circuitry.

- **+28V/+5V**. This is voltage will be used to supply the input logic pull-up resistors. The microcontroller will select either +28V or +5V for all the pull-up resistors.
- **+8V**. This voltage will be used to supply external modules.
- **+5V**. This is voltage will be used to supply the input logic pull-up resistors.
- **+3.3V**. This is going to be the main power supply for the electronics on the board.

It also will include input voltage monitors connected to the microcontroller so the microcontroller can select which outputs can be active depending on the input power supply.

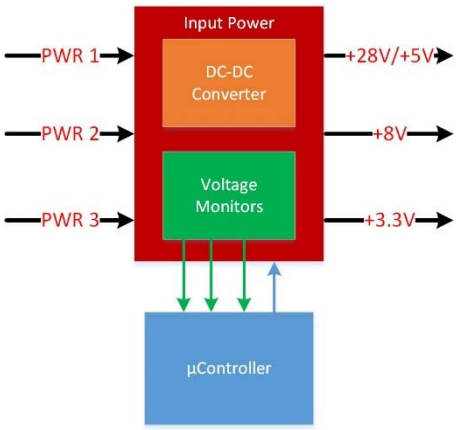

Figure 1.3

1.6.2.3 Input Logic

The input logic block on the diagram accept up to 27 input signals. Every input can be configure to be pull-down or pull up independently. All the pull up resistors are connected to the +5V power supply. There are 8 special inputs can be selected to have 28V pullups.

Figure 1.4 shows the logical connection between the input logic and the microcontroller. The input logic is composed by 27 input channels and every input pin is connected to their corresponding input channel. Every input channel implement a Configurable Logic Unit (or CLU). The function of the CLU is to configure every pin independently as pull down or up with the corresponding voltages and isolate optically the inputs from the microcontroller side as shown in Figure 1.5. The microcontroller is responsible of configure every pin independently to function as the particular application requires.

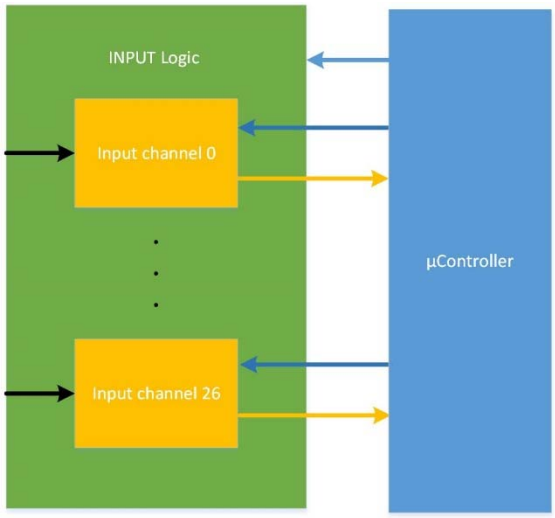

Figure 1.4

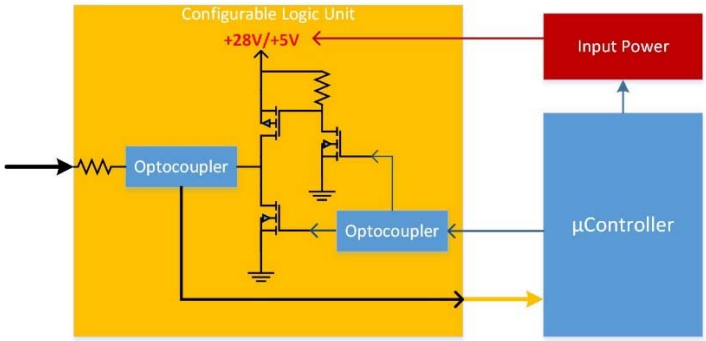

Figure 1.5

1.6.2.4 Status Output

This block covers the electronic that handles the status indicators on an external module. The relay box controller can handle up to 8 indicators and can be configure by software. Every indicator output has an open collector interface so the output module requires to have a pull up resistor.

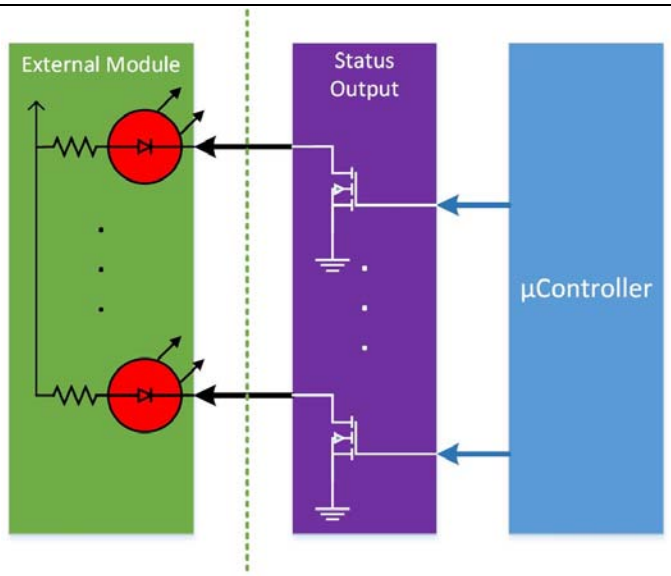

Figure 1.6

1.6.2.5 +8V Output

The relay box controller provides +8V output on the input connector to power external modules when needed.

1.6.2.6 RS-422 & Ethernet

The RS-422 & Ethernet block on the diagram represent the serial interface of the Relay Box. The RS-422 can be used to send commands to the relay box, read status information and configure the unit. The Ethernet interface is connected to the interface to a daughter board for future implementation.

1.6.2.7 Interface to daughter board

The interface to daughter board is included to add new functionalities in the future.

1.6.2.8 Indicators

The indicators will be used as a way to show the status of the Relay Box Controller.

- **+3.3V**. Green - Indicates there is power from the 3.3V regulator running the uCom.
- **Fault**. Red - blinks to indicate faults according to codes.
- **Activity**. Blue - blinks when activity on input or output happens (.25 sec ON)

1.6.2.9 µController

The microcontroller is the brain of the Relay Box Controller. It receives input from all the input signals, and the power supply monitors and act on the relays according to the configuration programmed. Optocouplers are used to isolate control and controlled circuits.

2.0 SOFTWARE REQUIREMENTS

2.1 Software functionality.

The core of the design is a PIC 32MX460F512 micro controller. The software design is based around the proven architecture used already in the Alto DA and DX amplifier series. The primary input and output to the unit is performed using the 27 discrete logic input, 8 relay outputs, and 8 status output. The microcontroller can be configured in various modes to take input from the discrete inputs and trigger the relays and status outputs according to various functional algorithms.

- Discrete logic inputs have selectable pull up (or pull down) either ground or 28VDC active. Each input can be set for active high or low by software. (28VDC active required for Pac Sys replacement)
- LED outputs will be ground active, open collector. The LED state generally will follow the action of the relay. When the NO/COMM are shorted, the LED output will be active.

2.2 PIC Pin assignments.

2.2.1 Output Status indicators (active low triggers light)

PIC port IND_OUTX RB0 to RB7 (8 outputs) O

2.2.2 Relay Output (active low triggers relay)

PIC port RELAY_OUTX RD1 to RD7 & RF0 (8 outputs) O

2.2.3 Input Discrete matrix. Input pins are address selected, then the input port is read. Inputs are in 4 banks of 8 inputs each for bank A,B,C, and 3 inputs for D

PIC port CLU_INPUT_ADDR(0-4) discrete input address RE0 to RE4 (select input 0 - 7) O. Also 3 LSBs used for address of pull-up latch banks.

PIC port CLU_INP_DATA RE9 input CLU data from selected address I

2.2.4 Input Discrete pullup/dn latches. Pullup latches are address selected, then the latch is written.

PIC port CLU_PULL_CFG RE7 Sets config value for pullup to be written 1=pullup, 0=pulldown. O

PIC port CLU_MASTER_RESET_ pullup/dn reset bit RE8 O (pull low to reset all latches)

PIC port CLU_LOAD_BANK_1_ Bank 1 Load bit RG13 O (low to hi to latch)

PIC port CLU_LOAD_BANK_2_ Bank 2 Load bit RG12 O (low to hi to latch)

PIC port CLU_LOAD_BANK_3_ Bank 3 Load bit RG15 O (low to hi to latch)

PIC port CLU_LOAD_BANK_4_ Bank 4 Load bit RG14 O (low to hi to latch)

PIC port PULLUP_5V_28V Select 5 or 28V RC13 O (low = 5V, hi = 28V)

2.2.5 Aux Indicator LEDs. These are 4 red LEDS used to show something???

PIC port AUX_IND0 (Red Error) LED indicator (High for light) RA3 O

PIC port AUX_IND1 (Blue Activity) LED indicator (High for light) RA2 O

PIC port AUX_IND2 (Reserved1) LED indicator (High for light) RG2 O

PIC port AUX_IND3 (Reserved2) LED indicator (High for light) RG3 O

2.2.6 UARTs

PIC port UART1_RX (RF2)
PIC port UART1_TX (RF8)
PIC port UART2_RX (RF4)
PIC port UART2_TX (RF5)

2.2.7 SPI Ports

PIC port SPI1_MISO (RC4)
PIC port SPI1_MOSI (RD0)
PIC port SPI1_SCK (RD10)
PIC port SPI_FLASH_CS (RC2)
PIC port SPI_EEPROM_CS (RC1)
PIC port SPI2_MISO (RC4) (unused)
PIC port SPI2_MOSI (RD0) (unused)
PIC port SPI2_SCK (RD10) (unused)
PIC port SPI2_CS (RC2) (unused)

2.2.8 Voltage monitoring – connected to A/D ports, each with scale factor

PIC port VM_28V5V (RB8) An-I voltage of the pull-up V set by PULLUP_5V_28V. Attenuation factor is X10
PIC port VM_5V (RB9) An-I voltage of the 5V supply. Attenuation factor is X2
PIC port VM_8V (RB12) An-I voltage of the 8V supply. Attenuation factor is X2
PIC port VM_POWER1 (RB13) An-I voltage of the 28V power input 1. Attenuation factor is X10
PIC port VM_POWER2 (RB14) An-I voltage of the 28V power input 2. Attenuation factor is X10
PIC port VM_POWER3 (RB15) An-I voltage of the 28V power input 3. Attenuation factor is X10

2.3 Configuration Table

The configuration table contains functional definitions for each of the 27 Input pins, and some additional general settings. Config table is queried and written to over Altonet. Sample as follows

Index	Parameter	Value	Low-Lim	Hi-Lim	Default	DataType
0	InpA1_Function	1	1	8	1	DISCRETE
1	InpA1_Target_Relay	1	1	8	1	TARGET
2	InpA1_Target_Status	1	1	8	1	TARGET
3	InpA1_Hold_Delay	0	0	255	0	DELAY
4	InpA1_Param	0	0	255	0	PARAM
5	InpA1_Pullup	0	0	1	0	ON/OFF
… for Inputs A1-A8, B1-B8, C1-C8, D1-D3						
162	Power1_Mask	0	0	255	0	MUTE
163	Power2_Mask	0	0	255	0	MUTE
164	Power3_Mask	0	0	255	0	MUTE
165	Pullup5or28	0	0	1	0	ON/OFF
166	EnableInOutAsOutputs	0	0	1	0	ON/OFF
167	Inp_Cold_Restore	0	0	1	0	ON/OFF
168	Inp_Warm_Restore	0	0	1	0	ON/OFF

169	Rly_Cold_Restore	0	0	255	0	RLY-TARGET
170	Rly_Cold_OnOff	0	0	255	0	RLY-TARGET
171	Rly_Warm_Restore	0	0	255	0	RLY-TARGET
172	Rly_Warm_OnOff	0	0	255	0	RLY-TARGET
173	Ind_Cold_Restore	0	0	255	0	RLY-TARGET
174	Ind_Cold_OnOff	0	0	255	0	RLY-TARGET
175	Ind_Warm_Restore	0	0	255	0	RLY-TARGET
176	Ind_Warm_OnOff	0	0	255	0	RLY-TARGET

2.3.1 Config type definitions

2.3.1.1 InputX_Function

2.3.1.1.1 0= No Function

2.3.1.1.2 1= Toggle. Single press turns on the target relay on, second press off, etc.

2.3.1.1.3 2=Momentary. Detect a transition to on and the target relay is turned on, transition to off turns target relay off.

2.3.1.1.4 3=Set-ON. Single press latches relay on. Stays on until Set-OFF issued or another input toggle, or master Off.

2.3.1.1.5 4=Set-OFF. Single press clears any latched on relay.

2.3.1.1.6 5=Sequence. Single press turns on first relay in sequence. Further press turns off current relay and on next relay. Repeat until relay limit parameter reached. Cycles around to first after limit.

2.3.1.1.7 6=Binary Count. Single press turns on target relay. Further presses triggers a binary bit count using relays of higher number until count limit is reached. Press after count limit starts over at initial setting (0)

2.3.1.1.8 7=OneShot. Single press latches relay on for duration specified in parameter field.

2.3.1.1.9 8=Master Off Reset. Single press clears any on-latched relays. Even a momentary switched relay gets cleared.

2.3.1.1.10 9=Hotcup. Single press latches relay for duration specified (similar to OneShot), with differences: Companion output status indicator blinks off for 0.5 seconds once every 5 seconds, When remaining count is less than 10 sec then blink goes to 0.5 seconds off once every 1 sec. Press & hold more than 1 sec and timer/relay is reset. A single press received during an already running Hotcup countdown will pause the count down and shut off the relay. During this time the LED will blink on-off-on-off at .25 sec each then off for 1 sec. A second single switch press resumes countdown and re-engages relay.

2.3.1.2 InputX_Target_Relay Target is a bit mask allowing targeting more than 1 relay. Bits 0-7 selects relay(s) as the target of the corresponding input action.

2.3.1.3 InputX_Target_Status Target is a bit mask allowing targeting more than 1 status line. Bits 0-7 selects Status line(s) as the target of the corresponding input action.

2.3.1.4 InputX_HoldDel

2.3.1.4.1 0-255 specifies required press and hold time of an input before it is considered triggered. Time is in 20's of mS, so a value of 20 = 400mS.

2.3.1.5 InputX_Param

2.3.1.5.1 For Toggle, Momentary, Set-ON, Set-Off: N/A

2.3.1.5.2 For Sequence: bits 0-2 specify the first relay in the sequence (0-7), bits 3-5 specify the last relay in sequence (0-7). Bit 7 indicates to include All-Off in the sequence (1 = include AllOff)

2.3.1.5.3 For Binary Count: Specifies the upper count limit (max 255)

2.3.1.5.4 For OneShot: Specifies the duration of the one shot hold, in 100's of mS (so value of 25 = 2.5sec.)

2.3.1.5.5 For Hotcup: Specifies the duration of the timer, in 10's of seconds (so value of 25 = 250 seconds – 4 min 10 sec).

2.3.1.6 InputX_Pullup

2.3.1.6.1 0 Sets the corresponding input to pull-down – requiring active high input

2.3.1.6.2 1 Sets the corresponding input to 5V pull-up – requiring active low input

2.3.1.7 PowerX_Mask

2.3.1.7.1 Bit mask to inhibit relays based on the presence of voltage on the power1,2,3 lines. If a relay# is included in the bit mask then it will not activate if the power is not detected on the specified power line.

2.3.1.8 Pullup5or28

2.3.1.8.1 0 indicates a 5V pullup for the pull-up on the dual level inputs (Inputs A, pins 16-19, 34-37).

2.3.1.8.2 1 indicates a 28V pullup for the pull-up on the dual level inputs (Inputs A, pins 16-19, 34-37).

2.3.1.9 EnableInOutAsOutputs

2.3.1.9.1 0 indicates that inputs 25,26,27 are configured as inputs (set pin INOUTEN to low)

2.3.1.9.2 1 indicates that inputs 25,26,27 are configured as outputs (set pin INOUTEN to High)

2.3.1.9.3 *note: Functionality of pins 25,26,27 as output are TBD. Latch them all to LOW state (INOUT0,1,2 set to low).

2.3.1.10 Inp[ut]_Cold_Restore

2.3.1.10.1 Logical indicating if input functions (Sequence and Binary Sequence) will restore their state after a COLD power cycle. 1 = Restore, 0 = don't restore

2.3.1.11 Inp[ut]_Warm_Restore

2.3.1.11.1 Logical indicating if input functions (Sequence and Binary Sequence) will restore their state after a WARM power cycle. 1 = Restore, 0 = don't restore

2.3.1.12 Rly_Cold_Restore

2.3.1.12.1 Bit mask indicating which relays will have their state restored upon COLD power cycle. Ex: Value 255 means all 8 relays will restore to current state if power is cycled for more than 1.5 min.

2.3.1.13 Rly_Cold_OnOff

2.3.1.13.1 Bit mask indicating the state that the relays will be set to upon COLD power cycle if the Cold_Restore is not selected for the corresponding relay. Ex: if Rly_Cold_Restore is set to 0 and Rly_Cold_OnOff is set to 255 then all 8 relays will be forced to ON state after cold power cycle.

2.3.1.14 Rly_Warm_Restore

2.3.1.14.1 Bit mask indicating which relays will have their state restored upon WARM power cycle.

2.3.1.15 Rly_Warm_OnOff

2.3.1.15.1 Bit mask indicating the state that the relays will be set to upon WARM power cycle if the Warm_Restore is not selected for the corresponding relay.

2.3.1.16 Ind_Cold_Restore

2.3.1.16.1 Bit mask indicating which of the 8 relay indicators will have their state restored upon COLD power cycle.

2.3.1.17 Ind_Cold_OnOff

2.3.1.17.1 Bit mask indicating the state that the 8 relays indicators will be set to upon COLD power cycle if the Cold_Restore is not selected for the corresponding indicator.

2.3.1.18 Ind_Warm_Restore

2.3.1.18.1 Bit mask indicating which of the 8 relay indicators will have their state restored upon WARM power cycle.

2.3.1.19 Ind_Warm_OnOff

2.3.1.19.1 Bit mask indicating the state that the 8 relay indicators will be set to upon WARM power cycle if the Warm_Restore is not selected for the corresponding relay.

2.4 Fault monitoring

2.4.1 Voltage level monitoring levels

2.4.1.1 For 28V/5V – in 28V setting the fault threshold is 17V. Above is OK, below is fault.

2.4.1.2 For 5V – the fault threshold is 4.4V.

2.4.1.3 For 8V – the fault threshold is 7.0V.

2.4.1.4 For the 3 Power monitors, – the fault threshold is 17V. A fault should only be triggered for this if all 3 are below the threshold.

2.4.2 Error monitoring. The following are considered error conditions and should be monitored

2.4.2.1 Voltage levels per section 2.4.1.1

2.4.2.2 EEPROM fault if config data can't be read or data is invalid

2.4.3 Red LED blink codes. If there is a fault to report the RED LED will blink the fault code at 50% duty cycle .25Sec ON for the code, followed by 1 second of LED off. If multiple codes are present then cycle through each with 1 sec pause between. Repeat list of blink codes forever until cleared.

2.4.3.1 1 blink - Power voltage fault

2.4.3.2 2 blinks – 5V supply fault

2.4.3.3 3 blinks – 8V supply fault

2.4.3.4 4 blinks – 28V/5V pullup supply fault

2.4.3.5 5 blinks – EEPROM fault

2.5 Activity LED. The Blue LED is used to indicate when an action has been executed. In the even that any relay or status line changes state, the Blue LED should be illuminated for 0.5 seconds..

2.6 Altonet commands for operation

Commands that apply to this unit include:

2.6.1 Prepare for Restart

2.6.2 Restart

2.6.3 Device Detailed Status (re-defined)

2.6.4 Config Data Parameter

2.6.5 Manufacturing Info

2.6.6 RelayControlSequence (added to).

2.7 Operation

2.7.1 Startup, initialize, read Config table

2.7.2 For all input lines, select pullup register address, output PULL_BIT based on config setting, Toggle corresponding PULL_LDX line to latch.

2.7.3 Set PULL_+5/28 based on config Pullup5or28.

2.7.4 Do any setup prep based on the Function settings of each input.

2.7.5 Loop task polling all Input lines.

2.7.6 Monitor the Voltage settings.

2.7.7 If a line transition is detected, check HoldDelay setting, set timer to insure Input is held through hold delay time.

2.7.8 Apply function specified by Input settings to relays (considering power mask settings

2.7.9 Likewise, if AltoNet command comes in process it and apply action specified.

2.8 Contention

It is understood that incorrect configuration could cause conflict situations, such as when 1 relay is the target of more than 1 input actions. The configuration of this device is under control of Alto, therefore the Alto engineer needs to insure that it is properly configured without possibility of adverse conflicts. The software can be written without any specific contention handling hindsight.