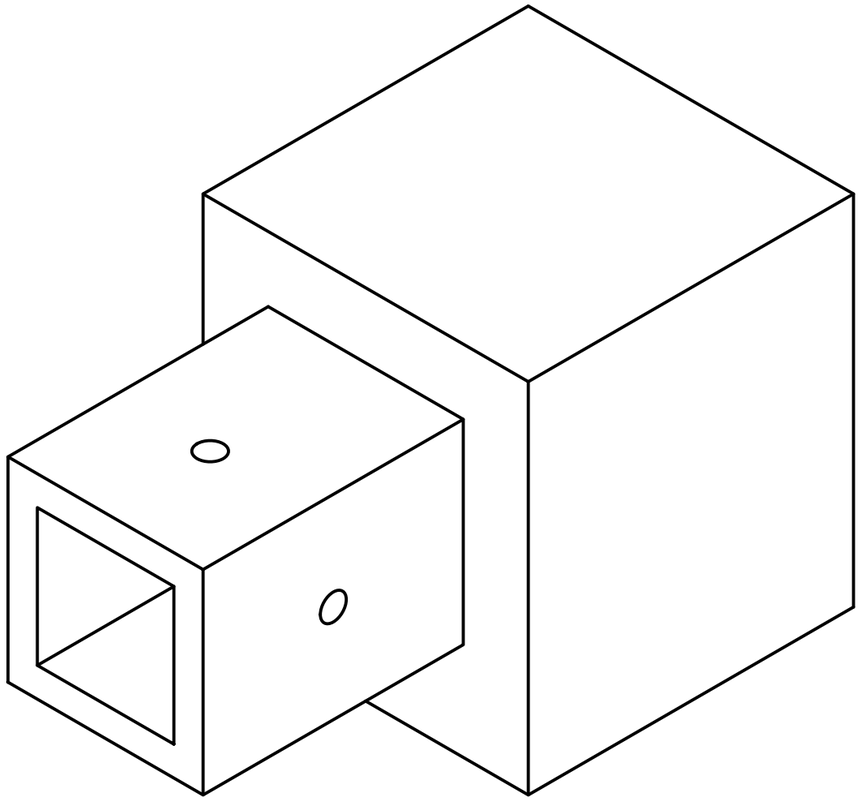

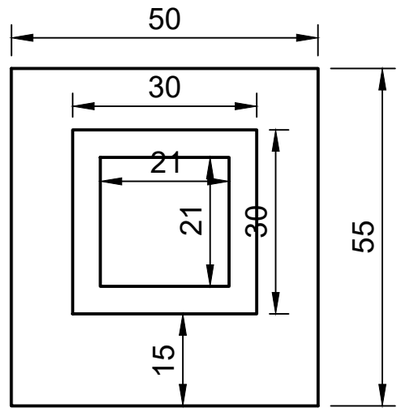

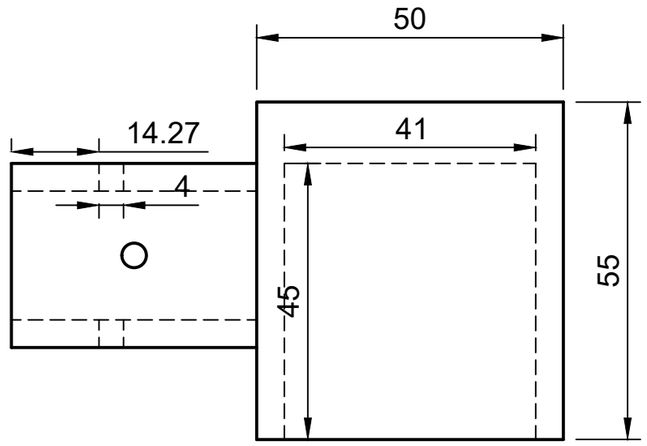

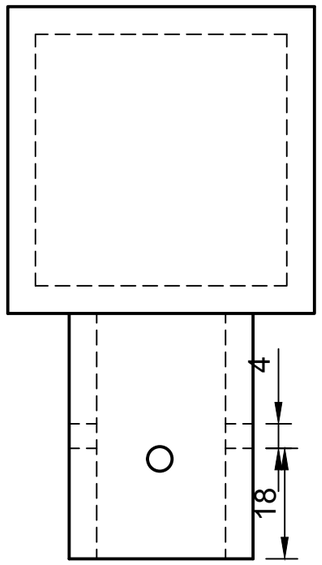

Dept.	Technical reference	Created by Victor Zablocki	Approved by
		Document type	Document status
		Title Profile Connect Part	DWG No.
			Rev. / Date of issue / Sheet 1/1