Lecture 9: Risk Aversion vs Intertemporal Substitution

Raul Riva
FGV EPGE

February, 2026

Intro

- We covered two ways to solve the equity premium puzzle: habits and disasters
- Habits can be relatively hard to microfound depending on who you ask...
- Disaster models are super hard to calibrate...
- Epstein and Zin (1989, 1991) adapted Kreps and Porteus (1978) to Asset Pricing
- Risk aversion and intertemporal substitution become disentangled

Flight Plan

- Basics from Kreps and Porteus (1978) – please take Leandro's class if you want axioms and fancy things!
- Preferences following the parametrization in Epstein and Zin (1989)
- Derivation of the SDF as in Epstein and Zin (1991)
- Empirical performance (Epstein and Zin 1991; Weil 1989)

Building Blocks

What is Risk Aversion?

- This is essentially how you rank risky bets (lotteries)
- You don't need the concept of *time* to think about risk aversion

What is Risk Aversion?

- This is essentially how you rank risky bets (lotteries)
- You don't need the concept of *time* to think about risk aversion
- X: a set of outcomes; $\Delta(X)$: the set of lotteries over X (the simplex)
- Let $\succeq$ be a preference relation over $\Delta(X)$
- You are **risk-averse** if, for any $p \in \Delta(X)$, you have $\delta_{\mathbb{E}[p]} \succeq p$

What Von-Neumann and Morgenstern Taught Us

- Typical assumptions: $\succeq$ is complete, transitive, and continuous
- Independence axiom: if $p \succeq q$, then for any r and $\alpha \in (0, 1)$, we have $\alpha p + (1 - \alpha)r \succeq \alpha q + (1 - \alpha)r$

What Von-Neumann and Morgenstern Taught Us

- Typical assumptions: $\succeq$ is complete, transitive, and continuous
- Independence axiom: if $p \succeq q$, then for any r and $\alpha \in (0, 1)$, we have $\alpha p + (1 - \alpha)r \succeq \alpha q + (1 - \alpha)r$
- Under independence, $\succeq$ can be represented by a utility function $U : \Delta(X) \to \mathbb{R}$ such that

$$U(p) = \sum_{x \in X} \pi(x)u(x)$$

  where $\pi(x)$ is the probability of outcome x and $u(x)$ is the utility of outcome x
- The preferences we will cover in this lecture will violate exactly this axiom, stay tuned!

More or Less Risk Averse?

- The **Certainty Equivalent** of $p \in \Delta(X)$ is the amount of money c such that $\delta_c \sim p$

$$CE(p) \equiv \{c \in \mathbb{R} : \delta_c \sim p\}$$

More or Less Risk Averse?

- The **Certainty Equivalent** of $p \in \Delta(X)$ is the amount of money c such that $\delta_c \sim p$

$$CE(p) \equiv \{c \in \mathbb{R} : \delta_c \sim p\}$$

- With a slight abuse of notation:

$$u(CE(p)) = \mathbb{E}[u(x)] \iff CE(p) = u^{-1}(\mathbb{E}[u(x)])$$

More or Less Risk Averse?

- The **Certainty Equivalent** of $p \in \Delta(X)$ is the amount of money c such that $\delta_c \sim p$

$$CE(p) \equiv \{c \in \mathbb{R} : \delta_c \sim p\}$$

- With a slight abuse of notation:

$$u(CE(p)) = \mathbb{E}[u(x)] \iff CE(p) = u^{-1}(\mathbb{E}[u(x)])$$

- John is (weakly) **more risk-averse** than Mary if $CE_J(p) \leq CE_M(p)$ for all $p \in \Delta(X)$
- Pratt showed that this is all about how concave u is!
- Concavity is measured by second derivatives... but these are not scale-free!
- We typically measure risk aversion by $-u''(.)/u'(.)$ or $-x \cdot u''(x)/u'(x)$
- Many prominent utility functions: CARA, CRRA, HARA, ...

The Special Case of CRRA

- In Macro, we often use the CRRA utility function:

$$u(C) = \frac{C^{1-\gamma} - 1}{1 - \gamma}$$

- The parameter γ is the coefficient of relative risk aversion (RRA)

$$\frac{-c \cdot u''(c)}{u'(c)} = \gamma$$

- Relative risk aversion is constant across all levels of consumption

The Special Case of CRRA

- In Macro, we often use the CRRA utility function:

$$u(C) = \frac{C^{1-\gamma} - 1}{1 - \gamma}$$

- The parameter γ is the coefficient of relative risk aversion (RRA)

$$\frac{-c \cdot u''(c)}{u'(c)} = \gamma$$

- Relative risk aversion is constant across all levels of consumption
- The real reason people like this in Macro: homothetic preferences
- If $x \succeq y$, then $\alpha x \succeq \alpha y$ for any $\alpha > 0$ (Indifference curves are radially symmetric)

The Special Case of CRRA

- In Macro, we often use the CRRA utility function:

$$u(C) = \frac{C^{1-\gamma} - 1}{1 - \gamma}$$

- The parameter γ is the coefficient of relative risk aversion (RRA)

$$\frac{-c \cdot u''(c)}{u'(c)} = \gamma$$

- Relative risk aversion is constant across all levels of consumption
- The real reason people like this in Macro: homothetic preferences
- If $x \succeq y$, then $\alpha x \succeq \alpha y$ for any $\alpha > 0$ (Indifference curves are radially symmetric)
- Optimal portfolio weights are independent of wealth (with complete markets)
- Equilibrium prices (and returns) depend on *growth rates*, not levels

Questions?

Intertemporal Substitution

- You don't need the concept of *uncertainty* to think about intertemporal substitution
- Think about two periods and a consumer choosing optimal consumption:

$$\max_{C_1, C_2} u(C_1) + \beta u(C_2) \quad \text{s.t.} \quad C_1 + \frac{C_2}{1+r} = W$$

Intertemporal Substitution

- You don't need the concept of *uncertainty* to think about intertemporal substitution
- Think about two periods and a consumer choosing optimal consumption:

$$\max_{C_1, C_2} u(C_1) + \beta u(C_2) \quad \text{s.t.} \quad C_1 + \frac{C_2}{1+r} = W$$

- The relative price of consumption between the periods is $1 + r$
- If r goes up, you consume less today and save more... but **how much more**?

Intertemporal Substitution

- You don't need the concept of *uncertainty* to think about intertemporal substitution
- Think about two periods and a consumer choosing optimal consumption:

$$\max_{C_1, C_2} u(C_1) + \beta u(C_2) \quad \text{s.t.} \quad C_1 + \frac{C_2}{1+r} = W$$

- The relative price of consumption between the periods is $1 + r$
- If r goes up, you consume less today and save more... but **how much more**?
- **Elasticity of Intertemporal Substitution (EIS)**: $\frac{d\log(c2/c1)}{d\log(1+r)} > 0$

Intertemporal Substitution

- You don't need the concept of *uncertainty* to think about intertemporal substitution
- Think about two periods and a consumer choosing optimal consumption:

$$\max_{C_1, C_2} u(C_1) + \beta u(C_2) \quad \text{s.t.} \quad C_1 + \frac{C_2}{1+r} = W$$

- The relative price of consumption between the periods is $1 + r$
- If r goes up, you consume less today and save more... but **how much more**?
- **Elasticity of Intertemporal Substitution (EIS)**: $\frac{d\log(c2/c1)}{d\log(1+r)} > 0$
- Exercise: show that for CRRA preferences, the EIS is $1/\gamma$

Risk Aversion vs Intertemporal Substitution

- With CRRA preferences, high $\gamma \implies$ high risk aversion
- But high $\gamma \implies$ low EIS $\implies$ low willingness to substitute consumption
- Only two possibilities:
  - High γ: very risk-averse, hates shifting consumption around
  - Low γ: not very risk-averse, and very willing to shift consumption around

Risk Aversion vs Intertemporal Substitution

- With CRRA preferences, high $\gamma \implies$ high risk aversion
- But high $\gamma \implies$ low EIS $\implies$ low willingness to substitute consumption
- Only two possibilities:
  - High γ: very risk-averse, hates shifting consumption around
  - Low γ: not very risk-averse, and very willing to shift consumption around
- If you bump up γ to make the consumer afraid of equity...
- She will be really upset about shifting consumption around!
- You have to make the relative price of consuming tomorrow low $\implies$ high risk-free rate!
- The prize for waiting must be large... risk-free rate puzzle from Weil (1989)!

Questions?

A New Class of Preferences Comes to Town

Do We Care About *When* Uncertainty is Resolved?

- With expected utility, only probabilities and outcomes matter
- The timing of uncertainty is irrelevant
- But what if you care about *when* uncertainty is resolved?

Do We Care About *When* Uncertainty is Resolved?

- With expected utility, only probabilities and outcomes matter
- The timing of uncertainty is irrelevant
- But what if you care about *when* uncertainty is resolved?
- An irreversible medical condition... do you want to find out now or later?
- At the slot machine in Vegas... do you want to wait and gamble, or to resolve it immediately?
- It's already decided whether you get tenured or not... do you want to find out now or later?

Kreps-Porteus Preferences

- Kreps and Porteus (1978): axiomatic characterization of preferences over lotteries *and* timing
- In the EU framework, "time" only matters because it induces other *states*...
- Example: flip a coin, consume 5 at $t = 0$, 10 at $t = 1$ if heads, 0 at $t = 1$ if tails
- Do you want to find out the outcome of the coin flip at $t = 0$ or at $t = 1$?

Kreps-Porteus Preferences

- Kreps and Porteus (1978): axiomatic characterization of preferences over lotteries *and* timing
- In the EU framework, "time" only matters because it induces other *states*...
- Example: flip a coin, consume 5 at $t = 0$, 10 at $t = 1$ if heads, 0 at $t = 1$ if tails
- Do you want to find out the outcome of the coin flip at $t = 0$ or at $t = 1$?
- Under EU, you should be indifferent between options
- KP preferences allow you to prefer one over the other

Kreps-Porteus Preferences

- Kreps and Porteus (1978): axiomatic characterization of preferences over lotteries *and* timing
- In the EU framework, "time" only matters because it induces other *states*...
- Example: flip a coin, consume 5 at $t = 0$, 10 at $t = 1$ if heads, 0 at $t = 1$ if tails
- Do you want to find out the outcome of the coin flip at $t = 0$ or at $t = 1$?
- Under EU, you should be indifferent between options
- KP preferences allow you to prefer one over the other
- EU: preferences over probability distributions
- KP: preferences over "filtrations" – information structures
- KP recover EU when the agent does not care about timing

Quick Look Into Their Setup (Skipping Super Technical Terms)

- Time is discrete $t \in \{0, 1, 2, \dots, T\}$
- For every t, there is a payoff space Z_t
- D_T is the set of probability measures over Z_T (lotteries at time T)

Quick Look Into Their Setup (Skipping Super Technical Terms)

- Time is discrete $t \in \{0, 1, 2, \dots, T\}$
- For every t, there is a payoff space Z_t
- D_T is the set of probability measures over Z_T (lotteries at time T)
- X_t: the set of all nonempty closed subsets of D_t
- $D_{T-1} \equiv Z_{T-1} \times X_T$

Quick Look Into Their Setup (Skipping Super Technical Terms)

- Time is discrete $t \in \{0, 1, 2, \dots, T\}$
- For every t, there is a payoff space Z_t
- D_T is the set of probability measures over Z_T (lotteries at time T)
- X_t: the set of all nonempty closed subsets of D_t
- $D_{T-1} \equiv Z_{T-1} \times X_T$
- In general: $D_t \equiv Z_t \times X_{t+1}, \forall t < T$
- Your preference relation $\succeq$ ranks elements of D_t for all t

Quick Look Into Their Setup (Skipping Super Technical Terms)

- Time is discrete $t \in \{0, 1, 2, \dots, T\}$
- For every t, there is a payoff space Z_t
- D_T is the set of probability measures over Z_T (lotteries at time T)
- X_t: the set of all nonempty closed subsets of D_t
- $D_{T-1} \equiv Z_{T-1} \times X_T$
- In general: $D_t \equiv Z_t \times X_{t+1}, \forall t < T$
- Your preference relation $\succeq$ ranks elements of D_t for all t
- Usual stuff: completeness, transitivity, continuity, monotonicity, ...
- If you want some stuff, check the paper!

Example

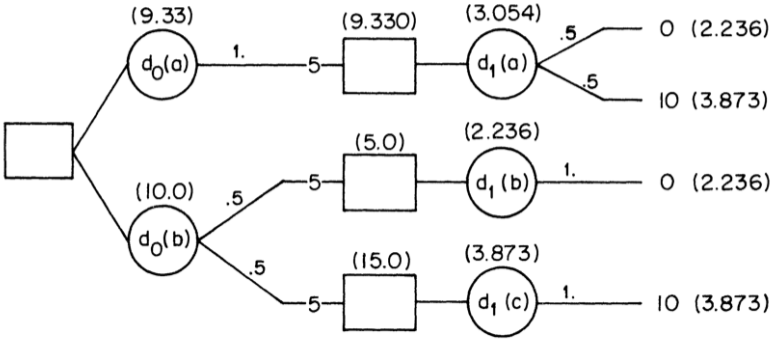

FIGURE 2.

The Representation Theorem

- In a finite decision tree, suppose U_t is your continuation value
- U_{t+1}: the *random* (from the point of view of t) continuation value tomorrow
- Let $\mu_t(U_{t+1})$ be the certainty equivalent of U_{t+1}
- Interpretation: money you get right now, for sure, to stop playing

The Representation Theorem

- In a finite decision tree, suppose U_t is your continuation value
- U_{t+1}: the *random* (from the point of view of t) continuation value tomorrow
- Let $\mu_t(U_{t+1})$ be the certainty equivalent of U_{t+1}
- Interpretation: money you get right now, for sure, to stop playing
- Axioms from Kreps and Porteus (1978) $\implies$ there exists an "aggregator" function f such that

$$U_t = f(Z_t, \mu_t(U_{t+1}))$$

Intuition

- $\mu_t(.)$ encodes how risk-averse you are: the more risk-averse, the lower $\mu_t(U_{t+1})$ is
- The aggregator measures how much you trade-off payoff today vs keep playing
- But the continuation value is already summarized by $\mu_t(.)$

Intuition

- $\mu_t(.)$ encodes how risk-averse you are: the more risk-averse, the lower $\mu_t(U_{t+1})$ is
- The aggregator measures how much you trade-off payoff today vs keep playing
- But the continuation value is already summarized by $\mu_t(.)$
- If f is linear in the second argument and $\mu_t(U_{t+1}) = \mathbb{E}_t[U_{t+1}]$ we recover expected utility!

Epstein and Zin (1989)

- Epstein and Zin (1989) made the whole setup operational
- They extended Kreps and Porteus (1978) to the infinite horizon case
- Super non-trivial since there is no "end date"... continuation becomes a fixed point problem

Epstein and Zin (1989)

- Epstein and Zin (1989) made the whole setup operational
- They extended Kreps and Porteus (1978) to the infinite horizon case
- Super non-trivial since there is no "end date"... continuation becomes a fixed point problem
- They specialize functional forms:

$$f(x,y) \equiv \left((1-\beta)x^{1-\rho} + \beta y^{1-\rho}\right)^{\frac{1}{1-\rho}}$$
$$\mu_t(U_{t+1}) \equiv \left(\mathbb{E}_t[U_{t+1}^{1-\alpha}]\right)^{\frac{1}{1-\alpha}}$$

- α controls risk aversion, ρ controls intertemporal substitution

Heuristic Derivation of the SDF

Heuristic Derivation of the SDF

- Epstein and Zin (1991) took it to the data and showed how to use the implied SDF
- We will follow a heuristic derivation from François Gourio's lecture notes (see Github)
- We will assume, just to make math clear, that we have a countable state space
- Expectations will become sums weighted by conditional probabilities $\pi_t(s_{t+1})$

Heuristic Derivation of the SDF

- Epstein and Zin (1991) took it to the data and showed how to use the implied SDF
- We will follow a heuristic derivation from François Gourio's lecture notes (see Github)
- We will assume, just to make math clear, that we have a countable state space
- Expectations will become sums weighted by conditional probabilities $\pi_t(s_{t+1})$

$$\mu_t(U_{t+1}) = \left(\sum_{s_{t+1}} \pi_t(s_{t+1})\, U_{t+1}(s_{t+1})^{1-\alpha} \right)^{\frac{1}{1-\alpha}}$$

The Recursion

- Substituting μ_t into f, the Epstein-Zin recursion is:

$$U_t = \left[(1-\beta) C_t^{1-\rho} + \beta \left(\sum_{s_{t+1}} \pi_t(s_{t+1})\, U_{t+1}(s_{t+1})^{1-\alpha} \right)^{\frac{1-\rho}{1-\alpha}} \right]^{\frac{1}{1-\rho}}$$

The Recursion

- Substituting μ_t into f, the Epstein-Zin recursion is:

$$U_t = \left[(1-\beta) C_t^{1-\rho} + \beta \left(\sum_{s_{t+1}} \pi_t(s_{t+1})\, U_{t+1}(s_{t+1})^{1-\alpha} \right)^{\frac{1-\rho}{1-\alpha}} \right]^{\frac{1}{1-\rho}}$$

- Let $q_t(s_{t+1})$ be the time-t price of an Arrow-Debreu security
- If you buy one unit, your utility changes by $\partial U_t / \partial C_{t+1}(s_{t+1})$
- You pay $q_t(s_{t+1})$ and each unit of consumption hurts you by $\partial U_t / \partial C_t(s_t)$

The Recursion

- Substituting μ_t into f, the Epstein-Zin recursion is:

$$U_t = \left[(1-\beta) C_t^{1-\rho} + \beta \left(\sum_{s_{t+1}} \pi_t(s_{t+1})\, U_{t+1}(s_{t+1})^{1-\alpha} \right)^{\frac{1-\rho}{1-\alpha}} \right]^{\frac{1}{1-\rho}}$$

- Let $q_t(s_{t+1})$ be the time-t price of an Arrow-Debreu security
- If you buy one unit, your utility changes by $\partial U_t / \partial C_{t+1}(s_{t+1})$
- You pay $q_t(s_{t+1})$ and each unit of consumption hurts you by $\partial U_t / \partial C_t(s_t)$
- At the margin $\dfrac{\partial U_t}{\partial C_{t+1}(s_{t+1})} = q_t(s_{t+1}) \cdot \dfrac{\partial U_t}{\partial C_t(s_t)}, \forall s_{t+1}, s_t, t$
- For any asset i with return $R_{i,t+1}(s_{t+1})$ in state s_{t+1}, we have

$$\mathbb{E}_t \left[M_{t+1}\, R_{i,t+1} \right] = \sum_{s_{t+1}} \pi_t(s_{t+1})\, M_{t+1}(s_{t+1})\, R_{i,t+1}(s_{t+1}) = \sum_{s_{t+1}} q_t(s_{t+1}) \cdot R_{i,t+1}(s_{t+1}) = 1$$

Marginal Utilities

- Raise both sides of the recursion to the power $1-\rho$:

$$U_t^{1-\rho} = (1-\beta)\, C_t^{1-\rho} + \beta\, \mu_t^{1-\rho}$$

- Differentiate w.r.t. C_t:

$$\frac{\partial U_t}{\partial C_t} = (1-\beta) \left(\frac{C_t}{U_t} \right)^{-\rho}$$

Marginal Utilities

- Raise both sides of the recursion to the power $1-\rho$:

$$U_t^{1-\rho} = (1-\beta)\, C_t^{1-\rho} + \beta\, \mu_t^{1-\rho}$$

- Differentiate w.r.t. C_t:

$$\frac{\partial U_t}{\partial C_t} = (1-\beta)\left(\frac{C_t}{U_t}\right)^{-\rho}$$

- For $C_{t+1}(s_{t+1})$, chain rule: $\dfrac{\partial U_t}{\partial C_{t+1}(s_{t+1})} = \dfrac{\partial U_t}{\partial \mu_t} \cdot \dfrac{\partial \mu_t}{\partial U_{t+1}(s_{t+1})} \cdot \dfrac{\partial U_{t+1}(s_{t+1})}{\partial C_{t+1}(s_{t+1})}$

$$\frac{\partial U_t}{\partial \mu_t} = \beta\left(\frac{\mu_t}{U_t}\right)^{-\rho}, \qquad \frac{\partial \mu_t}{\partial U_{t+1}(s_{t+1})} = \pi_t(s_{t+1})\left(\frac{U_{t+1}(s_{t+1})}{\mu_t}\right)^{-\alpha},$$

$$\frac{\partial U_{t+1}(s_{t+1})}{\partial C_{t+1}(s_{t+1})} = (1-\beta)\left(\frac{C_{t+1}(s_{t+1})}{U_{t+1}(s_{t+1})}\right)^{-\rho}$$

The SDF

The ratio of marginal utilities yields:

$$q_t(s_{t+1}) = \frac{\partial U_t / \partial C_{t+1}(s_{t+1})}{\partial U_t / \partial C_t(s_t)} = \beta \pi_t(s_{t+1}) \left(\frac{C_{t+1}(s_{t+1})}{C_t} \right)^{-\rho} \left(\frac{U_{t+1}(s_{t+1})}{\mu_t} \right)^{\rho - \alpha}$$

- We are left with:

$$M_{t+1}(s_{t+1}) = \beta \left(\frac{C_{t+1}(s_{t+1})}{C_t} \right)^{-\rho} \left(\frac{U_{t+1}(s_{t+1})}{\mu_t} \right)^{\rho - \alpha}$$

The SDF

The ratio of marginal utilities yields:

$$q_t(s_{t+1}) = \frac{\partial U_t / \partial C_{t+1}(s_{t+1})}{\partial U_t / \partial C_t(s_t)} = \beta \pi_t(s_{t+1}) \left(\frac{C_{t+1}(s_{t+1})}{C_t} \right)^{-\rho} \left(\frac{U_{t+1}(s_{t+1})}{\mu_t} \right)^{\rho - \alpha}$$

- We are left with:

$$M_{t+1}(s_{t+1}) = \beta \left(\frac{C_{t+1}(s_{t+1})}{C_t} \right)^{-\rho} \left(\frac{U_{t+1}(s_{t+1})}{\mu_t} \right)^{\rho - \alpha}$$

- When $\alpha = \rho$: the last term vanishes and we recover standard CRRA

$$M_{t+1} = \beta \left(\frac{C_{t+1}}{C_t} \right)^{-\rho}$$

The SDF

The ratio of marginal utilities yields:

$$q_t(s_{t+1}) = \frac{\partial U_t / \partial C_{t+1}(s_{t+1})}{\partial U_t / \partial C_t(s_t)} = \beta \pi_t(s_{t+1}) \left(\frac{C_{t+1}(s_{t+1})}{C_t} \right)^{-\rho} \left(\frac{U_{t+1}(s_{t+1})}{\mu_t} \right)^{\rho - \alpha}$$

- We are left with:

$$M_{t+1}(s_{t+1}) = \beta \left(\frac{C_{t+1}(s_{t+1})}{C_t} \right)^{-\rho} \left(\frac{U_{t+1}(s_{t+1})}{\mu_t} \right)^{\rho - \alpha}$$

- When $\alpha = \rho$: the last term vanishes and we recover standard CRRA

$$M_{t+1} = \beta \left(\frac{C_{t+1}}{C_t} \right)^{-\rho}$$

- Problem: $U_{t+1}(s_{t+1})/\mu_t$ is not directly observable
- We will deal with this later using the return on the "wealth portfolio"

Questions?

The Wealth Portfolio Trick

The Problem

- Recall: we derived

$$M_{t+1}(s_{t+1}) = \beta \left(\frac{C_{t+1}(s_{t+1})}{C_t} \right)^{-\rho} \left(\frac{U_{t+1}(s_{t+1})}{\mu_t} \right)^{\rho-\alpha}$$

- The ratio $U_{t+1}(s_{t+1})/\mu_t$ involves the continuation value — not observable!
- **Idea**: link it to the return on a traded portfolio

The Wealth Portfolio

- Let W_t be total wealth: the value of all future consumption
- Budget constraint (Gourio, Section 3):

$$W_{t+1}(s_{t+1}) = (W_t - C_t)\, R_{a,t+1}(s_{t+1})$$

- Consume C_t out of W_t, invest the rest at the return $R_{a,t+1}$

The Wealth Portfolio

- Let W_t be total wealth: the value of all future consumption
- Budget constraint (Gourio, Section 3):

$$W_{t+1}(s_{t+1}) = (W_t - C_t)\, R_{a,t+1}(s_{t+1})$$

- Consume C_t out of W_t, invest the rest at the return $R_{a,t+1}$
- By homotheticity of EZ preferences: U_t is homogeneous of degree 1 in W_t
- Value function takes the form $U_t = \phi(s_t)\, W_t$, i.e., ϕ depends on the state, not on wealth

Using Homogeneity

- Using $U_{t+1}(s_{t+1}) = \phi(s_{t+1})\,(W_t - C_t)\,R_{a,t+1}(s_{t+1})$:

$$\frac{U_{t+1}(s_{t+1})}{\mu_t} = \frac{\phi(s_{t+1})\,R_{a,t+1}(s_{t+1})}{\left(\mathbb{E}_t\left[\phi(s_{t+1})^{1-\alpha}\,R_{a,t+1}(s_{t+1})^{1-\alpha}\right]\right)^{\frac{1}{1-\alpha}}}$$

- Note: $(W_t - C_t)$ is known at t and cancels immediately

Using Homogeneity

- Using $U_{t+1}(s_{t+1}) = \phi(s_{t+1})\,(W_t - C_t)\,R_{a,t+1}(s_{t+1})$:

$$\frac{U_{t+1}(s_{t+1})}{\mu_t} = \frac{\phi(s_{t+1})\,R_{a,t+1}(s_{t+1})}{\left(\mathbb{E}_t\left[\phi(s_{t+1})^{1-\alpha}\,R_{a,t+1}(s_{t+1})^{1-\alpha}\right]\right)^{\frac{1}{1-\alpha}}}$$

- Note: $(W_t - C_t)$ is known at t and cancels immediately
- But $\phi(s_{t+1})$ is **random** — it does not cancel!
- We need one more step...

Pinning Down ϕ

- Define $\Phi_t \equiv \left(\mathbb{E}_t\left[(\phi(s_{t+1})\, R_{a,t+1})^{1-\alpha}\right]\right)^{1/(1-\alpha)}$, so $\mu_t = (W_t - C_t)\,\Phi_t$
- FOC for C_t (optimality of consumption-savings):

$$(1-\beta)\, C_t^{-\rho} = \beta\,(W_t - C_t)^{-\rho}\,\Phi_t^{1-\rho}$$

Pinning Down ϕ

- Define $\Phi_t \equiv \left(\mathbb{E}_t\left[(\phi(s_{t+1})\, R_{a,t+1})^{1-\alpha}\right]\right)^{1/(1-\alpha)}$, so $\mu_t = (W_t - C_t)\,\Phi_t$
- FOC for C_t (optimality of consumption-savings):

$$(1-\beta)\, C_t^{-\rho} = \beta\,(W_t - C_t)^{-\rho}\,\Phi_t^{1-\rho}$$

- Substitute the FOC into the recursion $U_t^{1-\rho} = (1-\beta)C_t^{1-\rho} + \beta(W_t - C_t)^{1-\rho}\Phi_t^{1-\rho}$:

$$\phi(s_t)^{1-\rho}\, W_t^{1-\rho} = (1-\beta)\, C_t^{-\rho}\, W_t \implies \phi(s_t)^{1-\rho} = (1-\beta)\left(\frac{W_t}{C_t}\right)^{\rho}$$

The Key Identity

- Same relation at $t+1$: $\phi(s_{t+1})^{1-\rho} = (1-\beta)(W_{t+1}/C_{t+1})^{\rho}$
- FOC rearranged: $\Phi_t^{1-\rho} = \frac{1-\beta}{\beta}\left(\frac{W_t - C_t}{C_t}\right)^{\rho}$
- Take the ratio and use $R_{a,t+1} = W_{t+1}/(W_t - C_t)$:

$$\frac{\phi(s_{t+1})^{1-\rho}}{\Phi_t^{1-\rho}} = \beta\, R_{a,t+1}^{\rho}\left(\frac{C_t}{C_{t+1}}\right)^{\rho}$$

The Key Identity

- Same relation at $t+1$: $\phi(s_{t+1})^{1-\rho} = (1-\beta)(W_{t+1}/C_{t+1})^{\rho}$
- FOC rearranged: $\Phi_t^{1-\rho} = \frac{1-\beta}{\beta}\left(\frac{W_t - C_t}{C_t}\right)^{\rho}$
- Take the ratio and use $R_{a,t+1} = W_{t+1}/(W_t - C_t)$:

$$\frac{\phi(s_{t+1})^{1-\rho}}{\Phi_t^{1-\rho}} = \beta\, R_{a,t+1}^{\rho}\left(\frac{C_t}{C_{t+1}}\right)^{\rho}$$

- Since $\left(\frac{U_{t+1}}{\mu_t}\right)^{1-\rho} = \frac{\phi(s_{t+1})^{1-\rho}}{\Phi_t^{1-\rho}}\, R_{a,t+1}^{1-\rho}$:

$$\boxed{\left(\frac{U_{t+1}}{\mu_t}\right)^{1-\rho} = \beta\left(\frac{C_{t+1}}{C_t}\right)^{-\rho} R_{a,t+1}}$$

- All ϕ terms have cancelled!

The Epstein-Zin SDF

- Define $\theta \equiv \dfrac{1-\alpha}{1-\rho}$, and note $\rho - \alpha = (1-\rho)(\theta - 1)$
- Raise the key identity to power $\theta - 1$:

$$\left(\frac{U_{t+1}}{\mu_t}\right)^{\rho-\alpha} = \beta^{\theta-1}\left(\frac{C_{t+1}}{C_t}\right)^{-\rho(\theta-1)} R_{a,t+1}^{\theta-1}$$

The Epstein-Zin SDF

- Define $\theta \equiv \dfrac{1-\alpha}{1-\rho}$, and note $\rho - \alpha = (1-\rho)(\theta - 1)$
- Raise the key identity to power $\theta - 1$:

$$\left(\frac{U_{t+1}}{\mu_t}\right)^{\rho-\alpha} = \beta^{\theta-1}\left(\frac{C_{t+1}}{C_t}\right)^{-\rho(\theta-1)} R_{a,t+1}^{\theta-1}$$

- Substitute into $M_{t+1} = \beta(C_{t+1}/C_t)^{-\rho}(U_{t+1}/\mu_t)^{\rho-\alpha}$:

$$\boxed{M_{t+1} = \beta^{\theta}\left(\frac{C_{t+1}}{C_t}\right)^{-\rho\,\theta} R_{a,t+1}^{\theta-1}}$$

The Epstein-Zin SDF

- Define $\theta \equiv \dfrac{1-\alpha}{1-\rho}$, and note $\rho - \alpha = (1-\rho)(\theta - 1)$
- Raise the key identity to power $\theta - 1$:

$$\left(\frac{U_{t+1}}{\mu_t}\right)^{\rho-\alpha} = \beta^{\theta-1}\left(\frac{C_{t+1}}{C_t}\right)^{-\rho(\theta-1)} R_{a,t+1}^{\theta-1}$$

- Substitute into $M_{t+1} = \beta(C_{t+1}/C_t)^{-\rho}(U_{t+1}/\mu_t)^{\rho-\alpha}$:

$$\boxed{M_{t+1} = \beta^{\theta}\left(\frac{C_{t+1}}{C_t}\right)^{-\rho\,\theta} R_{a,t+1}^{\theta-1}}$$

- $\alpha = \rho$ $(\theta = 1)$: $M_{t+1} = \beta\left(\frac{C_{t+1}}{C_t}\right)^{-\rho}$ — standard CRRA
- $\alpha \neq \rho$: SDF depends on consumption growth **and** the wealth return

Meeting the Data

Meeting the Data

- Empirically, what is the return on the wealth portfolio?
- The wealth W_t is the price of the whole (optimal) consumption stream

$$W_t = c_t + \mathbb{E}_t[M_{t+1}W_{t+1}] = \sum_{i=0}^{\infty} \mathbb{E}_t \left[\left(\prod_{j=0}^{i} M_{t+j} \right) c_{t+i} \right], \qquad M_0 = 1$$

- Think about W_t as the amount of money you need today to sustain your optimal consumption stream

Meeting the Data

- Empirically, what is the return on the wealth portfolio?
- The wealth W_t is the price of the whole (optimal) consumption stream

$$W_t = c_t + \mathbb{E}_t[M_{t+1}W_{t+1}] = \sum_{i=0}^{\infty} \mathbb{E}_t \left[\left(\prod_{j=0}^{i} M_{t+j} \right) c_{t+i} \right], \qquad M_0 = 1$$

- Think about W_t as the amount of money you need today to sustain your optimal consumption stream
- That *has* to include human capital, real estate, money you expect to inherit, etc.
- Not only financial wealth like stocks and bonds!
- Measuring $R_{a,t+1}$ is super tricky (impossible?)!

GMM Strikes Back

- In Epstein and Zin (1991) there are N risky assets
- The consumer forms optimal portfolios of these assets
- The return of the optimal portfolio is $R_{a,t+1}$

GMM Strikes Back

- In Epstein and Zin (1991) there are N risky assets
- The consumer forms optimal portfolios of these assets
- The return of the optimal portfolio is $R_{a,t+1}$

For any asset i:

$$\mathbb{E}_t\left[M_{t+1}R_{i,t+1}\right] = \beta^\theta \mathbb{E}_t\left[\left(\frac{C_{t+1}}{C_t}\right)^{-\rho\,\theta} R_{a,t+1}^{\theta-1} R_{i,t+1}\right] = 1$$

- If we observe returns, we GMM our way to estimate all parameters!
- Important: risk premia will stem from *both* correlation with consumption growth and correlation with $R_{a,t+1}$

Empirical Implementation

- Epstein and Zin (1991) used the NYSE value-weighted return as a proxy for $R_{a,t+1}$
- Also 5 stock indices from different industries as the other assets + risk-free bond
- Estimate everything using GMM with different instruments (see the paper)
- Whenever looking at results like these, take care with different parametrizations!!!

Estimates

	1959:4–1986:12			1959:4–1978:12		
	INST1	INST2	INST3	INST1	INST2	INST3
			Nondurables			
$\delta = (1/\beta) - 1$	.0033	.0033	-.0015	.0006	.0006	-.0040
	(.0018)	(.0018)	(.0036)	(.0031)	(.0031)	(.0065)
γ $(= \alpha/\rho)$	-.0108	-.0146	-.0235	-.0122	-.0122	-.0065
	(.0564)	(.0564)	(.0746)	(.0659)	(.0659)	(.0889)
$\sigma = 1/(1-\rho)$ (EIS)	.8652	.8158	.1754	.8499	.7973	.2392
	(.5429)	(.5021)	(.0728)	(.6391)	(.5948)	(.0950)
1 - α (Risk aversion)	.0016	.0033	.1106	.0052	.0031	.0207
	(.0127)	(.0182)	(.3402)	(.0307)	(.0251)	(.2790)
$J(12)$	19.04	24.20	8.054	18.54	18.69	10.22
	[.088]	[.019]	[.781]	[.100]	[.096]	[.597]
$J(13) - J(12)$	157.17	165.73	7.941	141.46	148.39	6.760
	[.000]	[.000]	[.005]	[.000]	[.000]	[.009]
GH(15)				16.40	15.40	17.94
				[.356]	[.423]	[.266]

Can Kreps-Porteus Preferences Solve the Equity Premium Puzzle?

- Epstein and Zin (1991) didn't answer this question. Weil (1989) tried to answer it.
- A Lucas-tree economy with two states, one risky asset, like Mehra and Prescott (1985)
- Main change: EZ preferences so we can play with risk aversion *and* intertemporal substitution
- Calibration followed Mehra and Prescott (1985)

Can Kreps-Porteus Preferences Solve the Equity Premium Puzzle?

- Epstein and Zin (1991) didn't answer this question. Weil (1989) tried to answer it.
- A Lucas-tree economy with two states, one risky asset, like Mehra and Prescott (1985)
- Main change: EZ preferences so we can play with risk aversion *and* intertemporal substitution
- Calibration followed Mehra and Prescott (1985)

Two major insights from Weil (1989):

- If consumption has i.i.d growth, even with EZ preferences, you cannot solve the puzzle
- With the Markov Chain calibration from Mehra and Prescott (1985), we still need high risk aversion and crazy small EIS

Take a look

Net risk premium and net risk-free rate[a] ($\beta = 0.95$).

EIS	CRRA (γ)						
$1/\rho$)	0	0.5	1	5	10	20	45
∞	0 00	0.05	0.10	0.48	0.94	1 77	3 01
	5.25	**5.24**	**5.21**	**5.01**	**4.78**	**4.40**	**4.09**
2	0.01	0 06	0.11	0.51	1 01	1.89	3 14
	6.20	**6.16**	**6.12**	**5.79**	**5.40**	**4.73**	**3.93**
1	0 01	0.07	0 12	0.55	1.08	2.00	3 27
	7.14	**7.08**	**7.03**	**6.56**	**6.02**	**5.06**	**3.76**
0.2	0.10	0.18	0 26	0 88	1.64	2 91	4.34
	15.02	**14.81**	**14.61**	**13.02**	**11.11**	**7.75**	**2.45**
0.1	0.24	0.35	0.45	1.31	2.33	4.04	5 72
	25.73	**25.32**	**24.96**	**21.68**	**17.87**	**11.23**	**0.85**
0.05	0 56	0 72	0 87	2.12	3 66	6.25	8 66
	50.51	**49.55**	**48.61**	**41.26**	**32.80**	**18.65**	**− 2.23**
1/45	1.13	1.36	1.60	3.58	6.22	11.22	17.11
	138.91	**135.56**	**132.25**	**107.44**	**80.69**	**40.39**	**− 9.22**

[a] In percent The bold number is the net risk-free rate.

Equity Risk Premium and Risk-Free Rate (Bold)

EIS	CRRA (γ)						
$1/\rho$	0	0.5	1	5	10	20	45
∞	0.00	0.05	0.10	0.48	0.94	1.77	3.01
	5.25	**5.24**	**5.21**	**5.01**	**4.78**	**4.40**	**4.09**
2	0.01	0.06	0.11	0.51	1.01	1.89	3.14
	6.20	**6.16**	**6.12**	**5.79**	**5.40**	**4.73**	**3.93**
1	0.01	0.07	0.12	0.55	1.08	2.00	3.27
	7.14	**7.08**	**7.03**	**6.56**	**6.02**	**5.06**	**3.76**
0.2	0.10	0.18	0.26	0.88	1.64	2.91	4.34
	15.02	**14.81**	**14.61**	**13.02**	**11.11**	**7.75**	**2.45**
0.1	0.24	0.35	0.45	1.31	2.33	4.04	5.72
	25.73	**25.32**	**24.96**	**21.68**	**17.87**	**11.23**	**0.85**
0.05	0.56	0.72	0.87	2.12	3.66	6.25	8.66
	50.51	**49.55**	**48.61**	**41.26**	**32.80**	**18.65**	**-2.23**
$1/45$	1.13	1.36	1.60	3.58	6.22	11.22	17.11
	138.91	**135.56**	**132.25**	**107.44**	**80.69**	**40.39**	**-9.22**

The Way Forward

Two fundamental problems:

- there is not enough individual consumption risk[24] in this economy to explain why, if agents are only moderately risk-averse, the risk premium is so high;
- the average rate of growth of individual consumption is too high (1.8% per year) to be consistent, if agents are extremely averse to intertemporal substitution, with the very low risk-free rate.

The Way Forward

Two fundamental problems:

- there is not enough individual consumption risk[24] in this economy to explain why, if agents are only moderately risk-averse, the risk premium is so high;
- the average rate of growth of individual consumption is too high (1.8% per year) to be consistent, if agents are extremely averse to intertemporal substitution, with the very low risk-free rate.

- How to increase risk in consumption growth: disasters, long-run risks, models with job loss ...
- Or introduce very imperfect insurance markets (e.g. incomplete markets, borrowing constraints, ...)
- Another idea: heterogenous shocks across the population

The Way Forward

Two fundamental problems:

- there is not enough individual consumption risk[24] in this economy to explain why, if agents are only moderately risk-averse, the risk premium is so high;
- the average rate of growth of individual consumption is too high (1.8% per year) to be consistent, if agents are extremely averse to intertemporal substitution, with the very low risk-free rate.

- How to increase risk in consumption growth: disasters, long-run risks, models with job loss ...
- Or introduce very imperfect insurance markets (e.g. incomplete markets, borrowing constraints, ...)
- Another idea: heterogenous shocks across the population
- Next class: long-run risks!

Questions?

Readings and References i

- Campbell, Chap. 6

Epstein, Larry, and Stanley Zin. 1989. "Substitution, Risk Aversion, and the Temporal Behavior of Consumption and Asset Returns: A Theoretical Framework." *Econometrica* 57 (4): 937–69. https://EconPapers.repec.org/RePEc:ecm:emetrp:v:57:y:1989:i:4:p:937-69.

———. 1991. "Substitution, Risk Aversion, and the Temporal Behavior of Consumption and Asset Returns: An Empirical Analysis." *Journal of Political Economy* 99 (2): 263–86. https://doi.org/10.1086/261750.

Kreps, David M., and Evan L. Porteus. 1978. "Temporal Resolution of Uncertainty and Dynamic Choice Theory." *Econometrica* 46 (1): 185. https://doi.org/10.2307/1913656.

Mehra, Rajnish, and Edward C. Prescott. 1985. "The Equity Premium: A Puzzle." *Journal of Monetary Economics* 15 (2): 145–61. https://doi.org/10.1016/0304-3932(85)90061-3.

Weil, Philippe. 1989. "The Equity Premium Puzzle and the Risk-Free Rate Puzzle." *Journal of Monetary Economics* 24 (3): 401–21. https://doi.org/10.1016/0304-3932(89)90028-7.