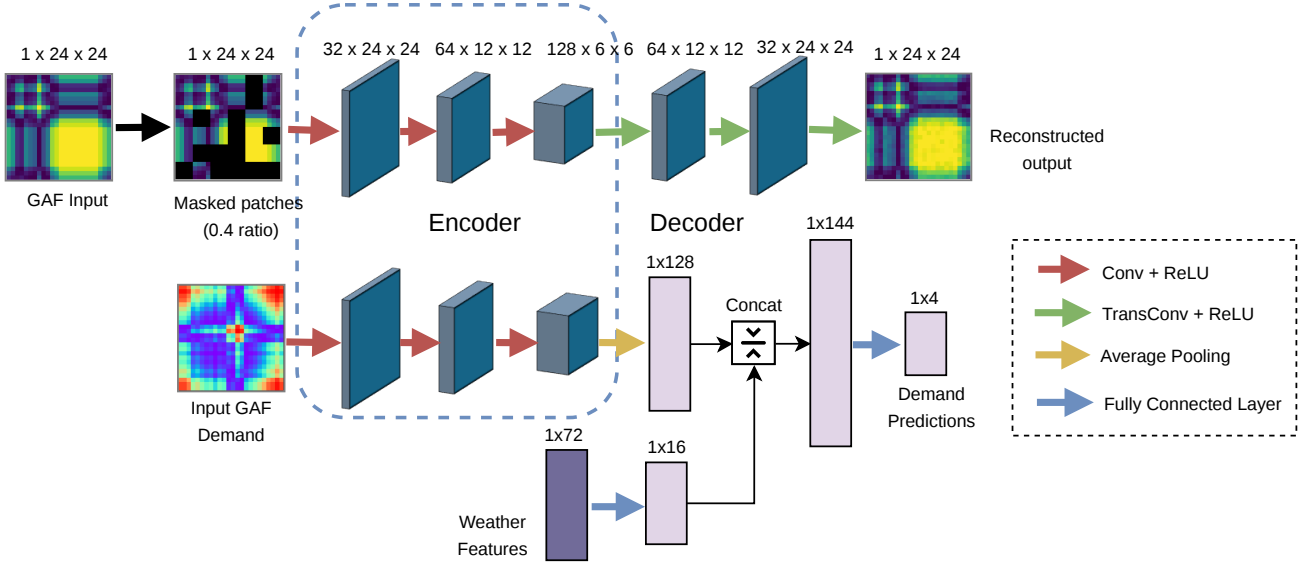
1 x 24 x 24
GAF Input
1 x 24 x 24
Masked patches
(0.4 ratio)
32 x 24 x 24
64 x 12 x 12
128 x 6 x 6
64 x 12 x 12
32 x 24 x 24
1 x 24 x 24
Reconstructed
output
Encoder
Decoder
Input GAF
Demand
1x128
Concat
1x144
1x4
Demand
Predictions
1x72
1x16
Weather
Features
Conv + ReLU
TransConv + ReLU
Average Pooling
Fully Connected Layer