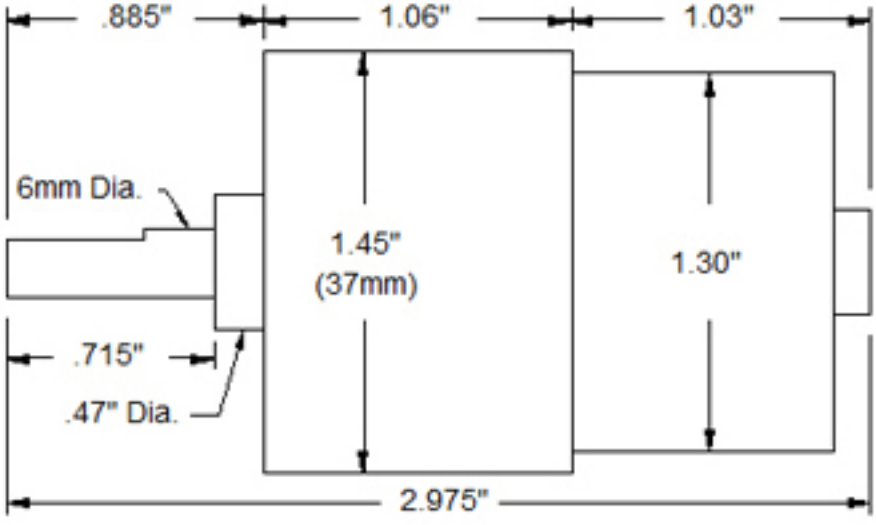
.885"
1.06"
1.03"
6mm Dia.
1.45"
(37mm)
1.30"
.715"
.47" Dia.
2.975"

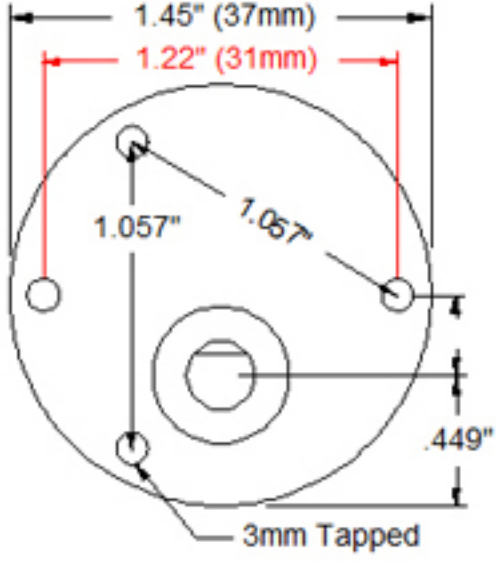
1.45" (37mm)
1.22" (31mm)
1.057"
1.057"
.449"
3mm Tapped