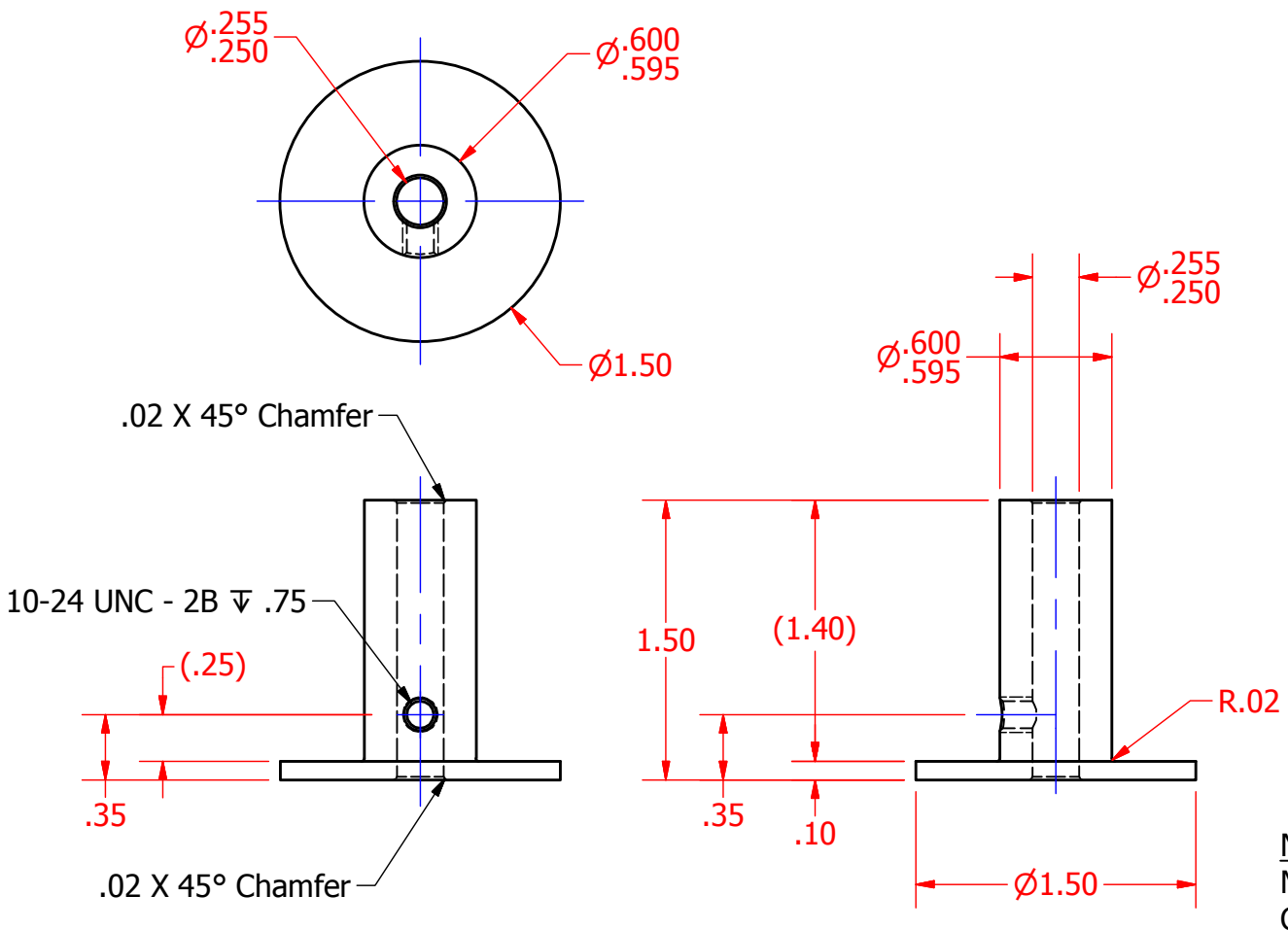

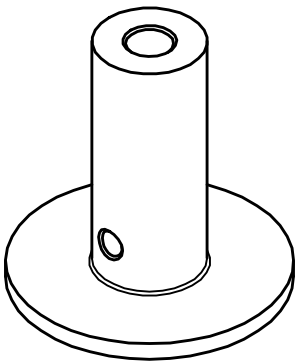

NOTES
Material to be Aluminum - Anodized
Grades TBD

DRAWN MSMaxwell	2/3/2016	4 - Pellon Mount.ipt
CHECKED		TITLE
QA		4 - Pellon Mount
MFG		
APPROVED		SIZE A / DWG NO 1212094a / REV
		SCALE / SHEET 1 OF 1