NOTES:

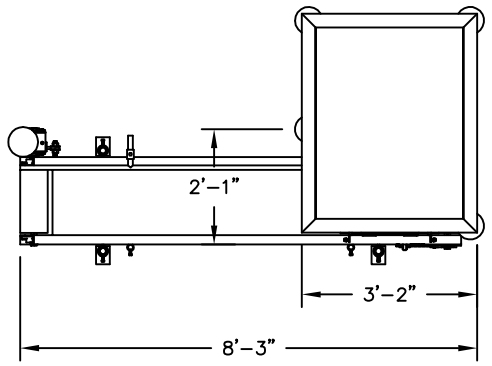

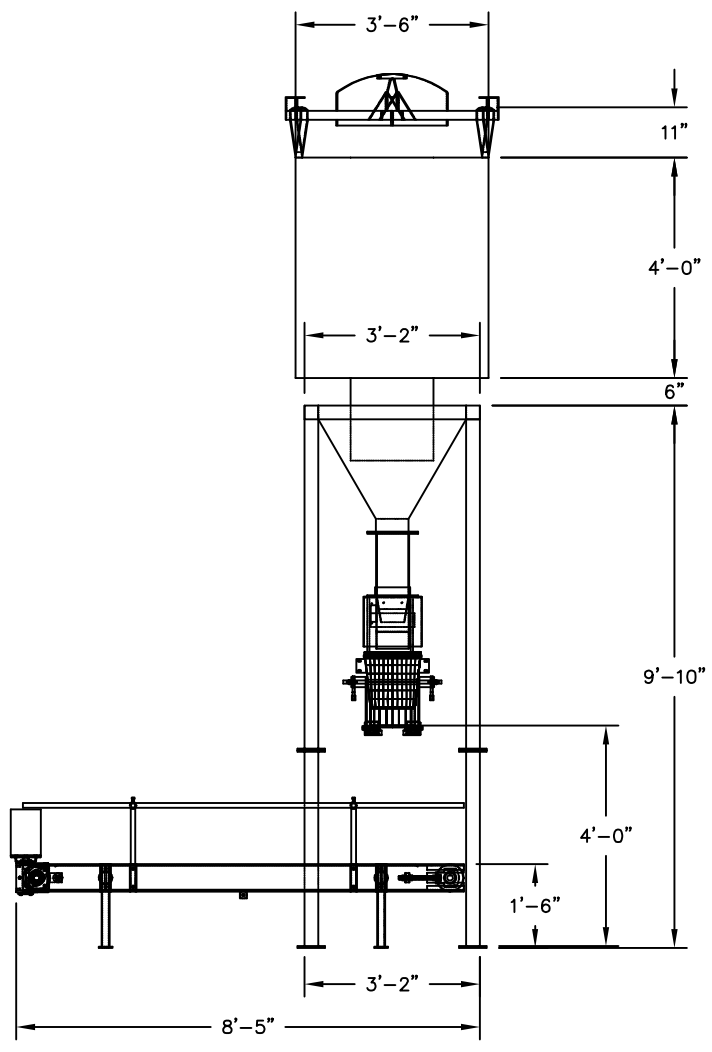

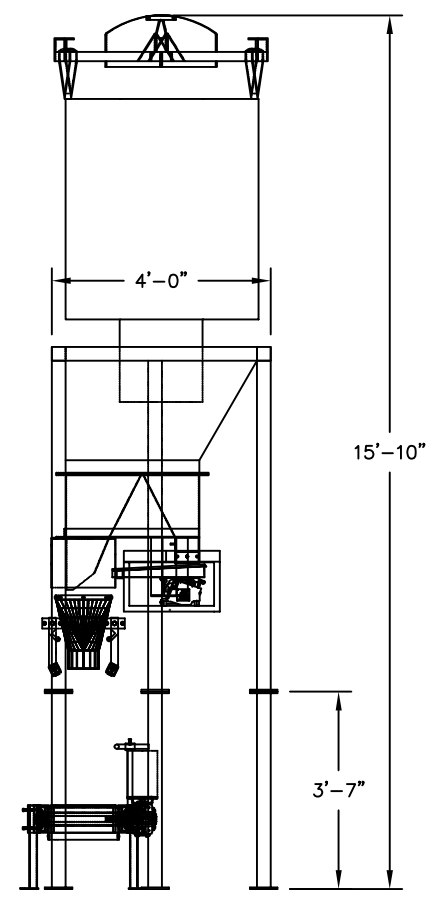

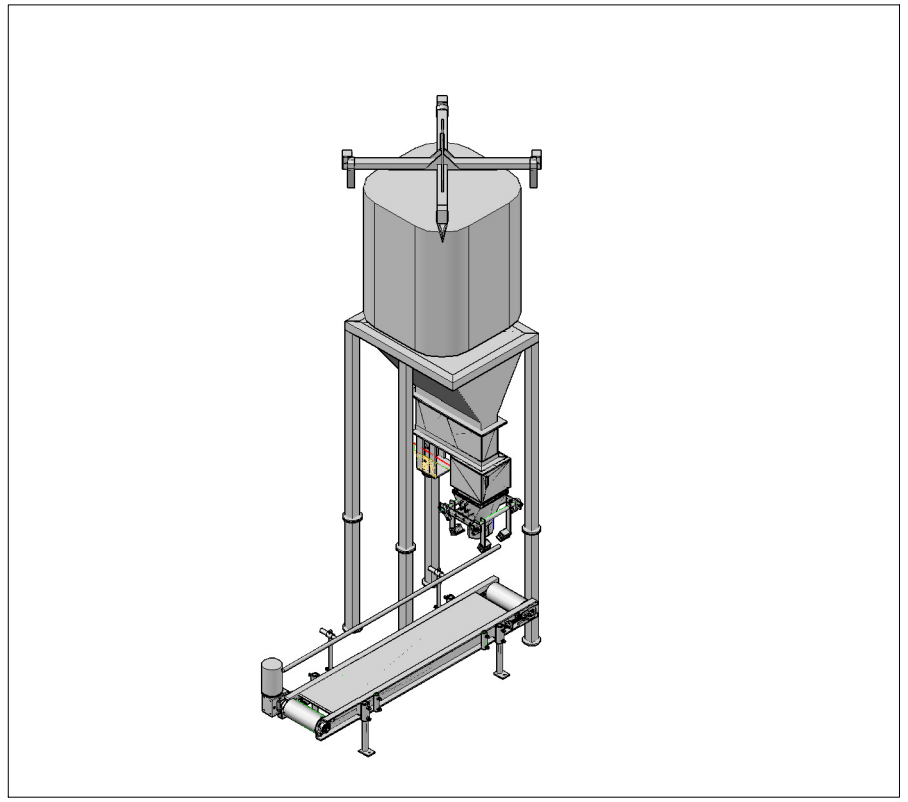

FOR REFERENCE ONLY

REVISIONS			
NO.	DATE	BY	DESCRIPTION
A	11/23/09	JLYLE	NEW DESIGN

CUSTOMER

TRAM CHEMICALS

SHIP TO:

NOTE: THIS DRAWING AND ALL DESIGNS, DETAILS INVENTIONS AND/OR DEVELOPMENTS COVERED ARE CONFIDENTIAL AND THE EXCLUSIVE PROPERTY OF CHOICE BAGGING EQUIPMENT LTD. WHICH RESERVES ALL PATENT AND OTHER RIGHTS. IT IS NOT TO BE PRINTED, PHOTOGRAPHED, COPIED, LOANED OR USED WITHOUT PERMISSION. IT MUST BE RETURNED ON REQUEST AND USED SUBJECT TO THE ABOVE CONDITIONS AND ONLY ON WORK AUTHORIZED BY CHOICE BAGGING EQUIPMENT LTD.

CHOICE BAGGING EQUIPMENT, LTD.
2551 HIGHWAY 95 , P.O. BOX 81
TAYLOR, TX 76574
Phone: (512) 352-3694
Fax: (512) 352-8958
Website: www.valvebagfiller.com
Email: sales@valvebagfiller.com

GWB-GV

GRAVITY VIBRATORY WEIGH BAGGER

SHEET	DRAWING BY:	CHECKED BY:	DATE	SCALE	DRAWING NO.	REV.
1 OF 1	JLYLE		11/23/09	N.T.S.		A