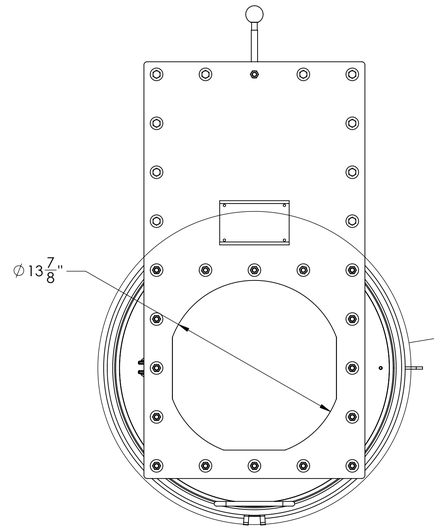

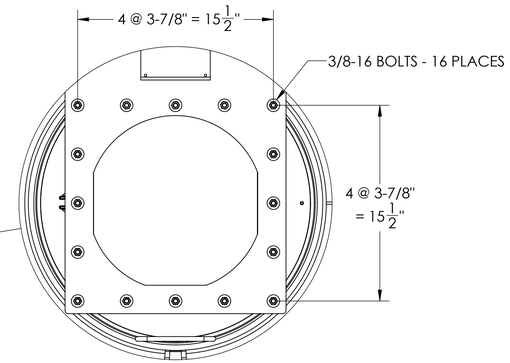

DETAIL A

ITEM NO.	PART NUMBER	DESCRIPTION	R90001.014/Rhino Drum 14"/QTY.
1	R22052.014	14" x 14" Sealed Slidegate	1
2	R22051.014	Rhino Drum Kit Cover 14	1
3	R22053.014	Rhino 14" Slip Collar	1
4	Rhino Drum Container	EXP. PROOF, 55GAL, DRUM	1
5	430054.010 - RHINO DOLLY	EXP. PROOF DRUM DOLLY, 55GAL	1

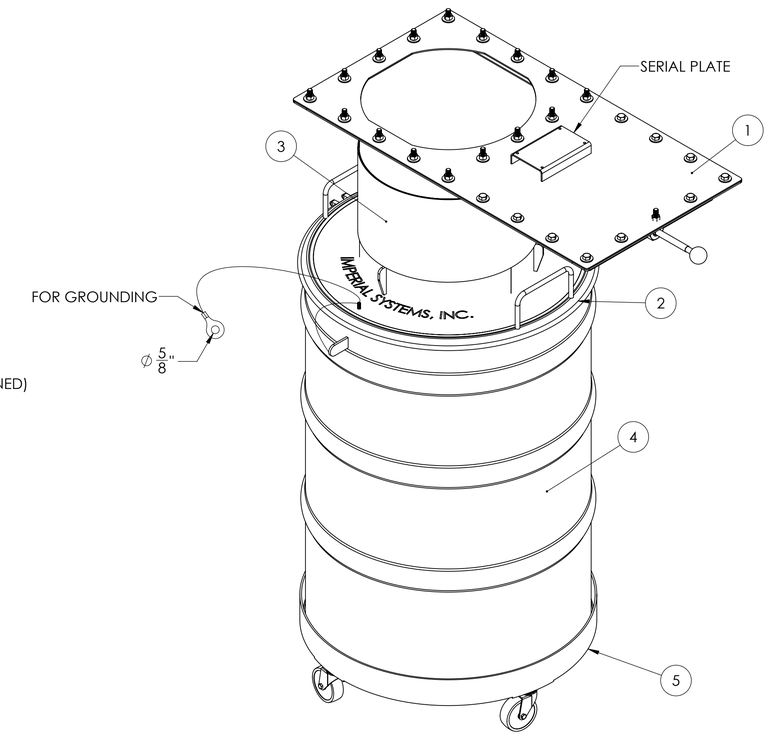

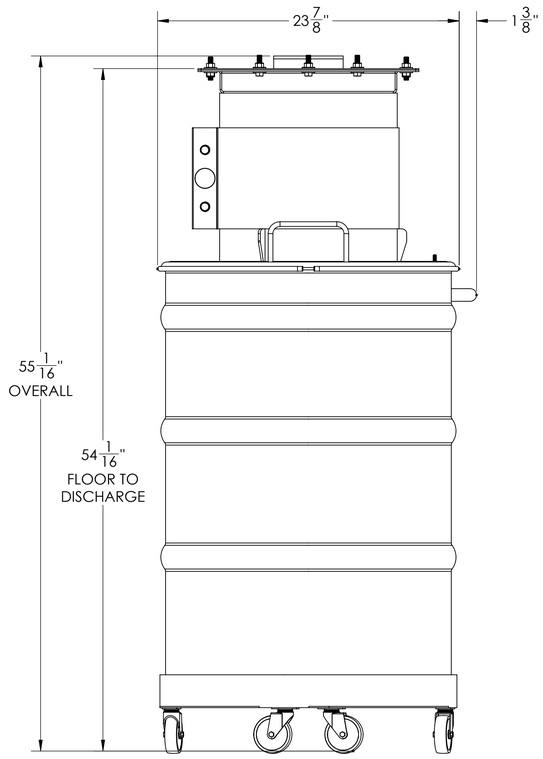

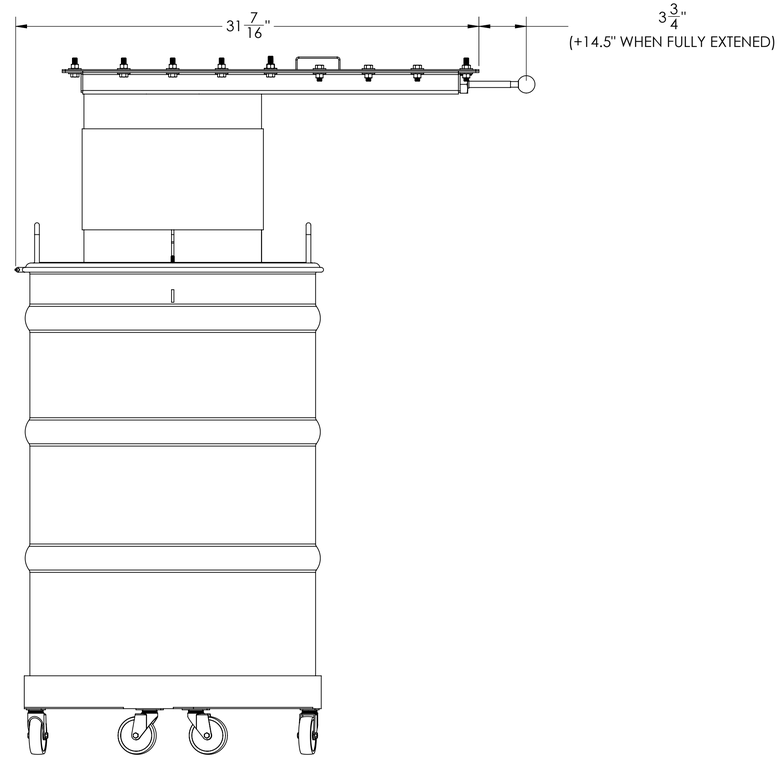

APPROVAL DRAWING ONLY
NOT FOR PRODUCTION

APPROVED:_____ DATE:_____ ☐

APPROVED AS NOTED:_____ DATE:_____ ☐

THIS IS A TIME-SENSITIVE DOCUMENT. ENGINEERING & PRODUCTION CAN NOT BE SCHEDULED UNTIL A SIGNED APPROVAL DRAWING IS RETURNED. DELAYS IN THE APPROVAL PROCESS MAY AFFECT THE QUOTED DELIVERY DATE. THIS DRAWING SUPERCEDES ANY PREVIOUS REVISIONS.

CONFIDENTIAL: ALL OF THE INFORMATION SHOWN HEREIN IS THE PROPERTY OF IMPERIAL SYSTEMS INC. AND IS SUBMITTED ONLY ON A CONFIDENTIAL BASIS. THE RECIPIENT AGREES THAT NO DISCLOSURE OF THIS INFORMATION WILL BE MADE TO A THIRD PARTY WITHOUT WRITTEN CONSENT OF IMPERIAL SYSTEMS INC.

NOTE:
EXPLOSION TESTED TO 7 PSI
MEETS STANDARDS FOR NFPA 69/654
FINISH:
ALL SHARP EDGE BE ROUNDED TO A SMOOTH RADIUS.
ALL BURRS, WELD SPLATTER AND ALL OTHERS SHARP SURFACE PROJECTION SHALL BE GROUND SMOOTH.
PAINT: REFER TO MANUFACTURED EQUIPMENT LIST

TITLE: 55 GAL. RHINO DRUM KIT
14" SLIDE GATE
SALES DRAWING

CUST: _____

JOB # - _____

IMPERIAL SYSTEMS, INC.
7320 West Market St.
Mercer, PA 16137
PHONE: 724-662-2801
FAX: 724-662-2803
www.isystemsweb.com

DRAWN BY:	CHECKED BY:	DATE:	SHEET:	DRAWING:
AML		5/17/2021	01 OF 01	R90001.014