ITEM	QTY	DESCRIPTION	MATERIAL	PART NUMBER	REV
1	1	INSTRUMENT PLATE 2-WAY DIVERT/CONVERGE VALVE 120 VAC	CS	53-0-05955	B
2	1	INSTRUMENT PLATE MOUNT Ø8" SCH 40 DIVERTER	304 SS	52-2-10179	
3	3	GROOVED PIPE END 8" SCH 40 X 2" LG	304 SS	22-3-0233-40	A
4	1	VALVE PINCH DIVERT/CONVERGE 8" 45° BASE ASSEMBLY	304 SS M.C.	93-0-19492	
5	4	COUPLER 8" GROOVED PIPE BLACK EPDM SEAT	GALV.	905-10044	

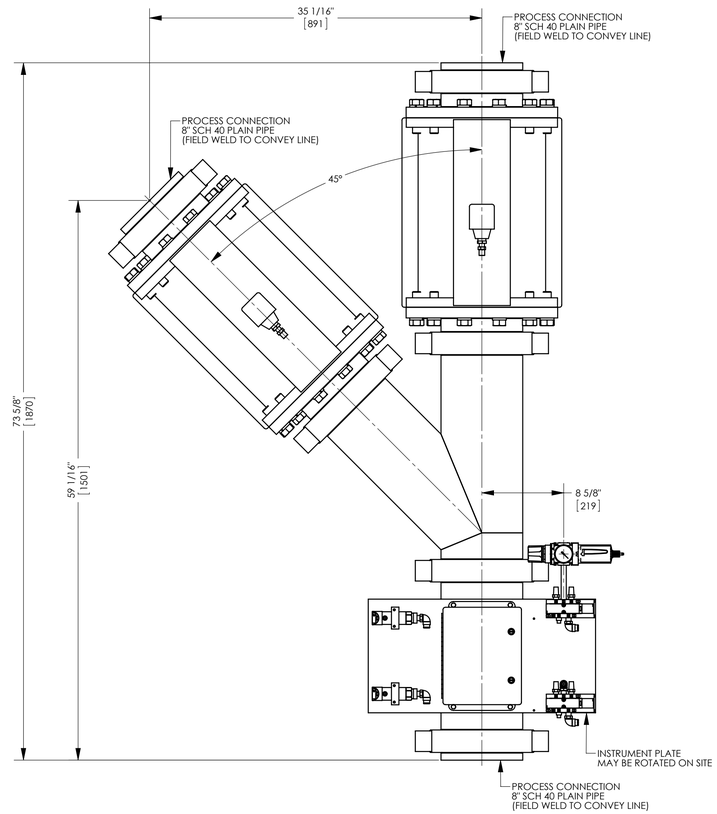

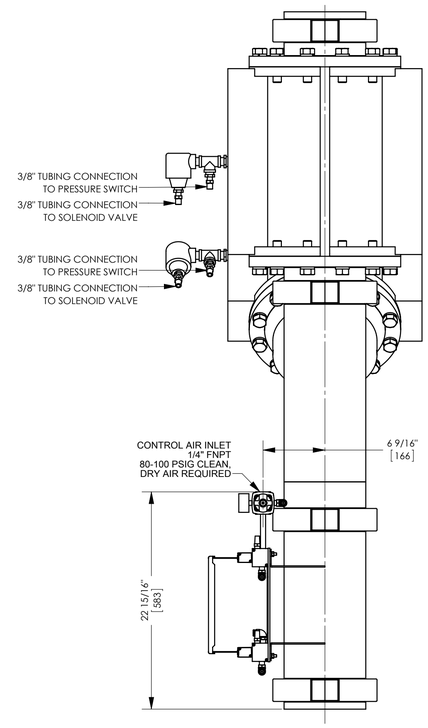

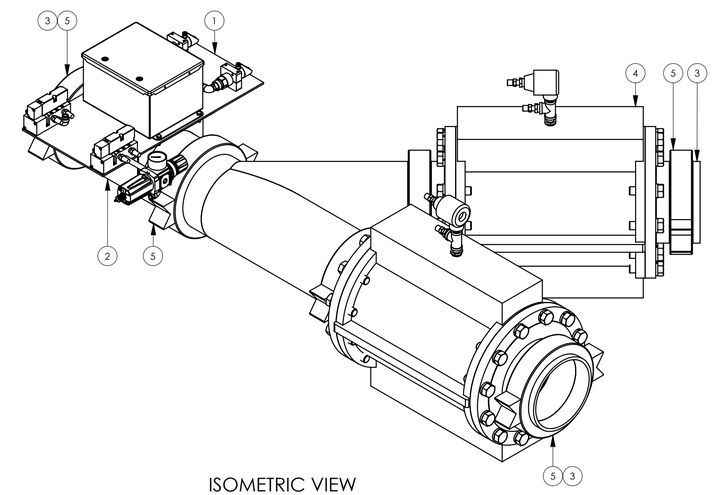

ISOMETRIC VIEW
SCALE 1:8

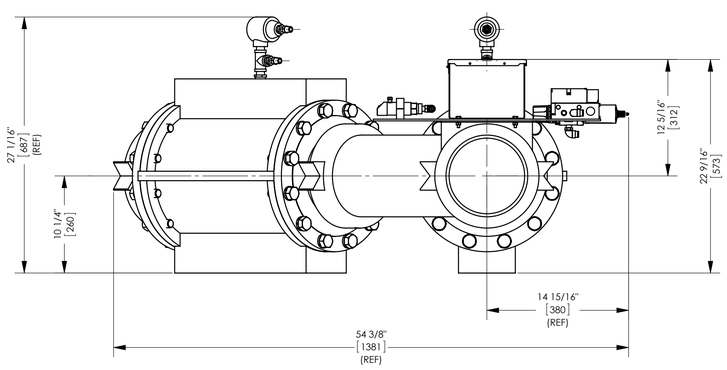

NOTES:
1) ANY PART NOT CALLED OUT IN THE BILL OF MATERIALS IS TO BE PROVIDED BY OTHERS
2) REFERENCE PNEUMATIC SCHEMATIC PS-00001
3) REFERENCE EQUIPMENT ID OR DRAWING LIST FOR PAINT SPECIFICATIONS
4) APPROXIMATE WEIGHT: 1,200 LBS

REVISIONS

REV.	DESCRIPTION	DATE
A	REVISED INSTRUMENT PLATE TO SWITCH OUT OBSOLETED SOLENOID VALVE	9/27/2016

DRAWN BY	CSP	SCALE	1:8
CHK'D BY	GP	DATE	02/25/2016
SIZE	D	FINISH	

cyclonaire CORPORATION
2922 N. DIVISION AVE.
YORK, NEBR. 68467

VALVE PINCH DIVERT/CONVERGE
8" SCH 40 PP X 45° 120 VAC

MAT'L: 304 SS M.C.

DWG # 54-0-19491 | SHEET 1 OF 1 | REV. A

THIS DRAWING IS THE PROPERTY OF CYCLONAIRE CORPORATION SUBMITTED TO THE RECIPIENT IN CONFIDENCE AND SHALL NOT BE COPIED IN ANY MANNER NOR DISCLOSED TO ANY OUTSIDE PARTY WITHOUT THE WRITTEN CONSENT OF THIS COMPANY AND SHALL BE RETURNED ON REQUEST. ALL RIGHTS RESERVED.

TOLERANCE
UNLESS OTHERWISE NOTED
X.X = ± 1/16
X.XX = ± .005
ANGLES = ± 1°