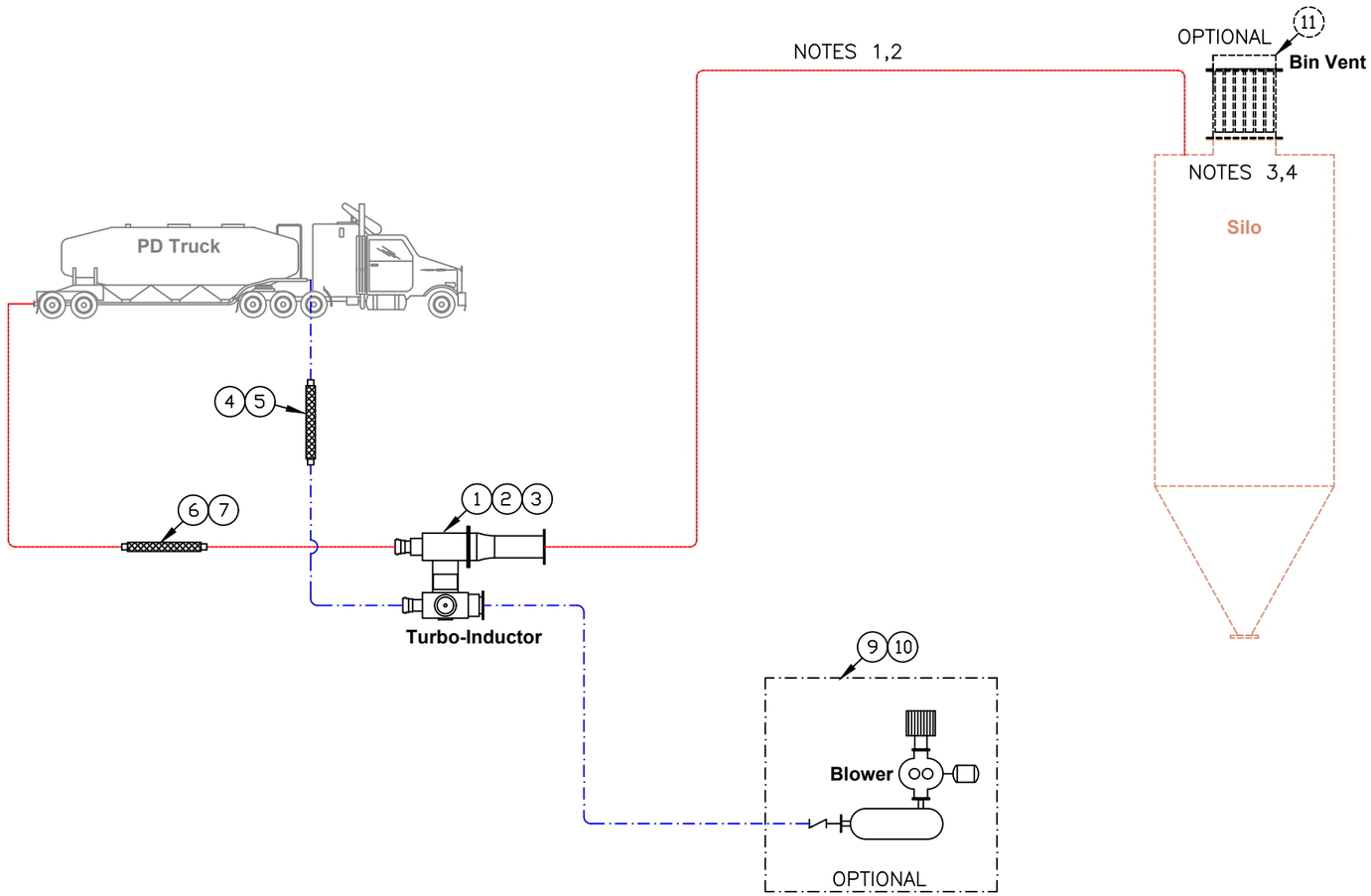

SYSTEM COMPONENTS:
1. 6/8 TURBO-INDUCTOR W/ ADAPTERS
4. 3" AIR SUPPLY HOSE W/ QUICK-COUPLINGS - 20' LONG
5. 4" AIR SUPPLY HOSE W/ QUICK-COUPLINGS - 20' LONG
6. 5" MATERIAL DISCHARGE HOSE W/ QUICK-COUPLINGS - 15' LONG
7. 6" MATERIAL DISCHARGE HOSE W/ QUICK-COUPLINGS - 15' LONG

OPTIONAL COMPONENTS:
9. 1300 SCFM BLOWER
10. MOTOR STARTER (SOFT)
11. BIN VENT DUST COLLECTOR

NOTES:
1. PIPING/CHUTES/SPOOL SECTIONS BY OTHERS.
2. INSTALLATION BY OTHERS INCLUDING FOUNDATIONS, EQUIPMENT PADS, AND PIPE SUPPORT ASSEMBLIES/STRUCTURES.
3. DUST COLLECTION EXHAUST FOR TERMINAL POINT VESSELS BY OTHER. QUOTED UNDER OPTIONAL COMPONENTS.
4. PLANT COMPRESSED AIR (95 TO 100 PSIG) REQUIRED FOR FILTRATION MEDIA CLEANING.

Pressure
Gravity
Vacuum
Motive Air
Filtered Air
Exhaust (Non-Filtered) Air

Cyclonaire Supplied Equipment
Existing Equipment
New Equipment (By Others)

THIS DRAWING IS THE PROPERTY OF CYCLONAIRE CORPORATION SUBMITTED TO THE RECIPIENT IN CONFIDENCE AND SHALL NOT BE COPIED IN ANY MANNER NOR DISCLOSED TO ANY OUTSIDE PARTY WITHOUT THE WRITTEN CONSENT OF THIS COMPANY AND SHALL BE RETURNED ON REQUEST. ALL RIGHTS RESERVED. THIS DRAWING IS FOR PROCESS FLOW CONCEPT ONLY AND NOT TO BE USED FOR DESIGN PURPOSES.

SALES FLOW DIAGRAM REFERENCE ONLY
TURBO-INDUCTOR SYSTEM

DRAWING NO.	DRAWN BY
XXXXX	XXXXX
SHEET	DATE
1 OF 1	XXXXX

cyclonaire
pneumatic conveying solutions
2922 N. DIVISION AVE. YORK, NE 68467, USA

ITEM	QTY	DESCRIPTION	MATERIAL	PART NUMBER	REV
1	1	TURBO 6/10 MATL 8/4 AIR | INDUCTOR BASE SETUP	CS	0-68840	
2	1	ADAPTER 3 5/8" OAL | 4" SCH 40 GP X 4" MNPT	CS	21-2-07818	A
3	1	ADAPTER,6" SCH 40 GP X 6" MNPT, 4 5/8" OAL	CS	21-2-08766	
4	1	TURBO OUTLET ADAPTER | 10" TO 8" CERAMIC LINED	CS	22-0-20814	
5	1	GROOVED PIPE END | 8" SCH 40 X 2"	CS	22-3-0233-10	F
6	12	BOLT 7/8" X 2 1/2" UNC HEX HEAD	PLTD	900-00283	
7	12	NUT 7/8" UNC HEX	PLTD	900-05028	
8	12	WASHER 7/8" SPG LOCK	PLTD	900-10043	
9	1	GASKET 10" ANSI | 1/16" THICK	COMPOSITE	905-03028	
10	1	COUPLER 4" FEMALE | QUICK CONNECT	ALUM	905-10013	
11	1	COUPLER | 6" FEMALE QUICK CONNECT	ALUM	905-10027	
12	1	COUPLER 4" GROOVED PIPE | BLACK EPDM SEAT	GALV.	905-10039	
13	1	COUPLER 6" GROOVED PIPE | BLACK EPDM SEAT	GALV.	905-10043	
14	1	COUPLER 8" GROOVED PIPE | BLACK EPDM SEAT	GALV.	905-10044	

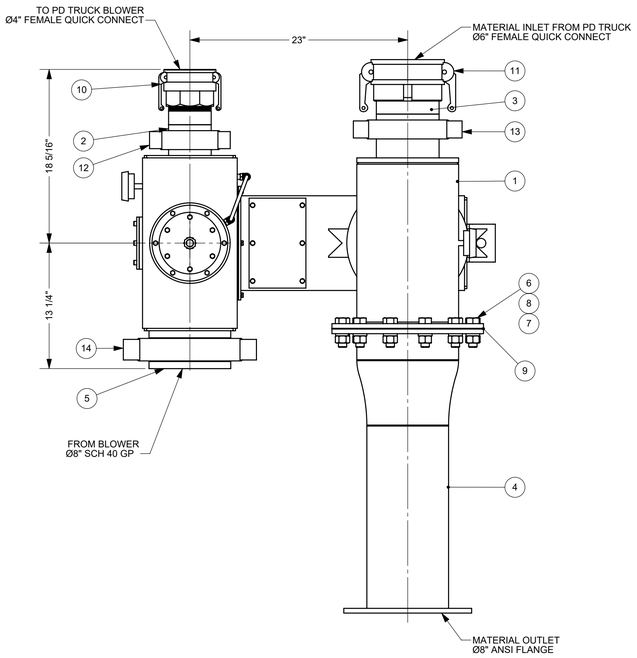

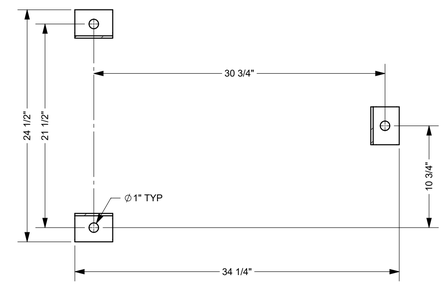

SECTION A-A

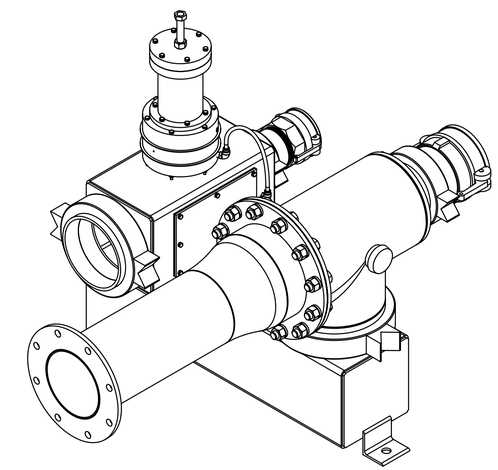

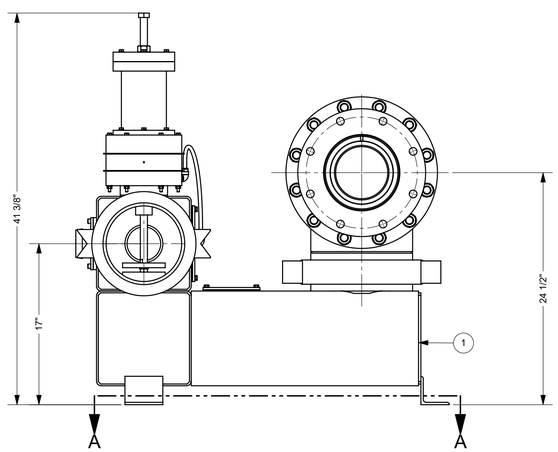

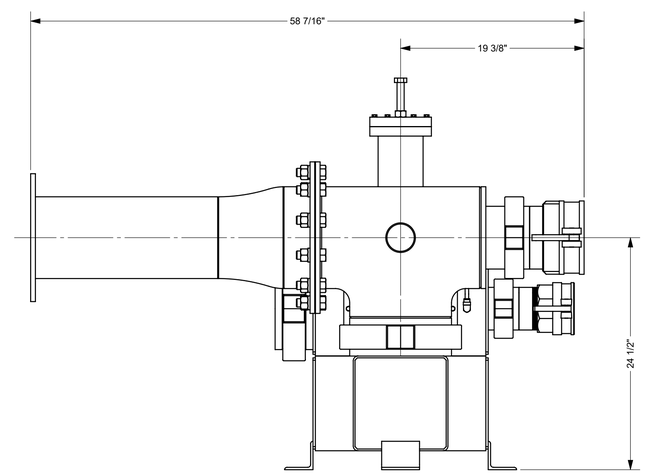

Proprietary to Cyclonaire
For Illustration Only

NOTES:
1. ANY PART NOT SPECIFICALLY CALLED OUT IN THE BILL OF MATERIALS IS "BY OTHERS"
2. CUSTOMER IS RESPONSIBLE FOR FOUNDATION DESIGN AND ANCHOR BOLTS
3. REFERENCE EQUIPMENT ID/AREA ID FOR PAINT SPECIFICATIONS

REVISIONS

REV.	DESCRIPTION	BY	DATE
A	INCREASED ACCESS HOLE SIZE	JP	4/25/2023

DRN. BY	TR	CKD. BY	BL	DATE	03/31/2023
SCALE	1:8	MAT'L	CS	WEIGHT	693 LBS
SIZE	D	FINISH			

cyclonaire pneumatic conveying solutions
2922 N. DIVISION AVE.
YORK, NEBR. 68467

TURBO, 6/8 MATERIAL
8/4 AIR CONNECTION

STATE: ~~RELEASED FOR FABRICATION~~

DWG # 0-68093 | SHEET 1 OF 1 | REV. A

THIS DRAWING IS THE PROPERTY OF CYCLONAIRE. IT IS BEING SUBMITTED TO THE RECIPIENT IN CONFIDENCE AND SHALL NOT BE COPIED IN ANY MANNER NOR DISCLOSED TO ANY OUTSIDE PARTY WITHOUT THE WRITTEN CONSENT OF THIS COMPANY AND SHALL BE RETURNED ON REQUEST.
ALL RIGHTS RESERVED.

THIRD ANGLE PROJECTION

TOLERANCE UNLESS OTHERWISE NOTED
X/X = ± 1/16
.XX = ± .01
.XXX = ± .005
ANGLES = ± 1.0°

ITEM	QTY	DESCRIPTION	MATERIAL	PART NUMBER	REV
1	1	ENCLOSURE 6" X 4" JB | W/ TEMP TRANSMITTER	CS	0-52102	A
2	1	BLOWER 1300 SCFM @ 15 PSIG | 63P 125 HP 3/60/230-460V	CS	24-0-05688	E
3	2	BOLT 1/4" X 1" UNC HEX HEAD	PLTD	900-00004	
4	2	NUT 1/4" UNC HEX	PLTD	900-05000	
5	2	WASHER 1/4" SPG LOCK	PLTD	900-10011	

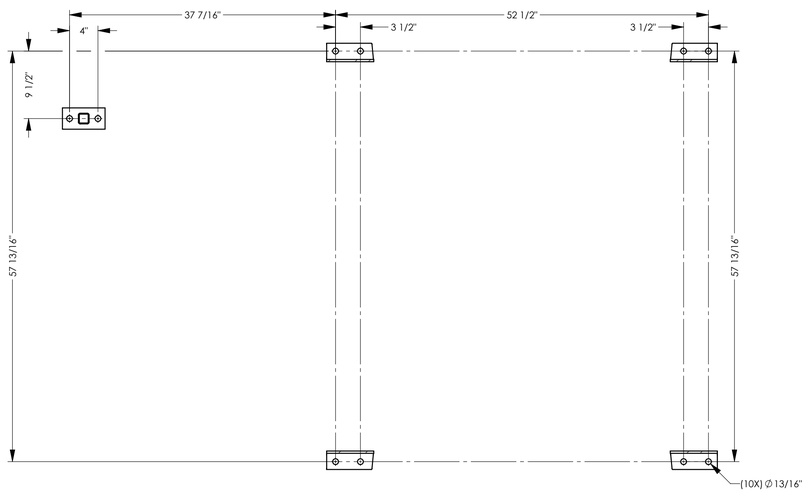

SECTION A-A

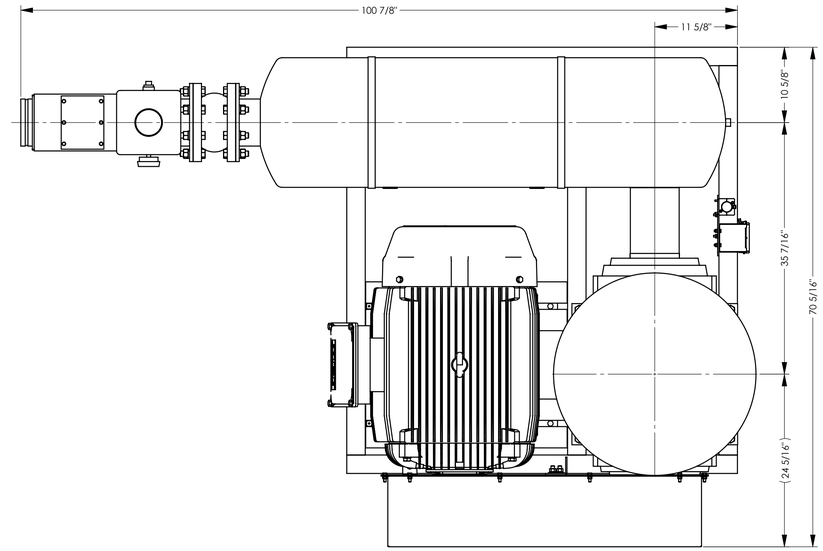

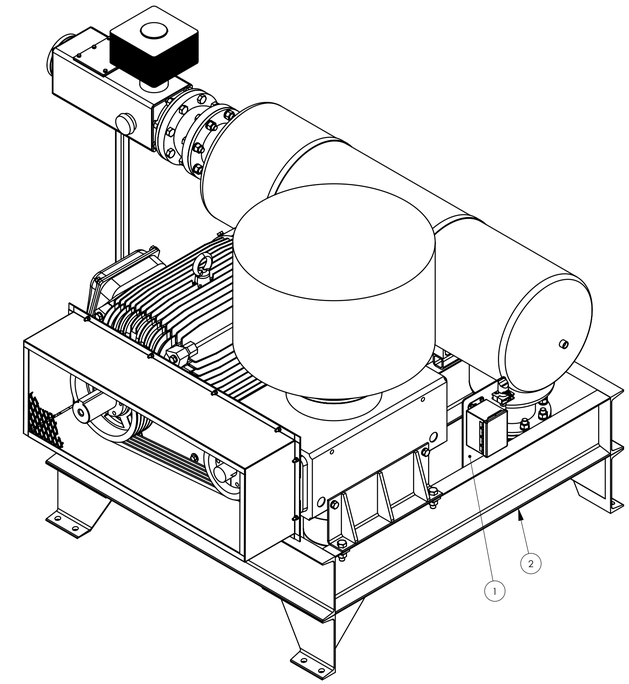

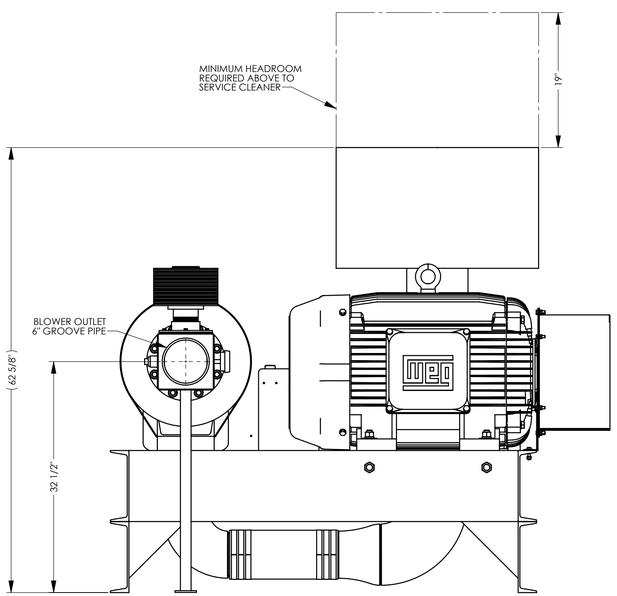

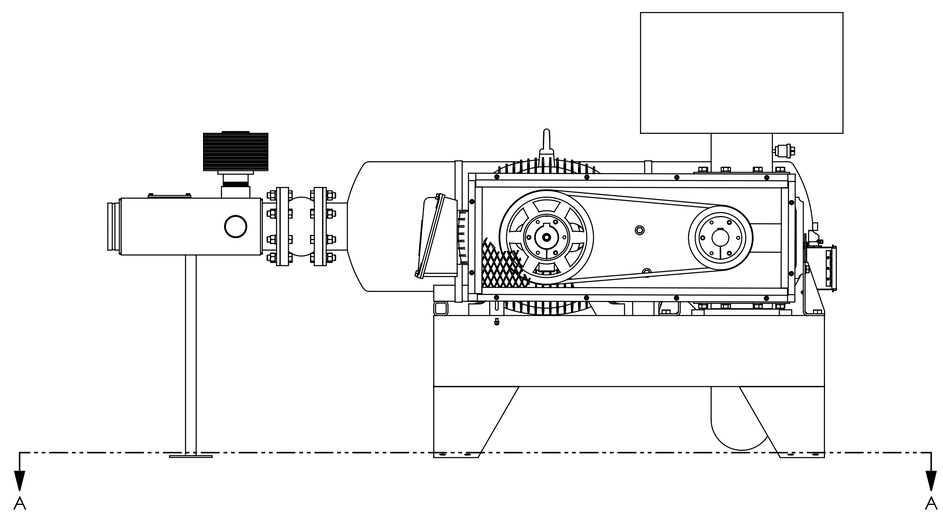

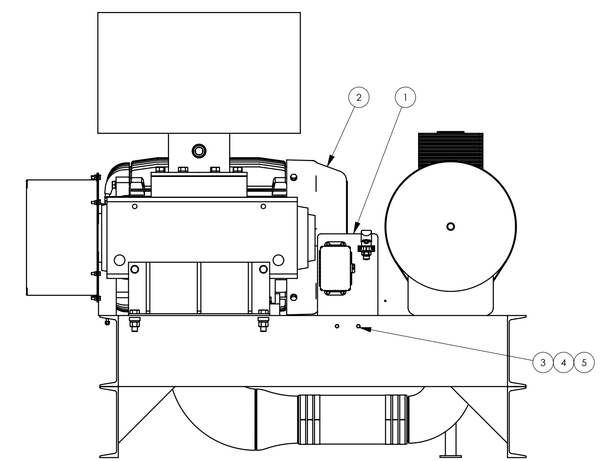

Proprietary to Cyclonaire
For Illustration Only

NOTES:
1. ANY PART NOT SPECIFICALLY CALLED OUT IN THE BILL OF MATERIALS IS "BY OTHERS"
2. CUSTOMER IS RESPONSIBLE FOR FOUNDATION DESIGN AND ANCHOR BOLTS
3. REFERENCE EQUIPMENT ID/AREA ID FOR PAINT SPECIFICATIONS

DRN. BY	CK	CHK. BY	BL	DATE	09/01/2022
SCALE	3:32	MAT'L	CS	WEIGHT	5002 LBS
SIZE	D	FINISH			

THIS DRAWING IS THE PROPERTY OF CYCLONAIRE CORPORATION, SUBMITTED TO THE RECIPIENT IN CONFIDENCE AND SHALL NOT BE COPIED IN ANY MANNER NOR DISCLOSED TO ANY OUTSIDE PARTY WITHOUT THE WRITTEN CONSENT OF THIS COMPANY AND SHALL BE RETURNED ON REQUEST. ALL RIGHTS RESERVED.

THIRD ANGLE PROJECTION

TOLERANCE UNLESS OTHERWISE NOTED
X/X = ± 1/16
.XX = ± .01
.XXX = ± .005
ANGLES = ± 1.0°

cyclonaire
pneumatic conveying solutions
2922 N. DIVISION AVE.
YORK, NEBR. 68467

BLOWER 1300SCFM @ 15 PSIG 63P
125HP 3/60/230-460V TEMP TRANS

STATE: CERTIFIED DESIGN

DWG # 0-63420 | SHEET 1 OF 1 | REV.