ENDORSED:

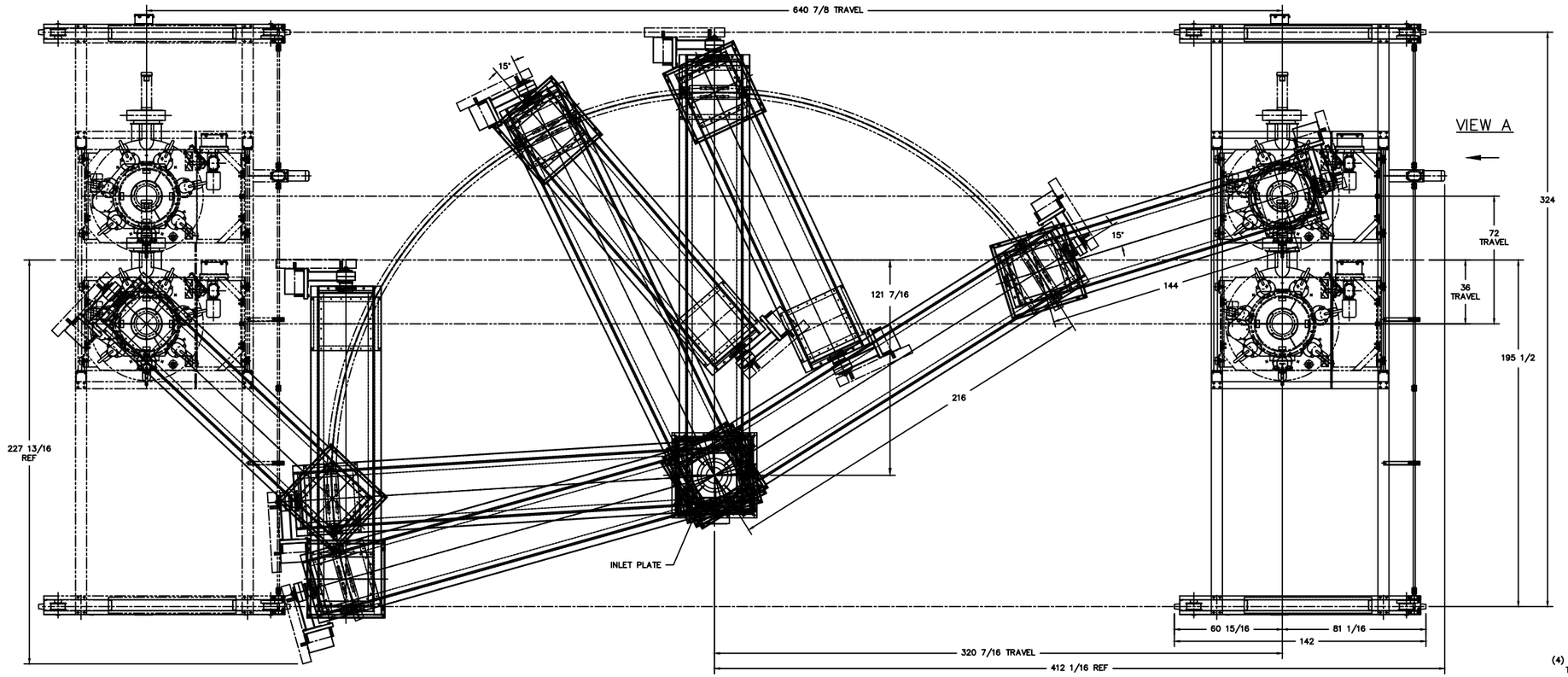

CUSTOMER TO PROVIDE A 30# A.S.C.E. RAIL AND ALL SUPPORT MEMBERS AT LOCATIONS SHOWN IN DRAWING.

ALSO CUSTOMER TO PROVIDE END STOPS. (SIMILAR TO SHOWN STOPS TO TRIP END OF TRAVEL LIMIT SWITCHES)

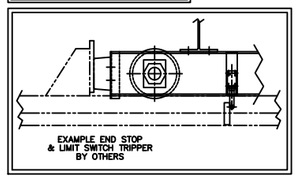

NOTE: DIMENSIONAL DATA OTHER THAN DCL EQUIPMENT IS SHOWN FOR REFERENCE ONLY. CUSTOMER ASSUMES ALL RESPONSIBILITY FOR CLEARANCES BETWEEN DCL EQUIPMENT AND SURROUNDING STRUCTURES.

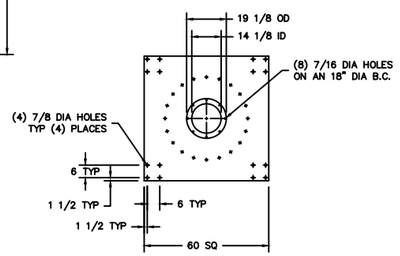

INLET FLANGE & SUPPORT PLATE TOP VIEW

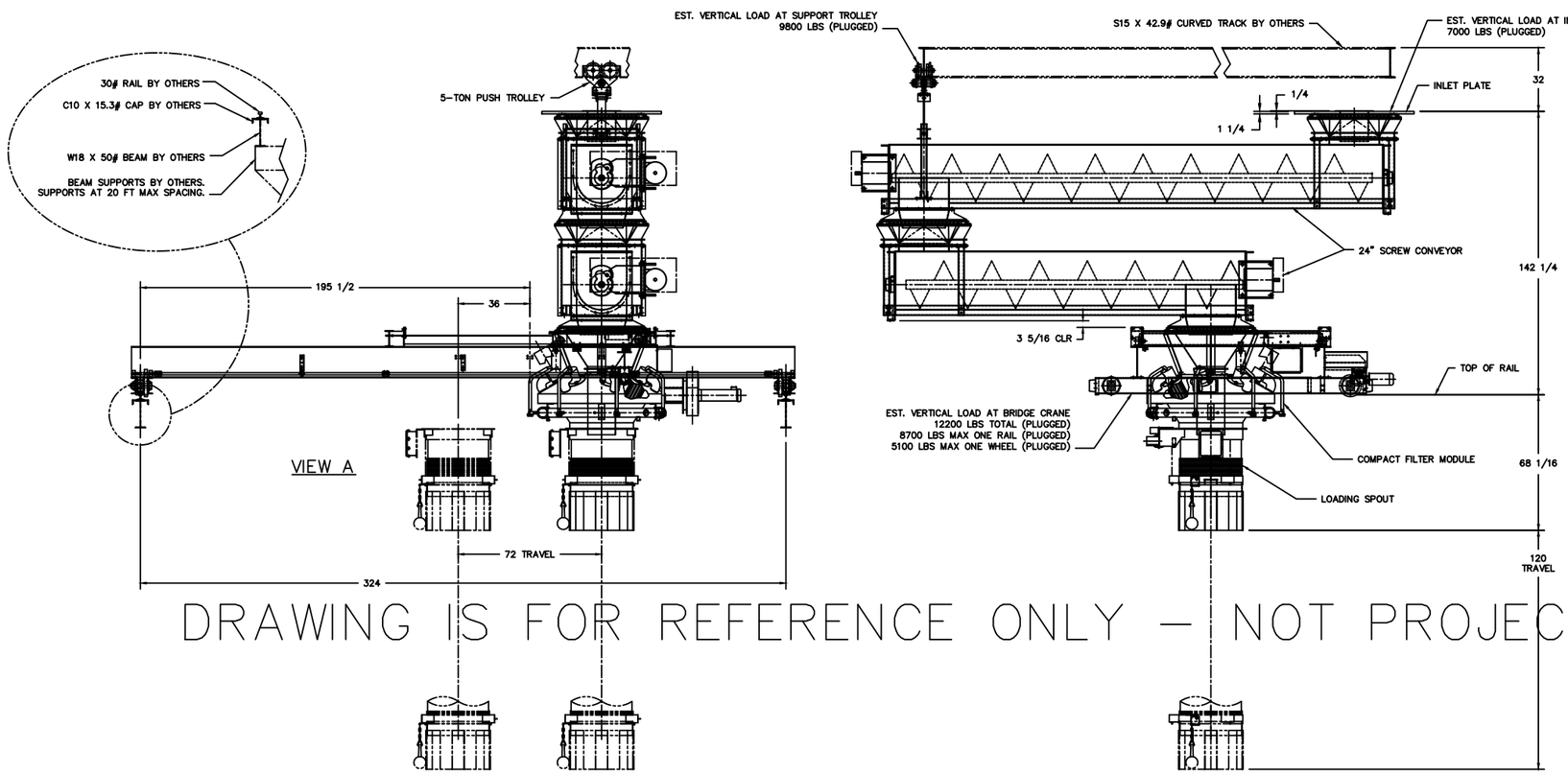

DRAWING IS FOR REFERENCE ONLY – NOT PROJECT SPECIFIC

DETAIL	QNTY.	DESCRIPTION	MATERIAL	WGT.

DCL SPECIALISTS IN ADVANCED DESIGN LOADING SYSTEMS

P.O. BOX 125
CHARLEVOIX, MICHIGAN 49720
(231) 547-5600

TOLERANCES UNLESS OTHERWISE SPECIFIED
FRACTIONAL± 1/16" DECIMAL±.06 ANGULAR 1/2

DRAWN BY:
CHECKED BY:
SCALE: 1/32"=1"
DATE:

TITLE: GENERAL ARRANGEMENT

DRAWING No: