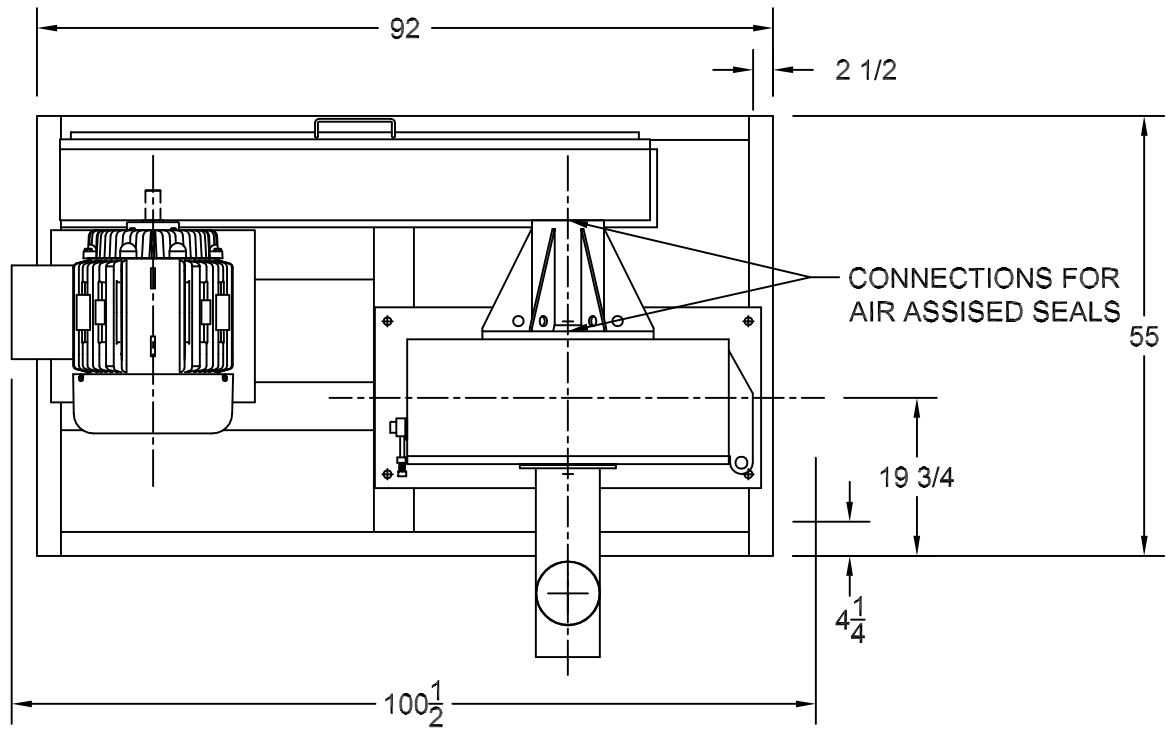

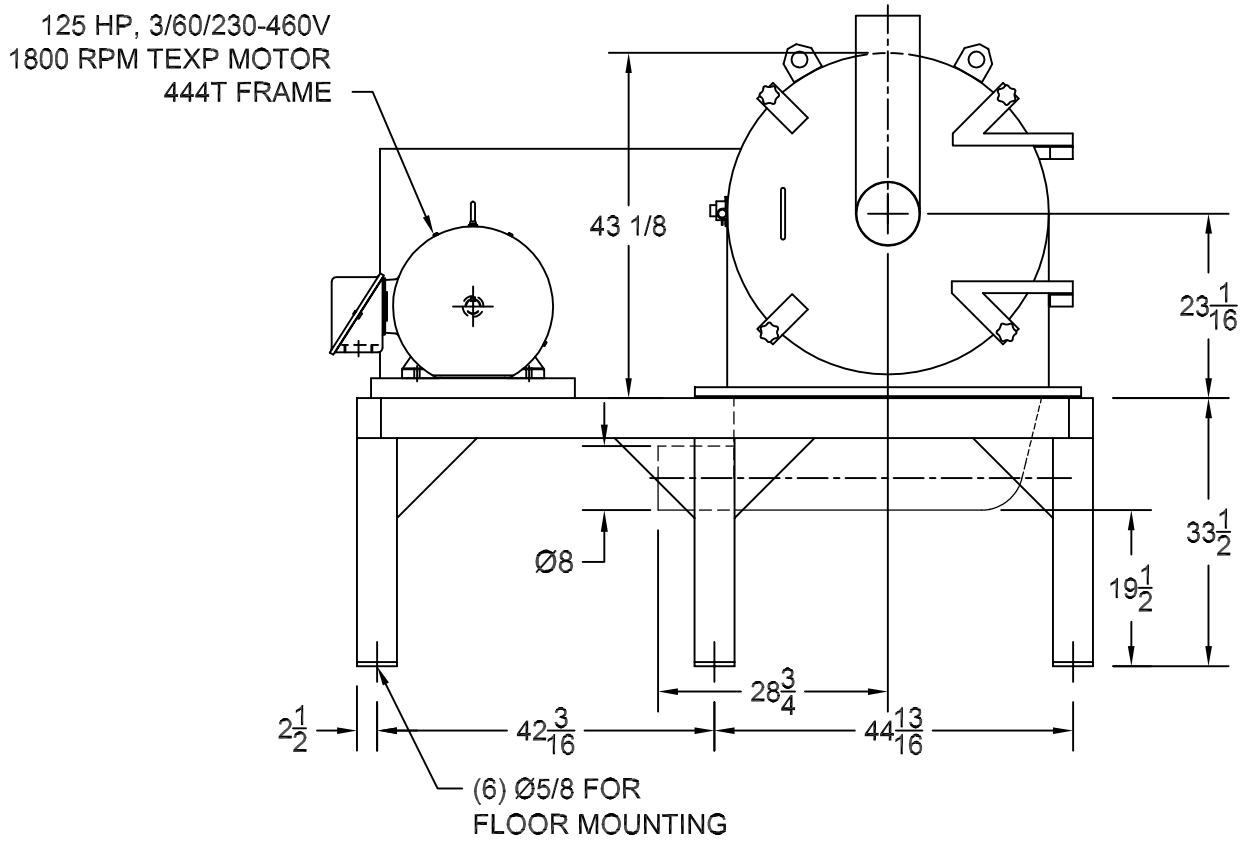

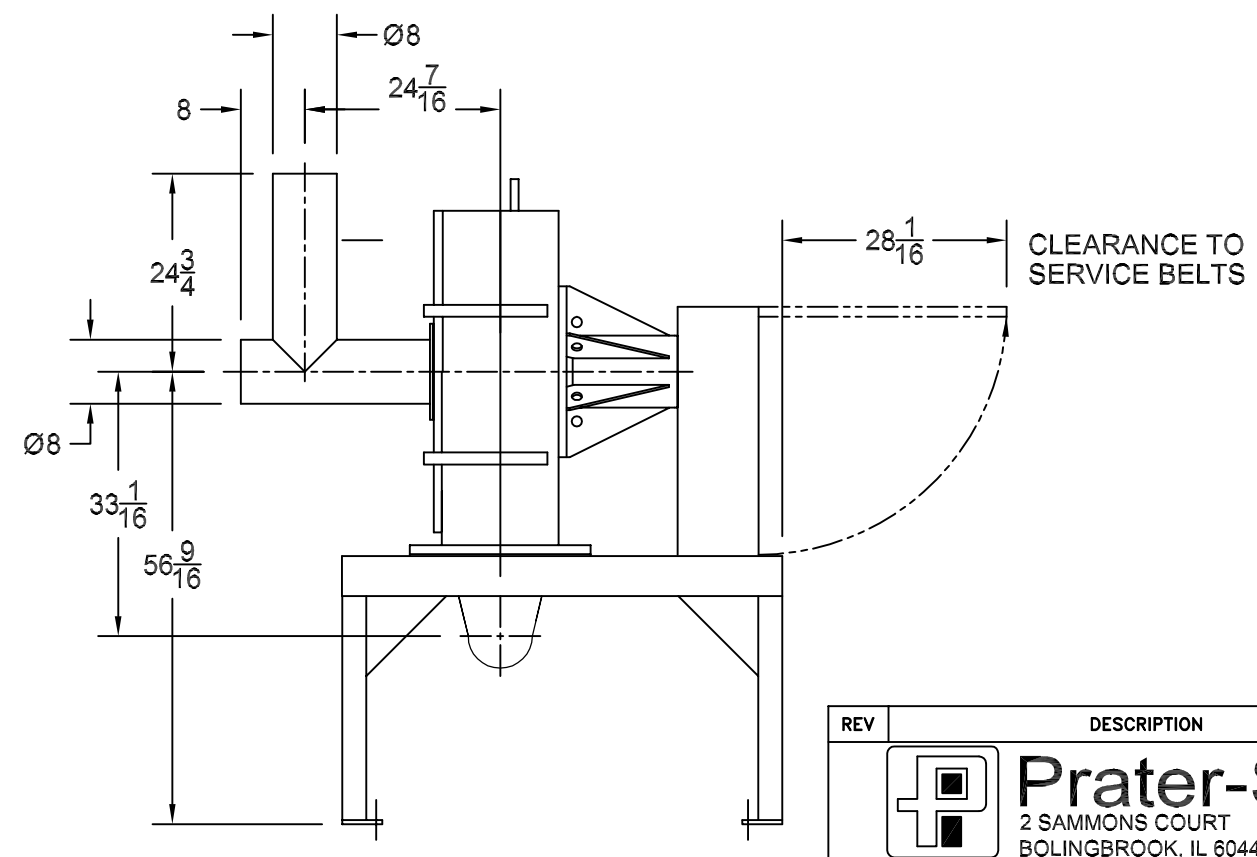

REV	DESCRIPTION	DATE	BY

Prater-Sterling
2 SAMMONS COURT
BOLINGBROOK, IL 60440

M-76 FINE GRINDER
W/8" LOW FLOW BASE

CONFIDENTIAL

THIS DRAWING IS THE PROPERTY OF PRATER-STERLING, WHO CLAIMS PROPRIETARY RIGHTS IN THE MATERIAL DISCLOSED. IT IS ISSUED IN CONFIDENCE FOR ENGINEERING INFORMATION ONLY AND MAY NOT BE COPIED OR USED FOR MANUFACTURE OF ANYTHING SHOWN WITHOUT SPECIFIC WRITTEN PERMISSION FROM PRATER-STERLING.

DATE: 12/5/08	BY: MJW	NUMBER: SK-2113-16
SCALE: 1:24	APP:	