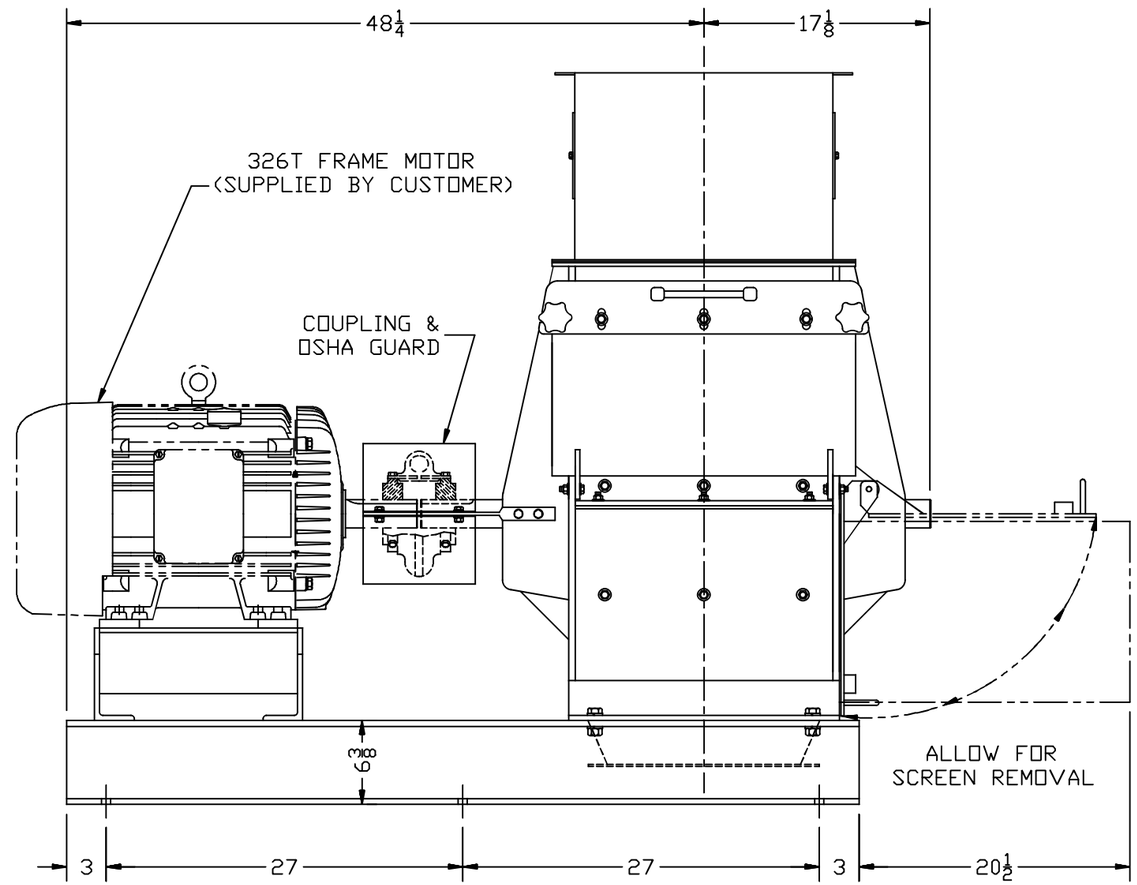

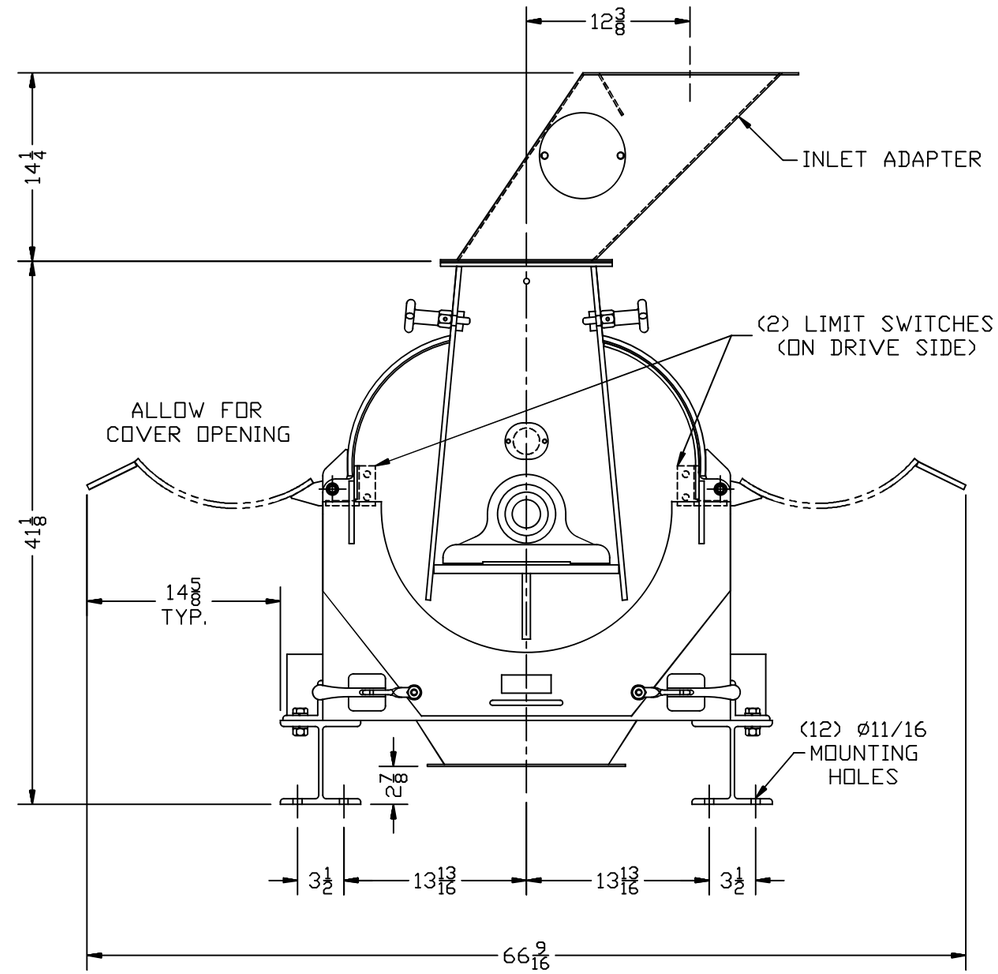

INLET ADAPTER FLANGE

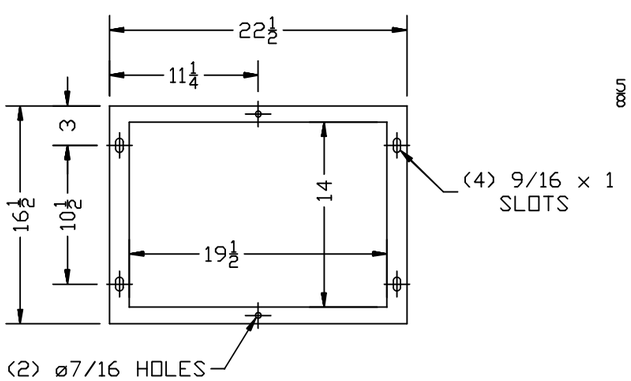

DISCHARGE FLANGE

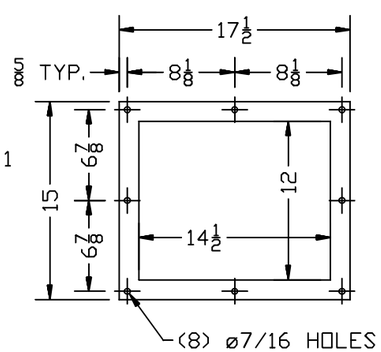

INLET FLANGE

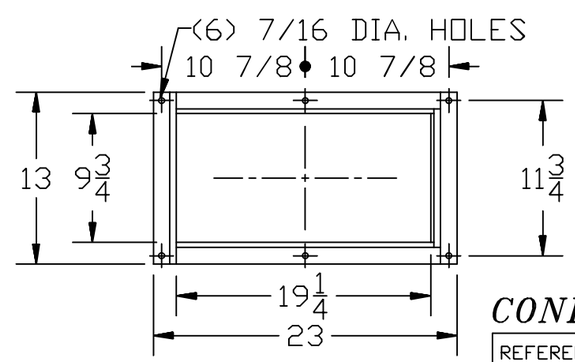

CONFIDENTIAL

REFERENCE DRAWING ONLY
NOT TO BE USED FOR
CONSTRUCTION UNLESS
CERTIFIED.

REV	DESCRIPTION	DATE	BY

Prater
THE ASSOCIATED PRATER COMPANI
1515 S. 55TH COU
CICERO, IL. 60804

G7HFS MILL WITH MOTOR BASE
AND FEED INLET

DATE: 11/12/99	BY: CJE	NUMBER:
SCALE: 1/12=1	APP:	SK-2029-08