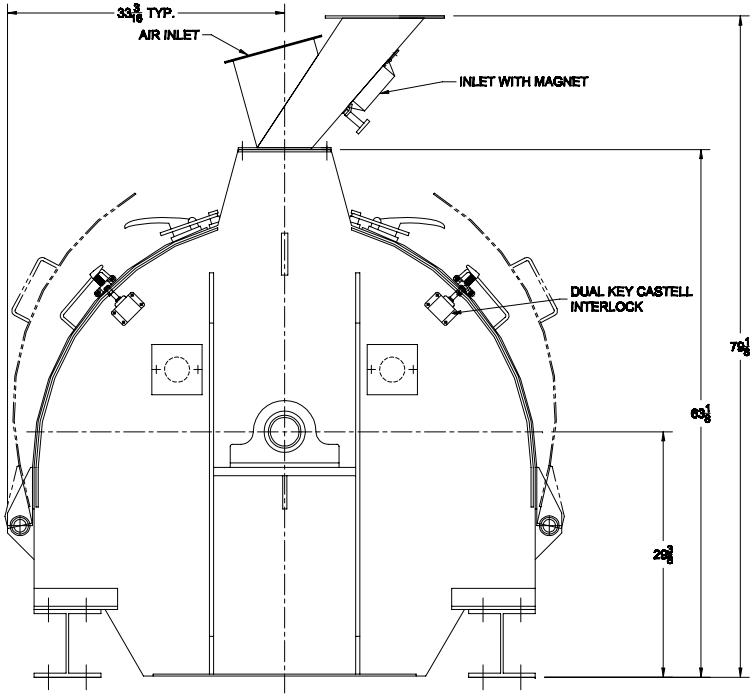

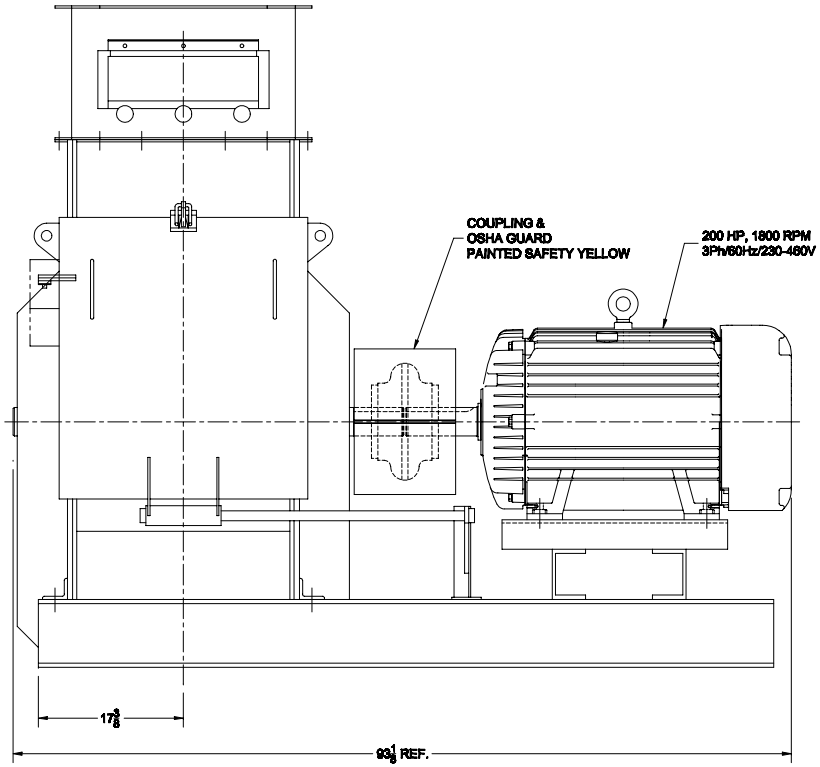

INLET FLANGE DETAIL

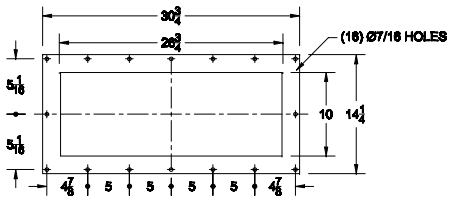

REV	DESCRIPTION	DATE	BY

Prater-Sterling
2 SAMMONS COURT
BOLINGBROOK, IL 60440

GF-25-FS MILL ON BASE WITH A.P.U.
HOPPER & FEEDTABLE W/MAGNET

CONFIDENTIAL

REFERENCE DRAWING ONLY NOT TO BE USED FOR CONSTRUCTION UNLESS CERTIFIED.

DATE: 3/1/06	BY: MAB	NUMBER:
SCALE: 1" = 12"	APP:	SK-2035-13