Prater	RS-13 ASSEMBLY	DATE: 6/19/12	BY: VM	NUMBER: SK-2064-02
2 SAMMONS CT BOLINGBROOK, IL 60440 THE ASSOCIATED PRATER COMPANIES		SCALE: 1/8 = 1	APP:	

REV	DESCRIPTION	DATE	BY

REFERENCE DRAWING ONLY NOT TO BE USED FOR CONSTRUCTION UNLESS CERTIFIED
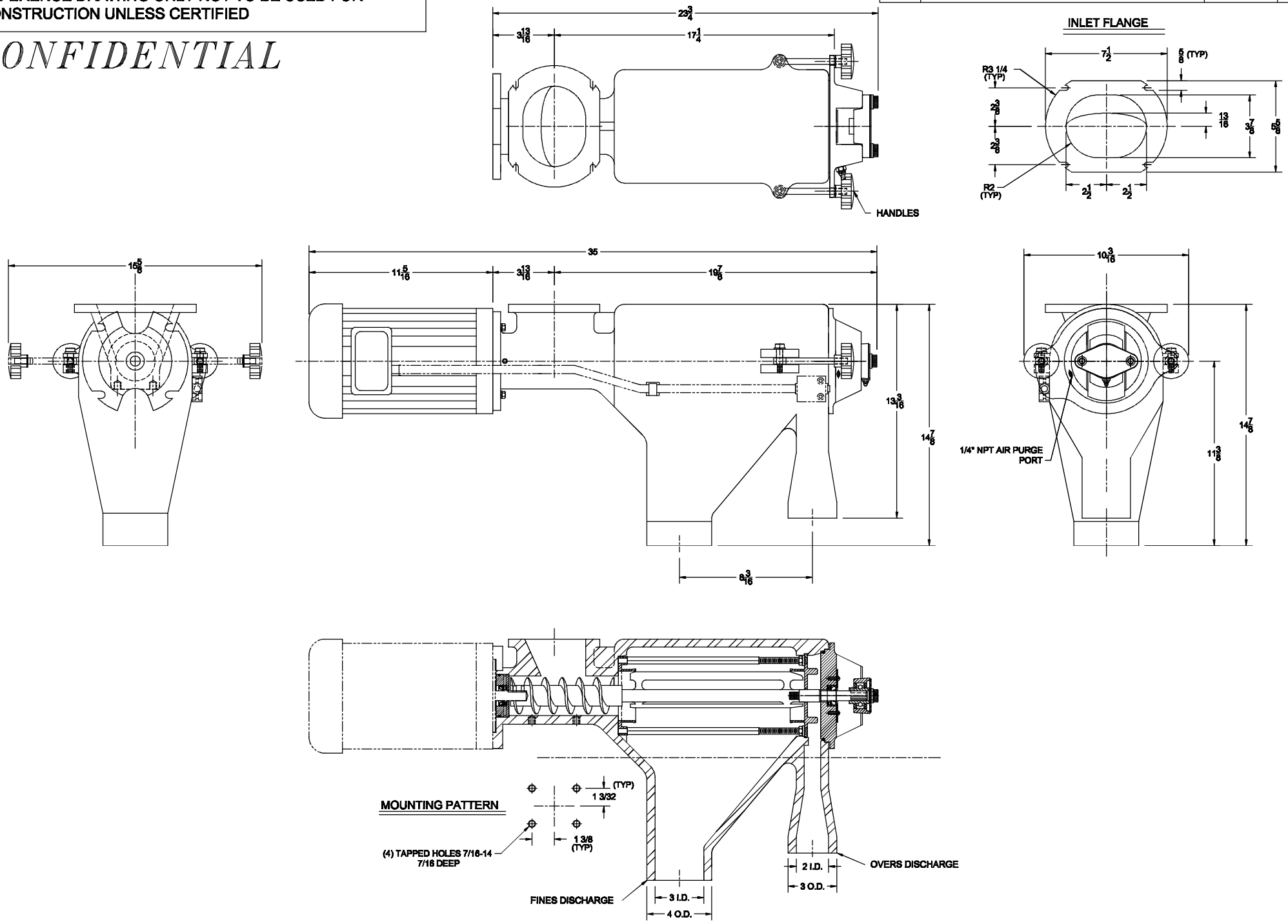
CONFIDENTIAL