| P/N | A (in.) | B (in.) | C (in.) | D (in.) | F (in.) | G (in.) |
|---|---|---|---|---|---|---|
| * 11707 | 7.72 | 2.14 | 2.43 | 0.81 | 1.93 | 0.74 |

* Note: 11707 includes detector and mounting adaptor.

| REV. | DESCRIPTION | ECO #. |
|---|---|---|
| 1 | Initial Release | 2221 |
| 2 | Increased Size of Air Port | 2265 |

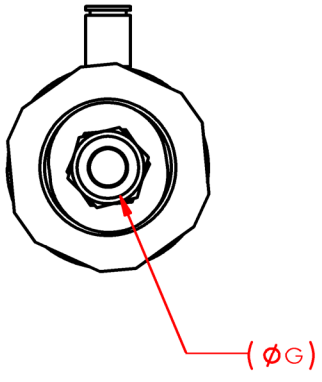


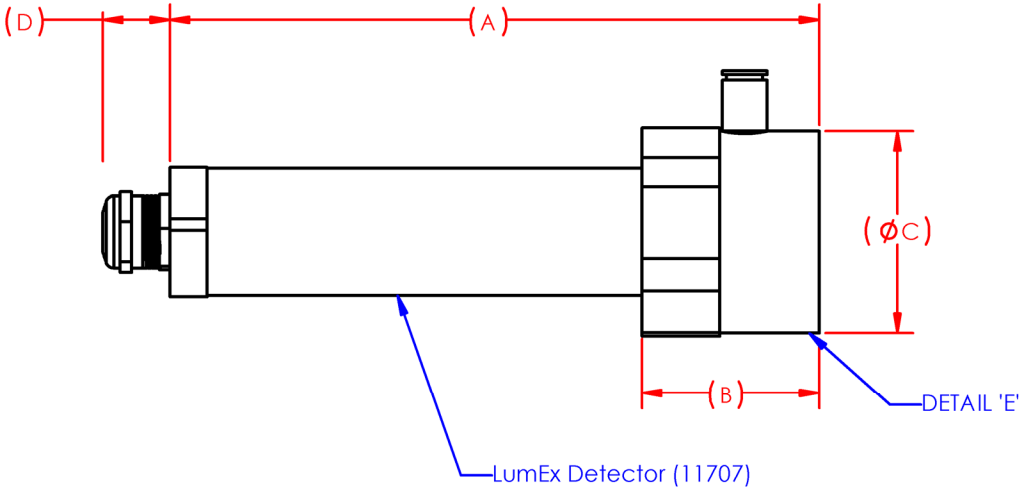


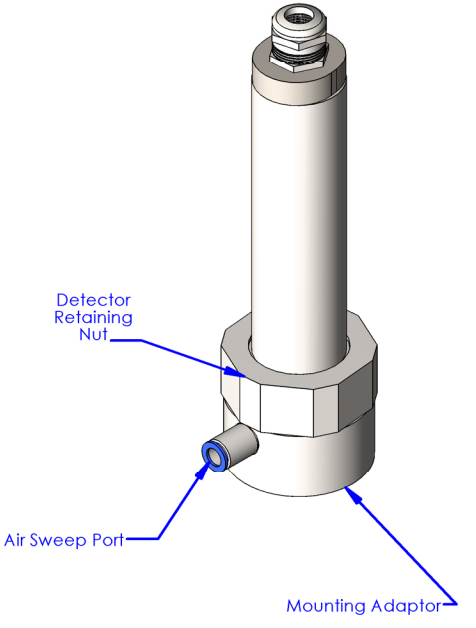


3 **DETAIL 'E' -11712, LumEx Mounting Adaptor**

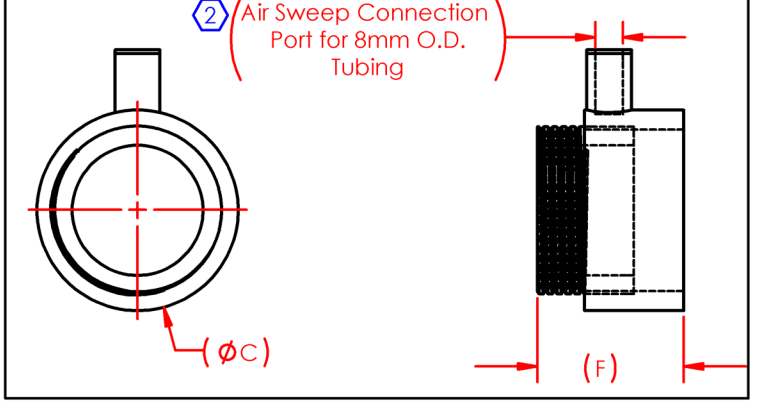


3 Mounting Adaptor available separate as Part # 11712.

| UNLESS OTHERWISE SPECIFIED: | | NAME | DATE |
|---|---|---|---|
| DIMENSIONS ARE IN INCHES<br>TOLERANCES:<br>FRACTIONAL ±1/16<br>ANGULAR: MACH ±½ BEND ±<br>TWO PLACE DECIMAL ±.03<br>THREE PLACE DECIMAL ±.01 | DRAWN | N.OUZTS | 12/4/2013 |
| | CHECKED | RVC | 06/07/13 |
| | ENG APPR. | J.KRBEC | 06/06/13 |
| INTERPRET GEOMETRIC TOLERANCING PER: ASME Y-14.5M | | | |
| MATERIAL | | | |
| FINISH | | | |
| DO NOT SCALE DRAWING | | | |

PROPRIETARY AND CONFIDENTIAL
THE INFORMATION CONTAINED IN THIS DRAWING IS THE SOLE PROPERTY OF CV Technology, Inc. ANY REPRODUCTION IN PART OR AS A WHOLE WITHOUT THE WRITTEN PERMISSION OF CV Technology, Inc. IS PROHIBITED.

CV Technology, Inc. Superior Fire & Explosion Protection
15852 Mercantile Court • Jupiter, Florida 33478
Phone 561.694.9588 • www.cvtechnology.com

TITLE: LumEx- CUTSHEET

| SIZE | DWG. NO. | REV |
|---|---|---|
| A | 8017 | 2 |

SCALE: | WEIGHT: | SHEET 1 OF 1