FLANGE	SQUARE	CIRCULAR
TOP	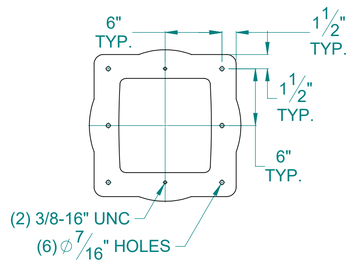	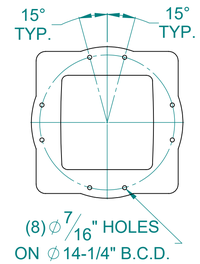
BOTTOM	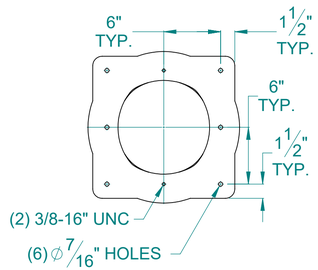	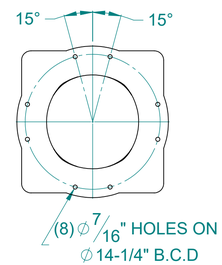

OTHER BOLT PATTERNS ARE AVAILABLE UPON REQUEST.

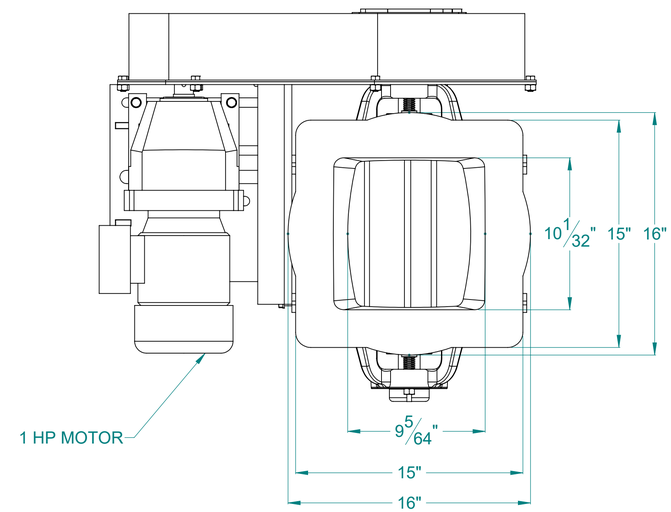

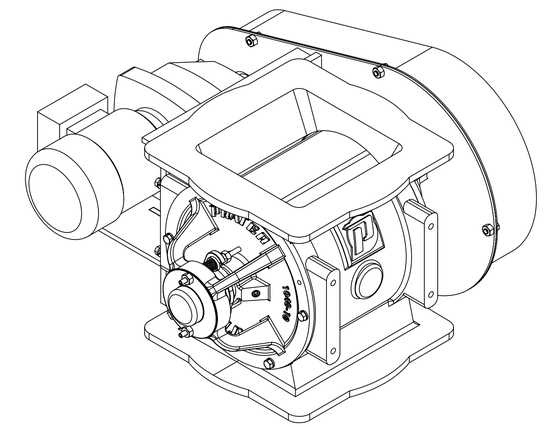

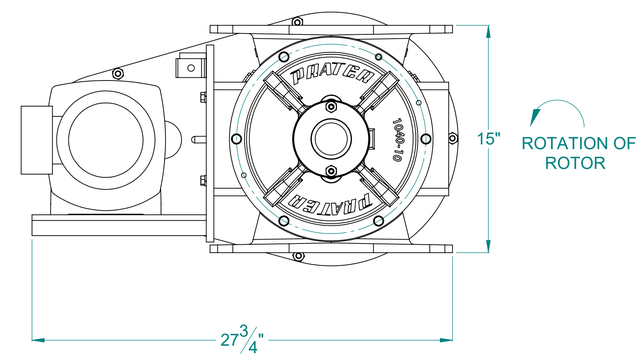

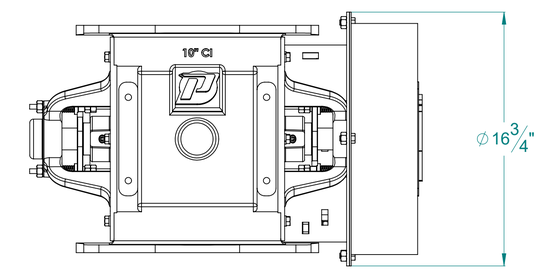

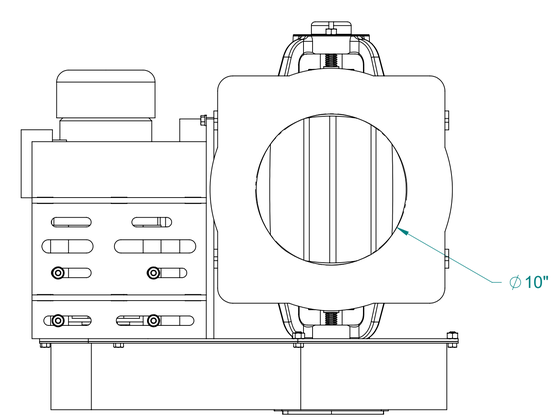

NOTES:

GENERAL LAYOUT DRAWING ONLY.
NOT FOR CONSTRUCTION PURPOSE

PART NUMBER
PAV-10 NEW

PROPRIETARY AND CONFIDENTIAL

THIS DRAWING IS THE PROPERTY OF PRATER INDUSTRIES, WHO CLAIMS PROPRIETARY RIGHTS IN THE MATERIAL DISCLOSED. IT IS ISSUED IN CONFIDENCE FOR ENGINEERING INFORMATION ONLY AND MAY NOT BE COPIED OR USED FOR MANUFACTURE OF ANYTHING SHOWN WITHOUT WRITTEN PERMISSION FROM PRATER INDUSTRIES.

STOCK SIZE	WEIGHT 291.713	MATERIAL M.S.			STOCK NO
PRATER 7 SAMMONS COURT BOLINGBROOK, IL TELEPHONE (630)759-9500 FAX (630)759-9509					
DESCRIPTION: PAV-10 SK DRAWINGS					
USED IN					
DRAWN BY RP	DATE 8/8/2018	SCALE 1:5	SHEET 1 OF 1	SIZE D	
CHECKED BY	DATE	PART NUMBER PAV-10 NEW			
APPROVED BY	DATE				

REMOVE ALL BURRS AND BREAK ALL SHARP CORNERS

MACHINING TOLERANCES
DECIMAL (UOS) XX= ± .010 XXX= ± .005
FRACTIONAL (UOS) (ALL)= ± 1/64
ANGULAR (UOS) (ALL)= ± .50°

THIRD ANGLE PROJECTION

M:/Engineering/Solidworks/SolidWorks Assemblies/AIRLOCKS/PAV-10/