FLANGE	SQUARE	CIRCLE
TOP	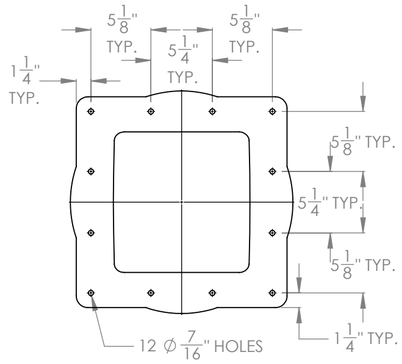	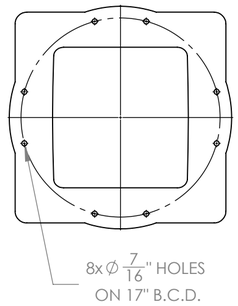
BOTTOM	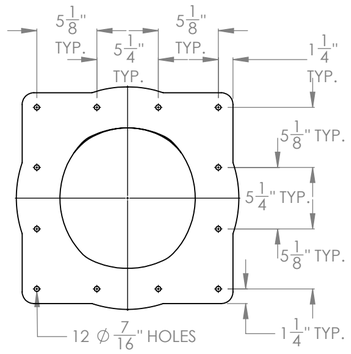	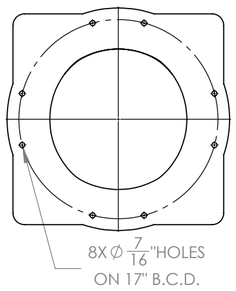

OTHER BOLT PATTERNS ARE AVAILABE UPON REQUEST.

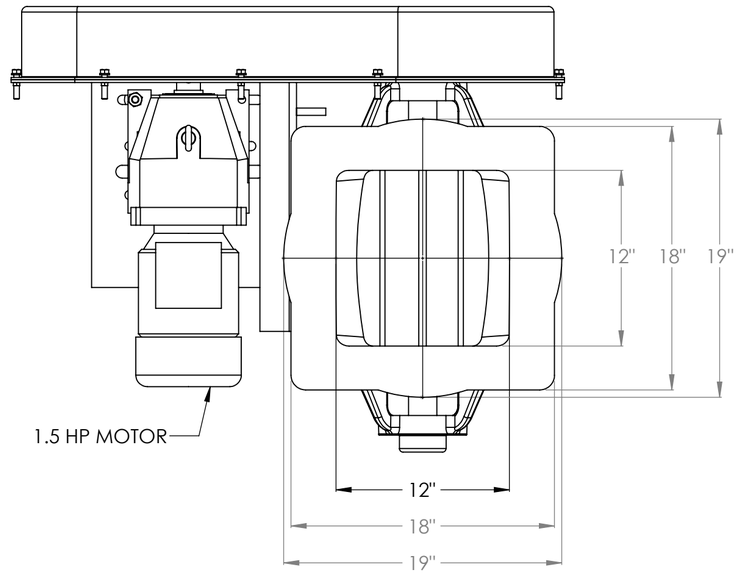

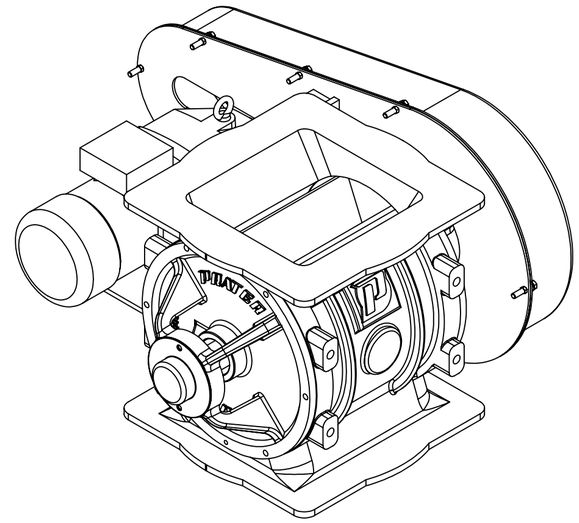

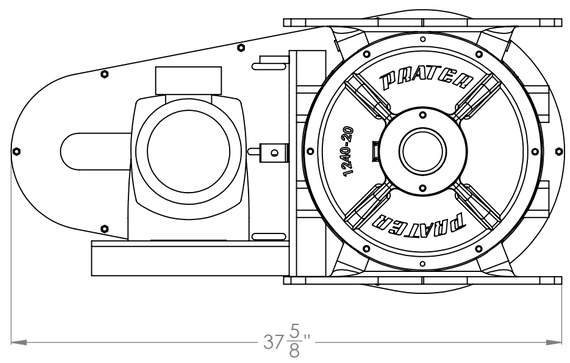

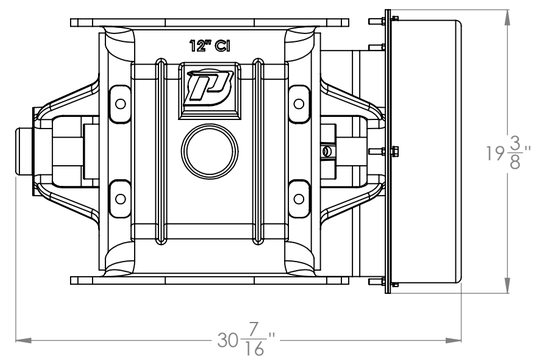

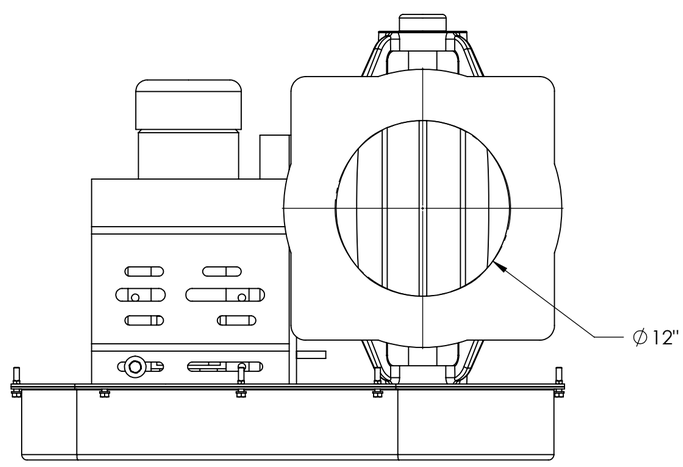

NOTES:

GENERAL LAYOUT DRAWINGS ONLY.
NOT FOR CONSTRUCTION PURPOSE.

PROPRIETARY AND CONFIDENTIAL
THIS DRAWING IS THE PROPERTY OF PRATER INDUSTRIES, WHO CLAIMS PROPRIETARY RIGHTS IN THE MATERIAL DISCLOSED. IT IS ISSUED IN CONFIDENCE FOR ENGINEERING INFORMATION ONLY AND MAY NOT BE COPIED OR USED FOR MANUFACTURE OF ANYTHING SHOWN WITHOUT WRITTEN PERMISSION FROM PRATER INDUSTRIES.

REMOVE ALL BURRS AND BREAK ALL SHARP CORNERS

THIRD ANGLE PROJECTION

MACHINING TOLERANCES
DECIMAL (UOS)
.XX = ± .010
.XXX = ± .005
FRACTIONAL (UOS)
(ALL) = ± 1/64
ANGULAR (UOS)
(ALL) = ± 30'

STOCK SIZE	WEIGHT	MATERIAL	STOCK NO
N/A	492.08	N/A	N/A

PRATER
2 SAMMONS COURT BOLINGBROOK, IL
TELEPHONE: (630)-759-9595 FAX: (630)-759-6099

DESCRIPTION
PAV-12 SK DRAWINGS

USED IN N/A

DRAWN BY	DATE	SCALE	SIZE	SHEET
RP	10/18/2018	1:8	C	1 OF 1

CHECKED BY	DATE	PART NUMBER
APPROVED BY	DATE	**PAV-12**

M:\Engineering\Solidworks\SolidWorks Assemblies\AIRLOCKS\PAV-12\