REFERENCE DRAWING ONLY - NOT TO BE USED FOR CONSTRUCTION UNLESS CERTIFIED

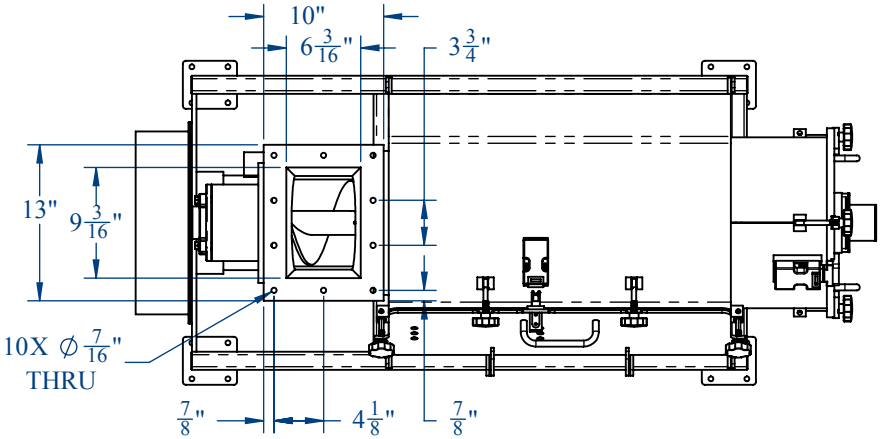

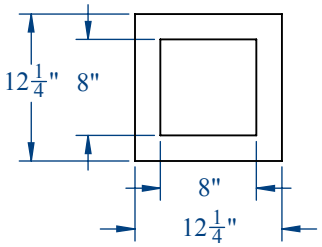

FINES DISCHARGE FLANGE

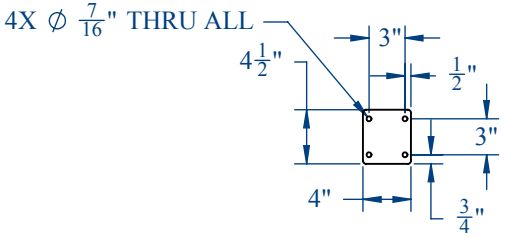

MOUNTING PAD DETAIL

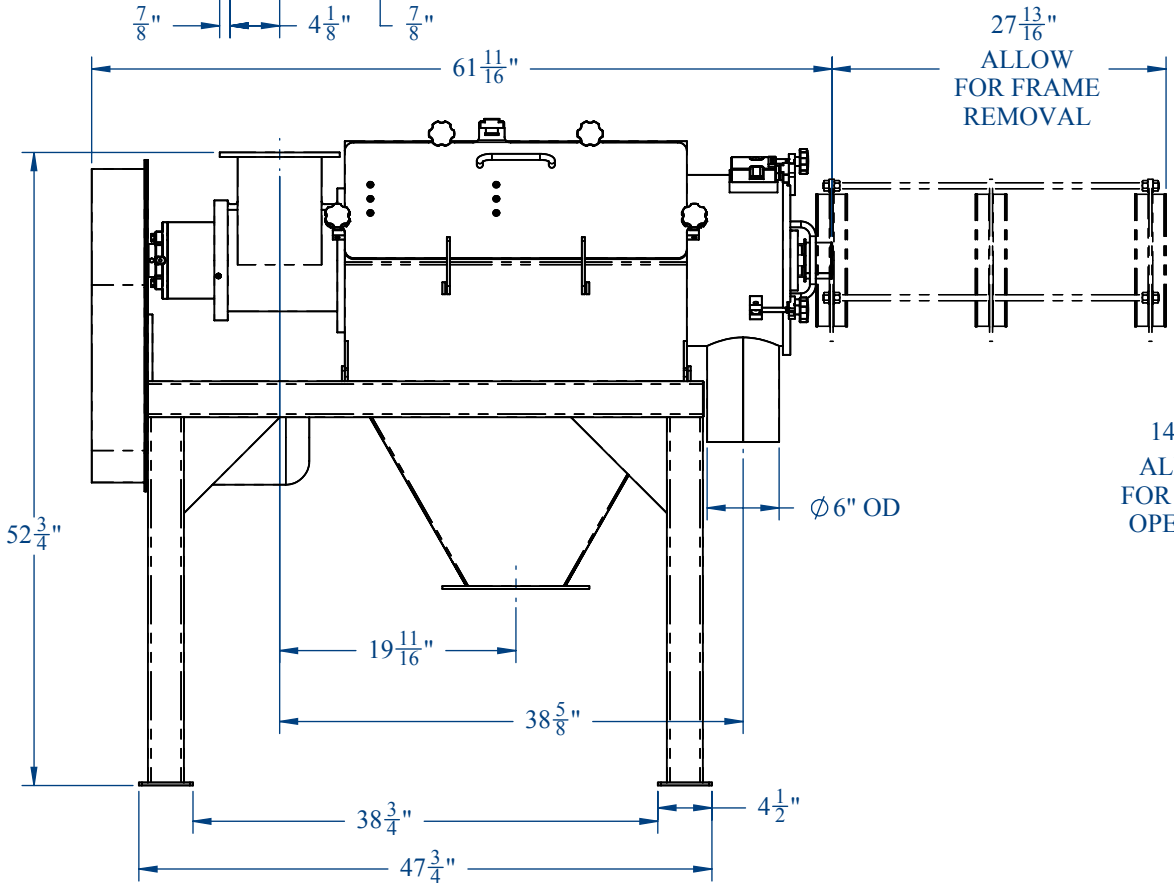

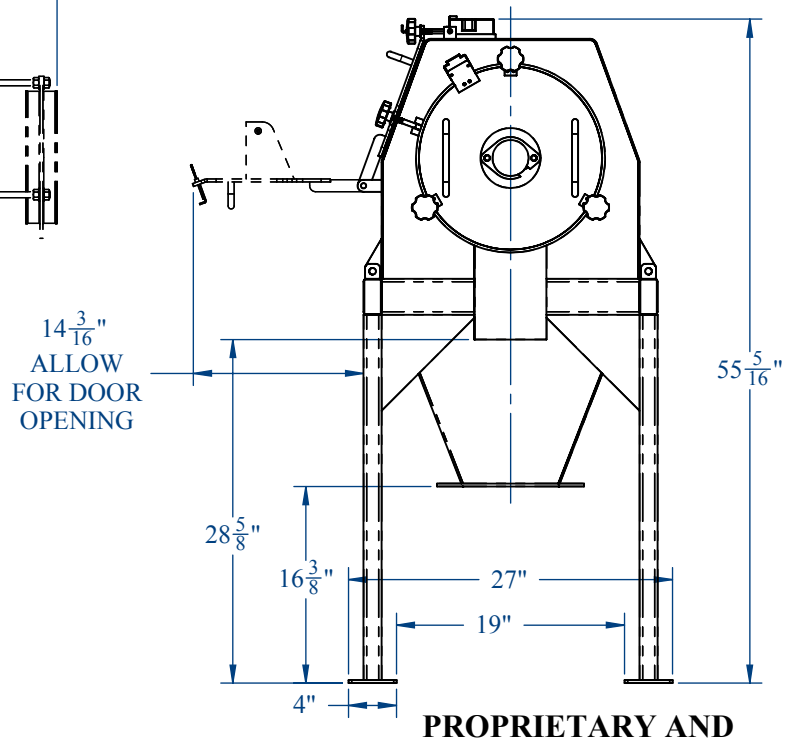

PROPRIETARY AND CONFIDENTIAL

THIS DRAWING IS THE PROPERTY OF PRATER INDUSTRIES, WHO CLAIMS PROPRIETARY RIGHTS IN THE MATERIAL DISCLOSED. IT IS ISSUED IN CONFIDENCE FOR ENGINEERING INFORMATION ONLY AND MAY NOT BE COPIED OR USED FOR MANUFACTURE OF ANYTHING SHOWN WITHOUT WRITTEN PERMISSION FROM PRATER INDUSTRIES.

REV	ECR#	DESCRIPTION	DATE	BY

REVISIONS HISTORY

DATE:	BY:	
9/3/09	MJW	
SCALE: 1:16	SIZE: A	APP:

RS-700 STANDARD

Prater-Sterling
2 SAMMONS COURT
BOLINGBROOK, IL 60440
PHONE: (630)-759-9595
FAX: (630)-759-6099