SK-2066-58

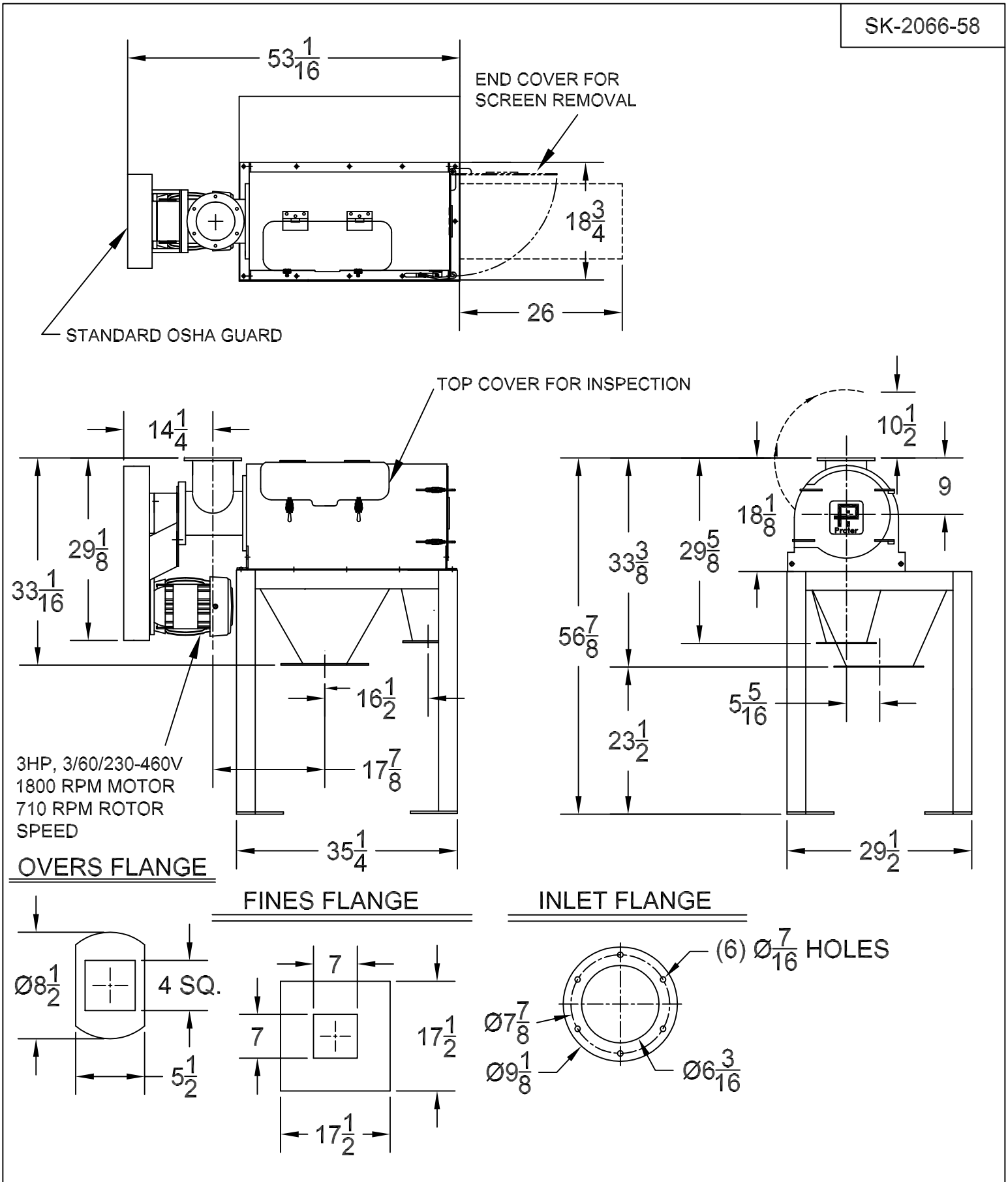

CONFIDENTIAL

REFERENCE DRAWING ONLY - NOT TO BE USED FOR CONSTRUCTION UNLESS CERTIFIED	REV	DESCRIPTION	DATE	BY

DATE: 6/1/92	BY: HAM	STANDARD 91 ROTA-SIEVE INCLUDES STANDARD STAND AND HOPPERS	Prater-Sterling 2 SAMMONS COURT BOLINGBROOK, IL 60440
SCALE: 1/20	APP:		