Prater-Sterling 2 SAMMONS COURT BOLINGBROOK, IL 60440	STANDARD 151 ROTA-SIEVE	DATE: 12/11/98	BY: CJE	NUMBER: SK-2067-60
		SCALE: 1/27=1	APP:	

REFERENCE DRAWING ONLY NOT TO BE USED FOR CONSTRUCTION UNLESS CERTIFIED

CONFIDENTIAL

REV	DESCRIPTION	DATE	BY

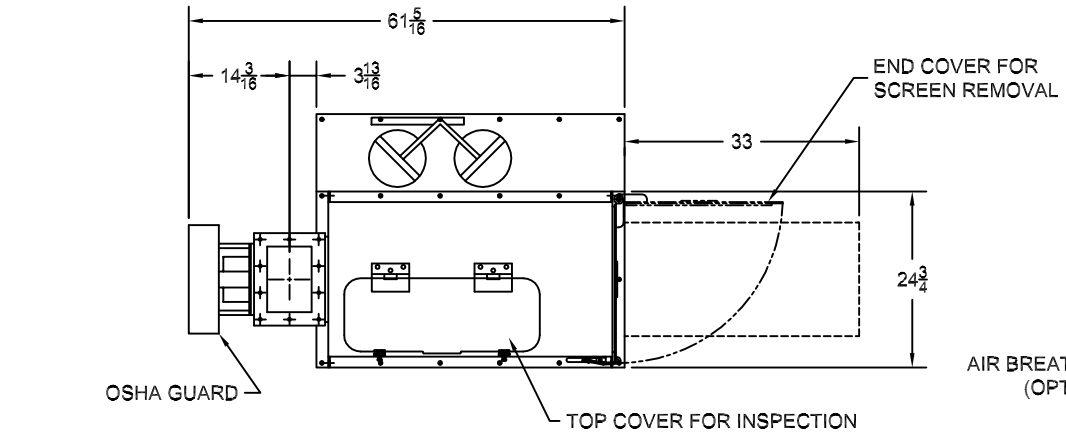

INLET FLANGE

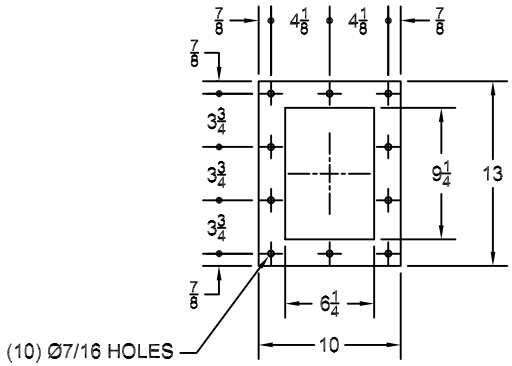

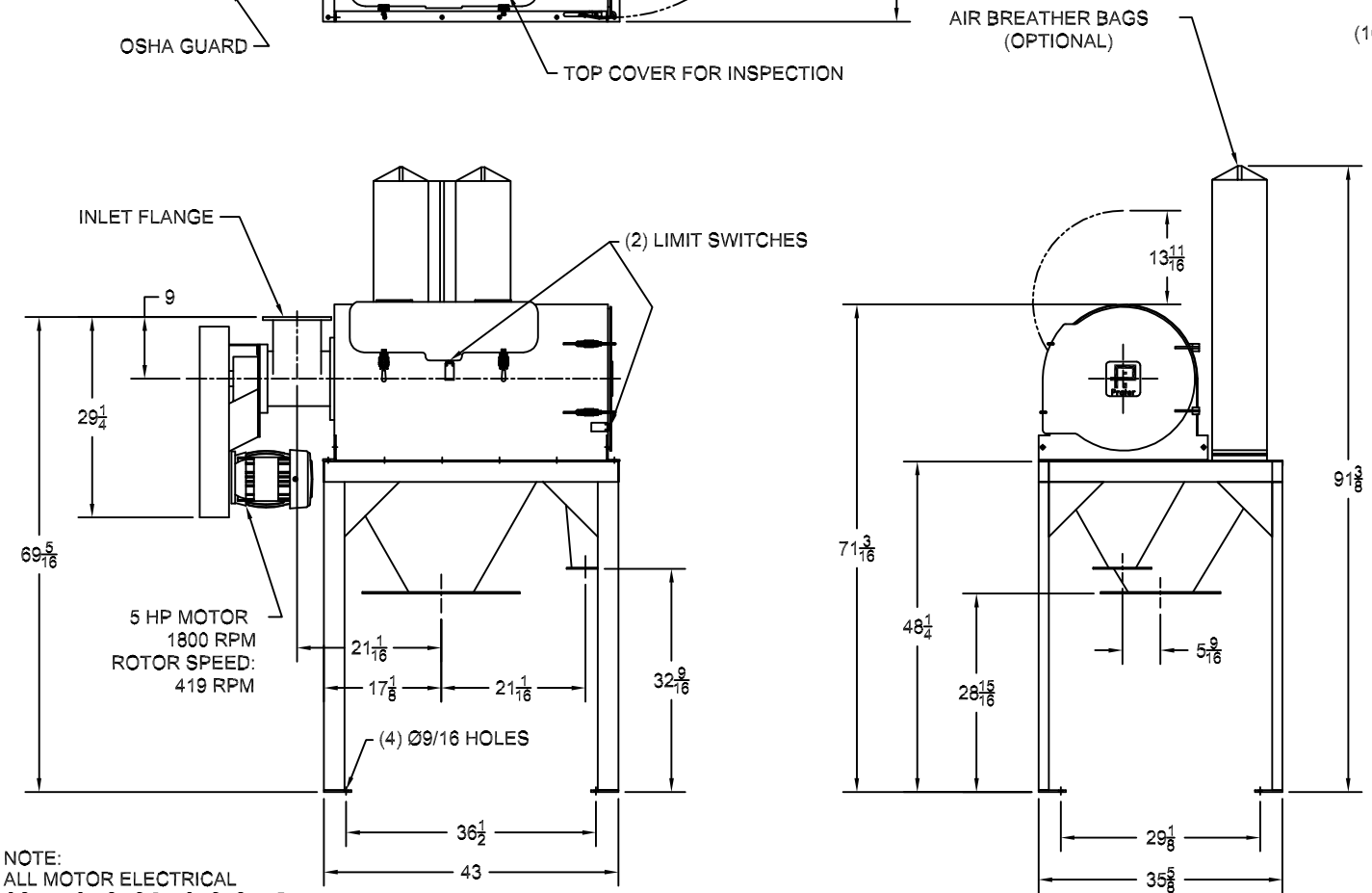

FINES HOPPER FLANGE

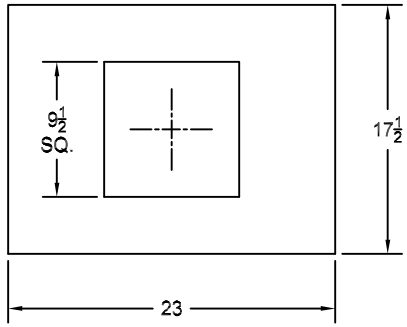

OVERS HOPPER FLANGE

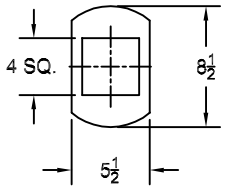

NOTE:
ALL MOTOR ELECTRICAL CONNECTIONS BY CUSTOMER