Prater-Sterling
2 SAMMONS COURT
BOLINGBROOK, IL 60440

STANDARD 301 ROTA SIEVE

DATE: 8-9-94	BY: K.K.	NUMBER: SK-2068-24
SCALE: 1/32=1	APP:	

REFERENCE DRAWING ONLY NOT TO BE USED FOR CONSTRUCTION UNLESS CERTIFIED

REV	DESCRIPTION	DATE	BY
A	ADDED STANDARD LIMIT SWITCH	1-19-96	K.K.

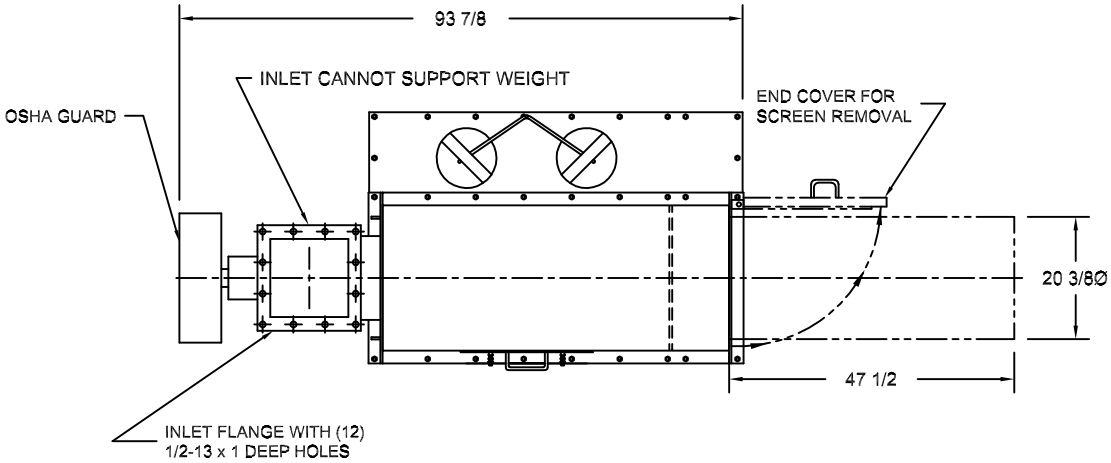

INLET FLANGE

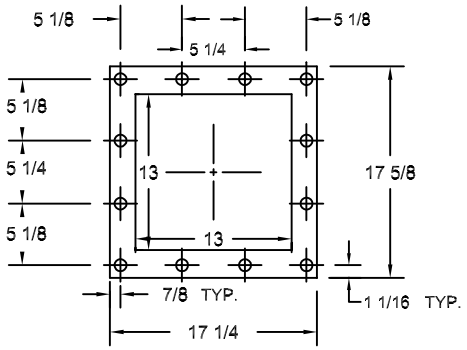

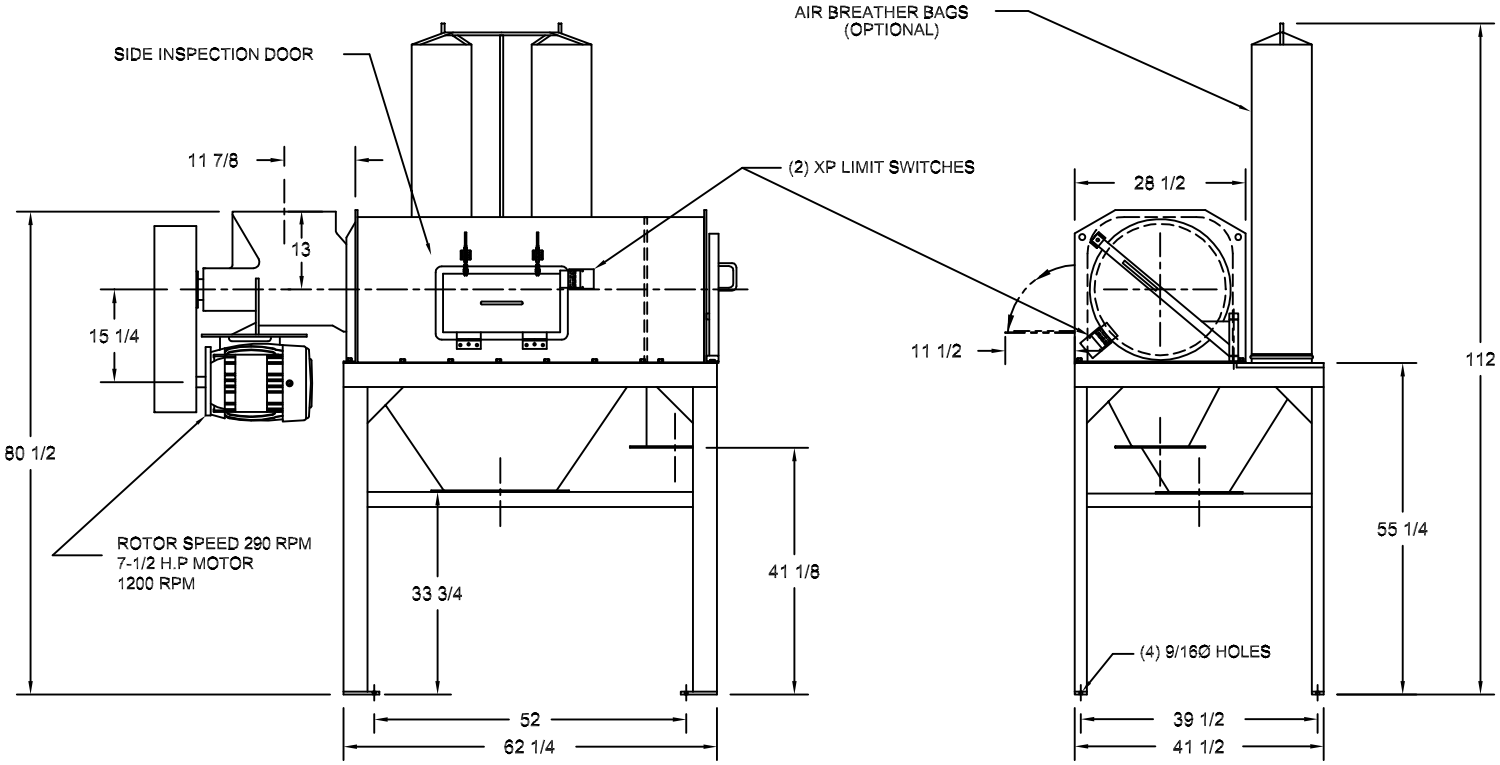

OVERS DISCHARGE FLANGE

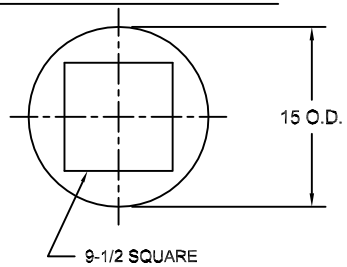
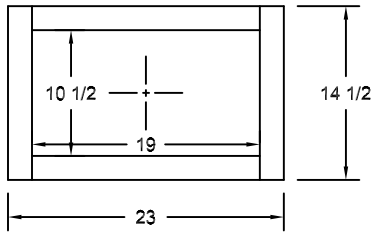
FINES DISCHARGE FLANGE