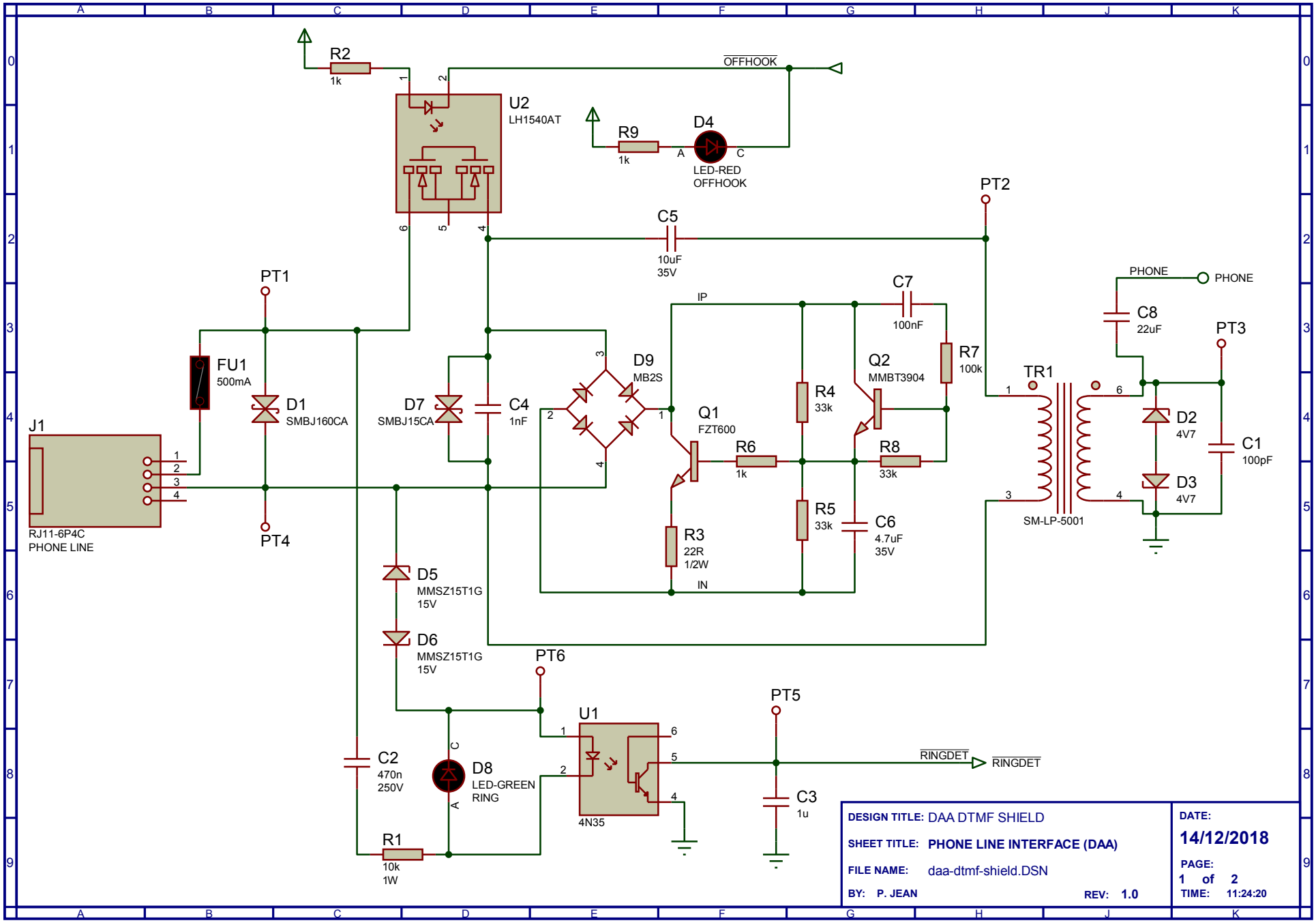
R2
1k
U2
LH1540AT
OFFHOOK
R9
1k
D4
LED-RED
OFFHOOK
PT2
C5
10uF
35V
PT1
FU1
500mA
D1
SMBJ160CA
J1
RJ11-6P4C
PHONE LINE
PT4
D7
SMBJ15CA
C4
1nF
D9
MB2S
IP
IN
Q1
FZT600
R6
1k
R3
22R
1/2W
R4
33k
R5
33k
C7
100nF
Q2
MMBT3904
R7
100k
R8
33k
C6
4.7uF
35V
TR1
SM-LP-5001
PHONE
C8
22uF
PT3
D2
4V7
D3
4V7
C1
100pF
D5
MMSZ15T1G
15V
D6
MMSZ15T1G
15V
PT6
U1
4N35
PT5
C2
470n
250V
D8
LED-GREEN
RING
R1
10k
1W
C3
1u
RINGDET
DESIGN TITLE: DAA DTMF SHIELD
SHEET TITLE: PHONE LINE INTERFACE (DAA)
FILE NAME: daa-dtmf-shield.DSN
BY: P. JEAN
REV: 1.0
DATE:
14/12/2018
PAGE:
1 of 2
TIME: 11:24:20

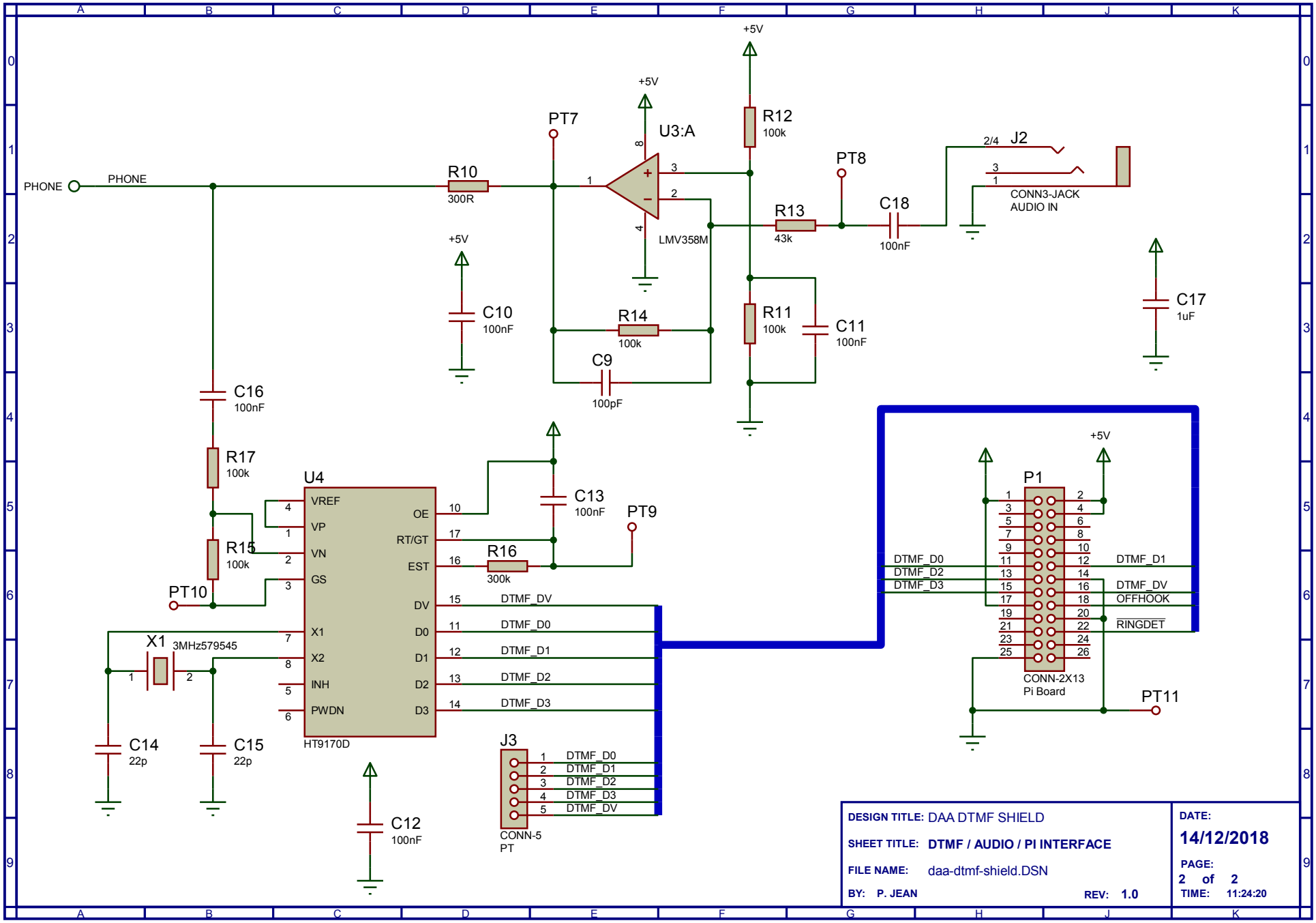
PHONE
PHONE
R10
300R
PT7
+5V
U3:A
LMV358M
R12
100k
PT8
R13
43k
C18
100nF
2/4
J2
CONN3-JACK
AUDIO IN
C10
100nF
R14
100k
C9
100pF
R11
100k
C11
100nF
C17
1uF
C16
100nF
R17
100k
R15
100k
PT10
U4
VREF
VP
VN
GS
X1
X2
INH
PWDN
OE
RT/GT
EST
DV
D0
D1
D2
D3
HT9170D
C13
100nF
R16
300k
PT9
DTMF_DV
DTMF_D0
DTMF_D1
DTMF_D2
DTMF_D3
X1
3MHz579545
C14
22p
C15
22p
C12
100nF
J3
CONN-5
PT
P1
CONN-2X13
Pi Board
OFFHOOK
RINGDET
PT11
DESIGN TITLE: DAA DTMF SHIELD
SHEET TITLE: DTMF / AUDIO / PI INTERFACE
FILE NAME: daa-dtmf-shield.DSN
BY: P. JEAN
REV: 1.0
DATE:
14/12/2018
PAGE:
2 of 2
TIME: 11:24:20