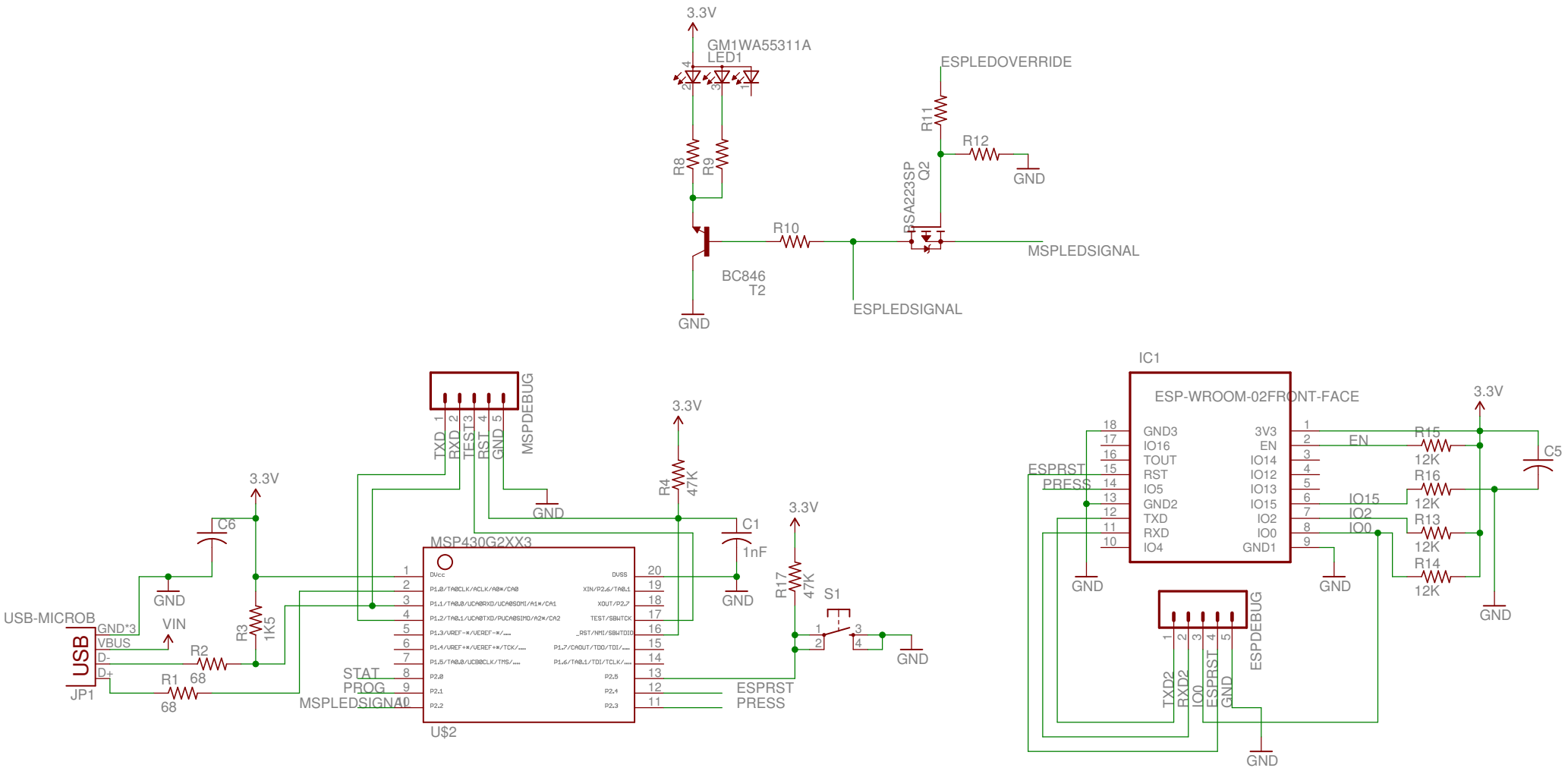
3.3V
GM1WA55311A
LED1
ESPLEDOVERRIDE
R11
R12
GND
R8
R9
BSA223SP
Q2
R10
MSPLEDSIGNAL
BC846
T2
ESPLEDSIGNAL
GND
MSPDEBUG
TXD
RXD
TEST3
RST
GND
3.3V
R4
47K
C1
1nF
GND
3.3V
R17
47K
S1
GND
3.3V
C6
GND
USB-MICROB
USB
GND*3
VBUS
D-
D+
JP1
VIN
R2
68
R1
68
R3
1K5
MSP430G2XX3
DVcc
P1.0/TA0CLK/ACLK/A0*/CA0
P1.1/TA0.0/UCA0RXD/UCA0SOMI/A1*/CA1
P1.2/TA0.1/UCA0TXD/PUCA0SIMO/A2*/CA2
P1.3/VREF-*/VEREF-*/....
P1.4/VREF+*/VEREF+*/TCK/....
P1.5/TA0.0/UCB0CLK/TMS/....
P2.0
P2.1
P2.2
DVSS
XIN/P2.6/TA0.1
XOUT/P2.7
TEST/SBWTCK
_RST/NMI/SBWTDIO
P1.7/CAOUT/TDO/TDI/....
P1.6/TA0.1/TDI/TCLK/....
P2.5
P2.4
P2.3
STAT
PROG
MSPLEDSIGNAL
ESPRST
PRESS
U$2
IC1
ESP-WROOM-02FRONT-FACE
GND3
IO16
TOUT
RST
IO5
GND2
TXD
RXD
IO4
3V3
EN
IO14
IO12
IO13
IO15
IO2
IO0
GND1
ESPRST
PRESS
EN
IO15
IO2
IO0
R15
12K
R16
12K
R13
12K
R14
12K
C5
GND
ESPDEBUG
TXD2
RXD2
IO0
ESPRST
GND

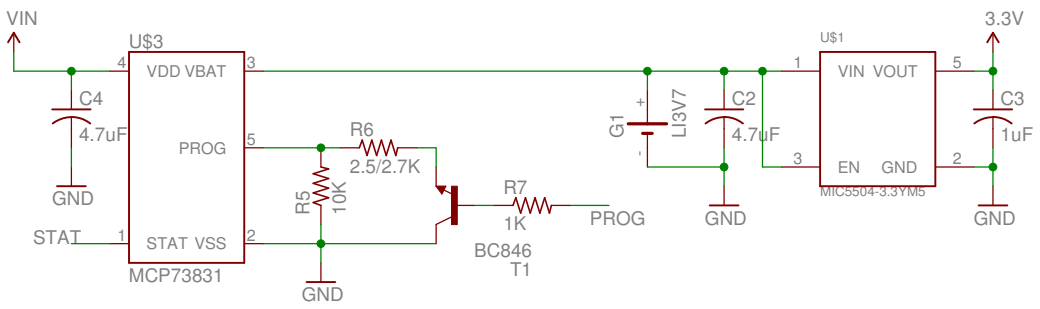
VIN
U$3
VDD VBAT
PROG
STAT VSS
MCP73831
C4
4.7uF
GND
STAT
R6
2.5/2.7K
R5
10K
GND
R7
1K
BC846
T1
PROG
G1
LI3V7
C2
4.7uF
GND
U$1
VIN VOUT
EN GND
MIC5504-3.3YM5
3.3V
C3
1uF
GND