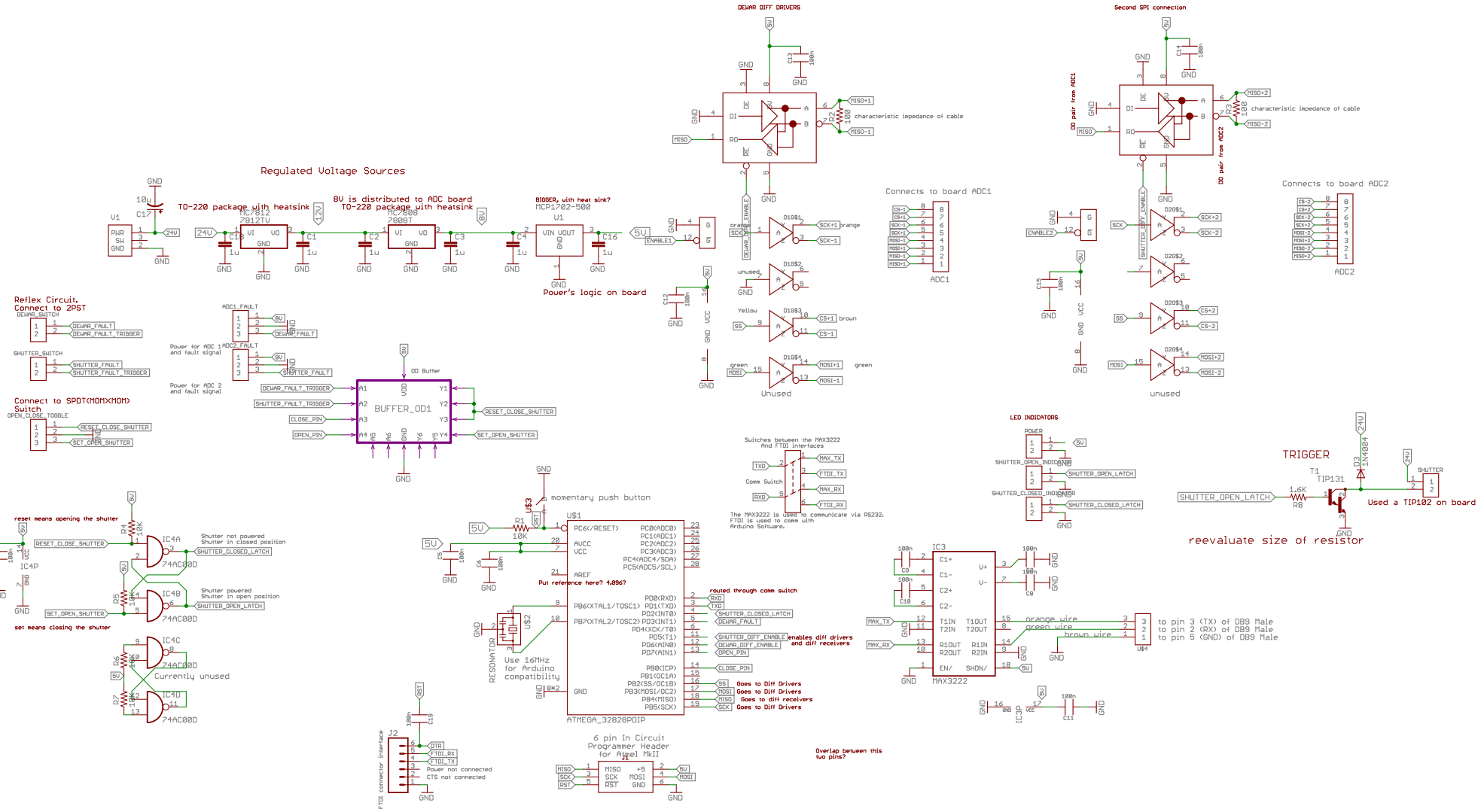
DEWAR DIFF DRIVERS
Second SPI connection
Regulated Voltage Sources
TO-220 package with heatsink
8V is distributed to ADC board
TO-220 package with heatsink
BIGGER, with heat sink?
Power's logic on board
characteristic impedance of cable
Connects to board ADC1
Connects to board ADC2
DD pair from ADC1
DD pair from ADC2
Reflex Circuit.
Connect to 2PST
Connect to SPDT(MOM)(MOM) Switch
OD Buffer
BUFFER_OD1
reset means opening the shutter
set means closing the shutter
Shutter not powered
Shutter in closed position
Shutter powered
Shutter in open position
Currently unused
Unused
Switches between the MAX3222 And FTDI interfaces
Comm Switch
The MAX3222 is used to communicate via RS232. FTDI is used to comm with Arduino Software.
LED INDICATORS
TRIGGER
Used a TIP102 on board
reevaluate size of resistor
momentary push button
Put reference here? 4.096?
routed through comm switch
enables diff drivers and diff receivers
Use 16MHz for Arduino compatibility
Goes to Diff Drivers
Goes to diff receivers
ATMEGA_32828PDIP
6 pin In Circuit Programmer Header for Atmel MkII
Overlap between this two pins?
FTDI connector interface
Power not connected
CTS not connected
orange wire
green wire
brown wire
to pin 3 (TX) of DB9 Male
to pin 2 (RX) of DB9 Male
to pin 5 (GND) of DB9 Male
MAX3222