Course: CEC300

Department of Electrical, Computer, Software, and Systems Engineering

FLORIDA
ARIZONA
WORLDWIDE

EMBRY-RIDDLE
Aeronautical University

ADS-B:
Automatic Dependent Surveillance - Broadcast

Notes based of “Digital Avionics Handbook” by Spitzer, Ferrell, Ferrell;
and different FAA and ICAO documents.

What is ADS-B?

- As an alternative to secondary surveillance radar, ADS-B broadcasts information about an aircraft's state within the airspace or on an airport surface.
  - Position, Horizontal Velocity, Vertical Velocity, Altitude (barometric and geodetic), and status information.
- Part of a collection of related tools to ensure interoperability between different aircraft types and their equipage.
- Provides position and velocity update information at 1 Hz.
- Two types in the United States:
  - 1090 Extended Squitter – over 18,000 ft. (uses Mode S transponder)
  - 978 MHz Universal Access Transceiver (UAT)

EMBRY-RIDDLE Aeronautical University

What is ADS-B? Continued…

- Automatic – does not require an interrogation, automatically broadcast during a specific time window each second.
- Dependent – enables cooperative sharing of aircraft information between airspace users
- Surveillance – used to identify aircraft within the airspace and the attributes about it (position, altitude, horizontal velocities, vertical velocities, etc.)
- Broadcast – information is broadcast such that a UAT or 1090 ES receiver can receive the information

EMBRY-RIDDLE Aeronautical University

Benefits of ADS-B

- Provides more information about the aircraft state and the estimated accuracy and integrity of the information shared.
- Informs not only ATC (like primary radar) but also other aircraft that can receive ADS-B input (ADS-B IN)
- Less expensive:
- ADS-B System at airport is at least an order of magnitude cheaper than (e.g. $400k to $4M.
- Less maintenance
- Lower cost set up
- Leverage existing infrastructure such as NDB towers
- Smaller “error tails” than radar.

EMBRY-RIDDLE Aeronautical University

Why is ADS-B?

ADS-B vs. RADAR

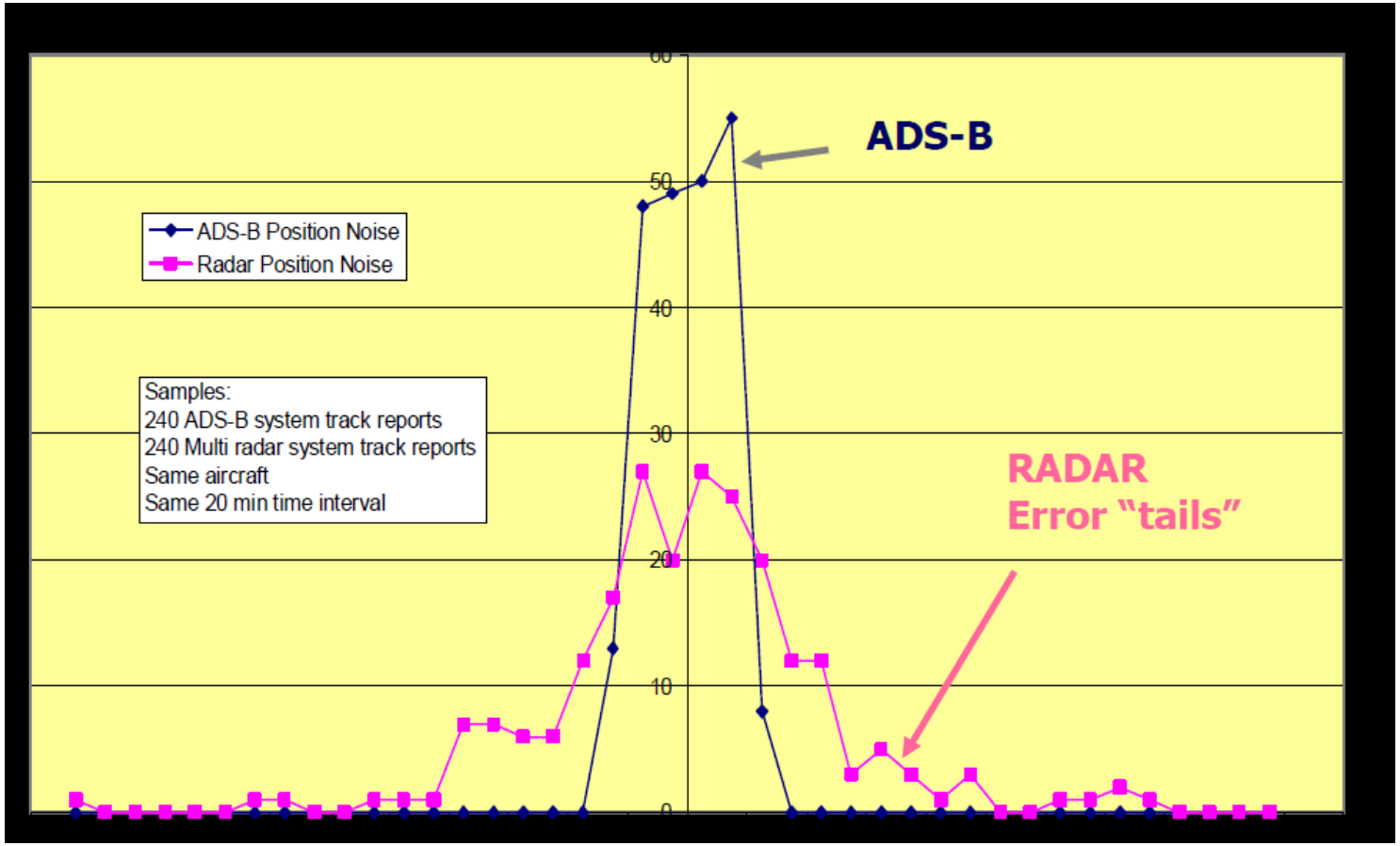

EMBRY-RIDDLE
Aeronautical University

Why is ADS-B?

Can be installed in existing VHF/Navaid sites?

• Source: MITRE

Slide courtesy of Nickolas Demidovich, FAA AST (Office of Commercial Space)

EMBRY-RIDDLE Aeronautical University

ADS-B Ground Station Equipment

Primarily it is a radio receiver that listens for ADS-B message and relays the information to the ADS-B infrastructure.

EMBRY-RIDDLE
Aeronautical University

ADS-B In vs. Out Transponders

ADS-B OUT

- Messages are sent from the aircraft, but no ADS-B messages are not received.
- Required for compliance so that ATC systems and suitably equipped aircraft can use the information for situational awareness and collision avoidance

ADS-B In

- Transponder receives the ADS-B messages from local air traffic, processes them, and displays this information on a suitable display such as:
- Glass cockpit display such as Garmin G1000 connected to a Garmin GDL 90 or GDL88 Transponder.

BOTH Require:

- Antennas at the top and bottom of the aircraft for broadcast and receipt.
- GPS hardware including antenna.

EMBRY-RIDDLE Aeronautical University

Other ADS-B Group Messages

ADS-R (Automatic Dependent Surveillance –Re-broadcast)

- Enables aircraft on 1090ES to see UAT aircraft updates, and vice-versa.
- Ground station receives each frequency and rebroadcasts messages to the other frequency.

TIS-B (Traffic Information System – Broadcast)

- Broadcasts traffic information collected by ATC from non-ADS-B equipped aircraft
- Includes ground-based traffic with the ASDE-X (Airport Surface Detection System – Model X)

FIS-B (Flight Information Services – Broadcast

- Ground-based system information is broadcast to suitably equipped UAT aircraft
- Includes aeronautical data, weather data, and information related to the status of the national airspace to keep pilots informed.

EMBRY-RIDDLE Aeronautical University

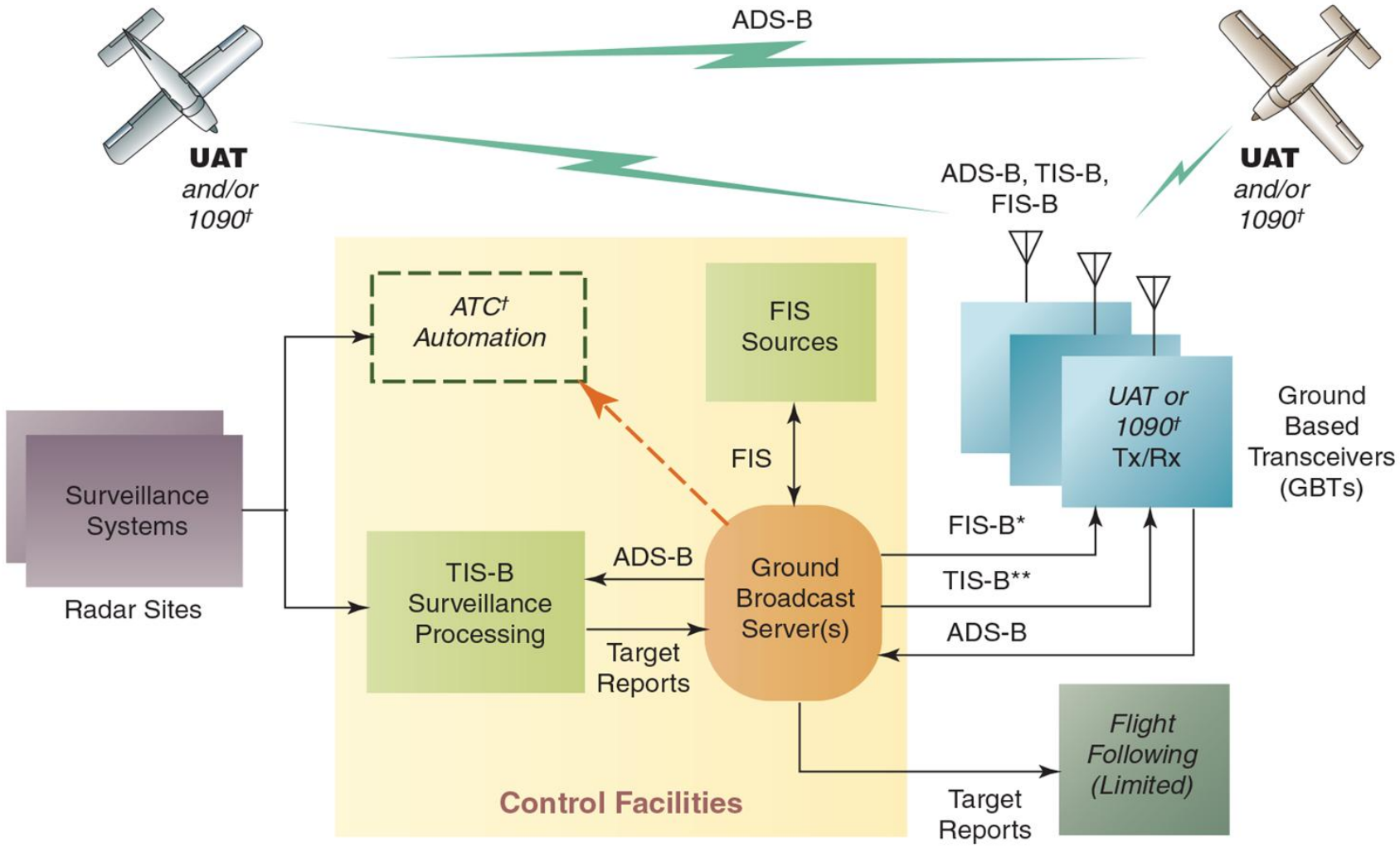

Identifies: Initial System Capabilities
†Future System Capabilities

UAT = Universal Access Transceiver

* No FIS-B over 1090 links
** TIS-B over 1090 NOT available at present

EMBRY-RIDDLE
Aeronautical University

Understanding ADS-B Airspace

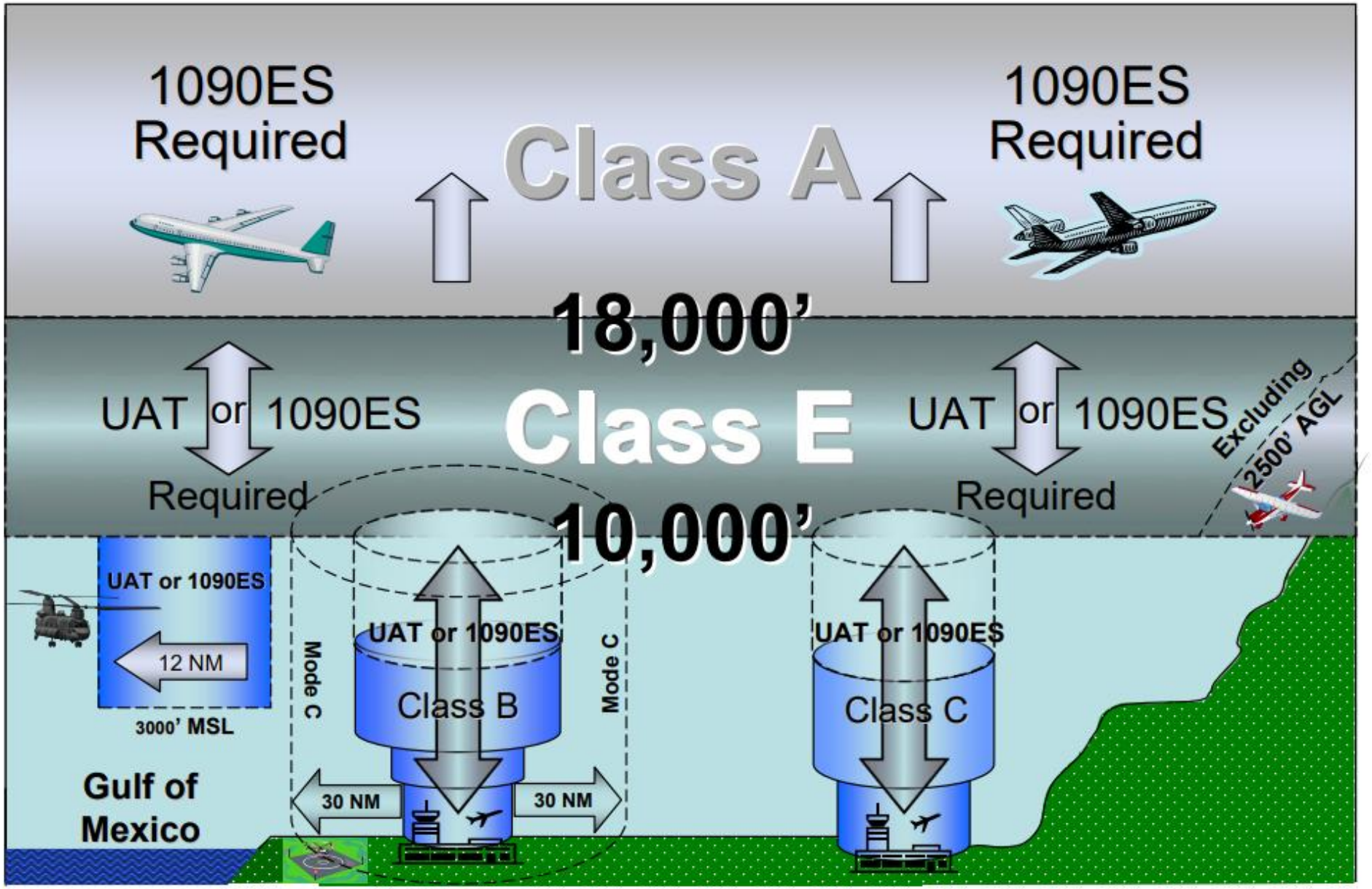

Visit https://www.faa.gov/nextgen/equipadsb/airspace/

RIDDLE University

WHERE IS ADS-B OUT REQUIRED?

The FAA requires ADS-B Out capability in the continental United States, in the ADS-B rule airspace designated by FAR 91.225:

- Class A, B, and C airspace;
- Class E airspace at or above 10,000 feet msl, excluding airspace at and below 2,500 feet agl;
- Within 30 nautical miles of a Class B primary airport (the Mode C veil);
- Above the ceiling and within the lateral boundaries of Class B or Class C airspace up to 10,000 feet;
- Class E airspace over the Gulf of Mexico, at and above 3,000 feet msl, within 12 nm of the U.S. coast.

Where is ADS-B Out Required? - AOPA

EMBRY-RIDDLE Aeronautical University

ADS-B OUT

TABLE 23.1 ADS-B OUT Data Links

Link	Applicable Standard	Description	Applicability
ADS-B 1090 MHz extended squitter (1090ES)	RTCA DO-260B	An extension of the Mode-S technology in which 1090ES avionics periodically broadcast short ADS-B messages at 1090 MHz that provide their identity (24-bit address), vehicle state (position, velocity), and other aircraft status information	1090ES has been internationally coordinated as the globally harmonized interoperable data link for ADS-B that is being used throughout most of the world including the United States, Canada, Central America, Europe, Asia, and the Pacific. In the United States, which allows either 1090ES or UAT, 1090ES is applicable to aircraft that fly anywhere in the U.S. national airspace, including high-altitude airspace above FL180.
Universal access transceiver (UAT)—978 MHz	RTCA DO-282B	ADS-B technology in which UAT avionics periodically transmit messages at 978 MHz that provide their identity, vehicle state, and other status information	Applicable to aircraft flying in the U.S. national airspace below FL180 (mainly general aviation aircraft).
ADS-B VHF data link mode 4 (VDL-M4)	EUROCAE ED-108A	ADS-B technology in which VDL-M4 avionics periodically transmit messages in the allocated ADS-B OUT 25 kHz channel in the VHF band (117.975–137 MHz) that provides their identity, vehicle state, and other status information	ADS-B link used by a few regional implementations in the world, for example, in the Scandinavian countries of Northern Europe.

ADS-B OUT

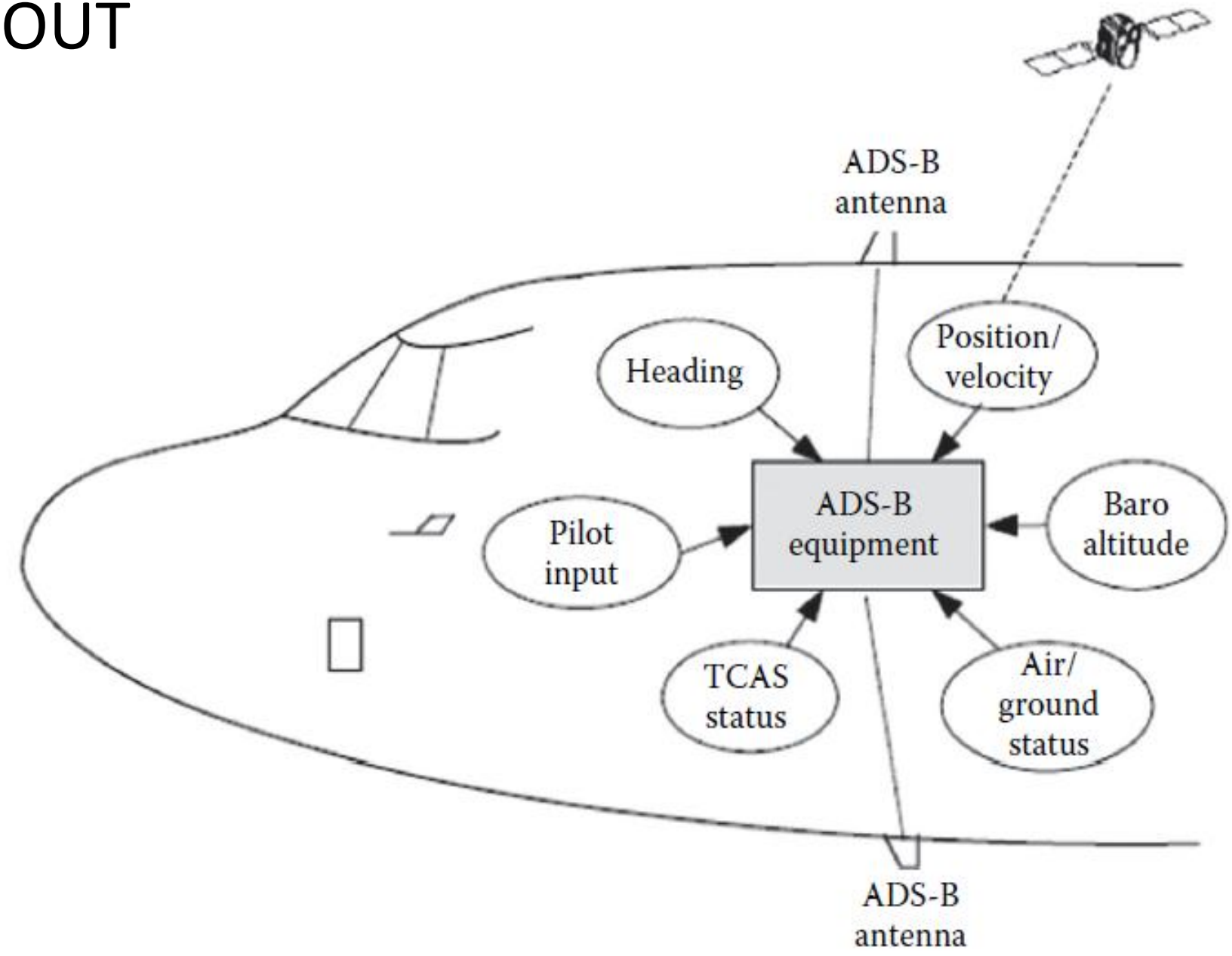
ADS-B
antenna
Heading
Position/
velocity
ADS-B
equipment
Baro
altitude
Pilot
input
TCAS
status
Air/
ground
status
ADS-B
antenna

ATCRBS - Background

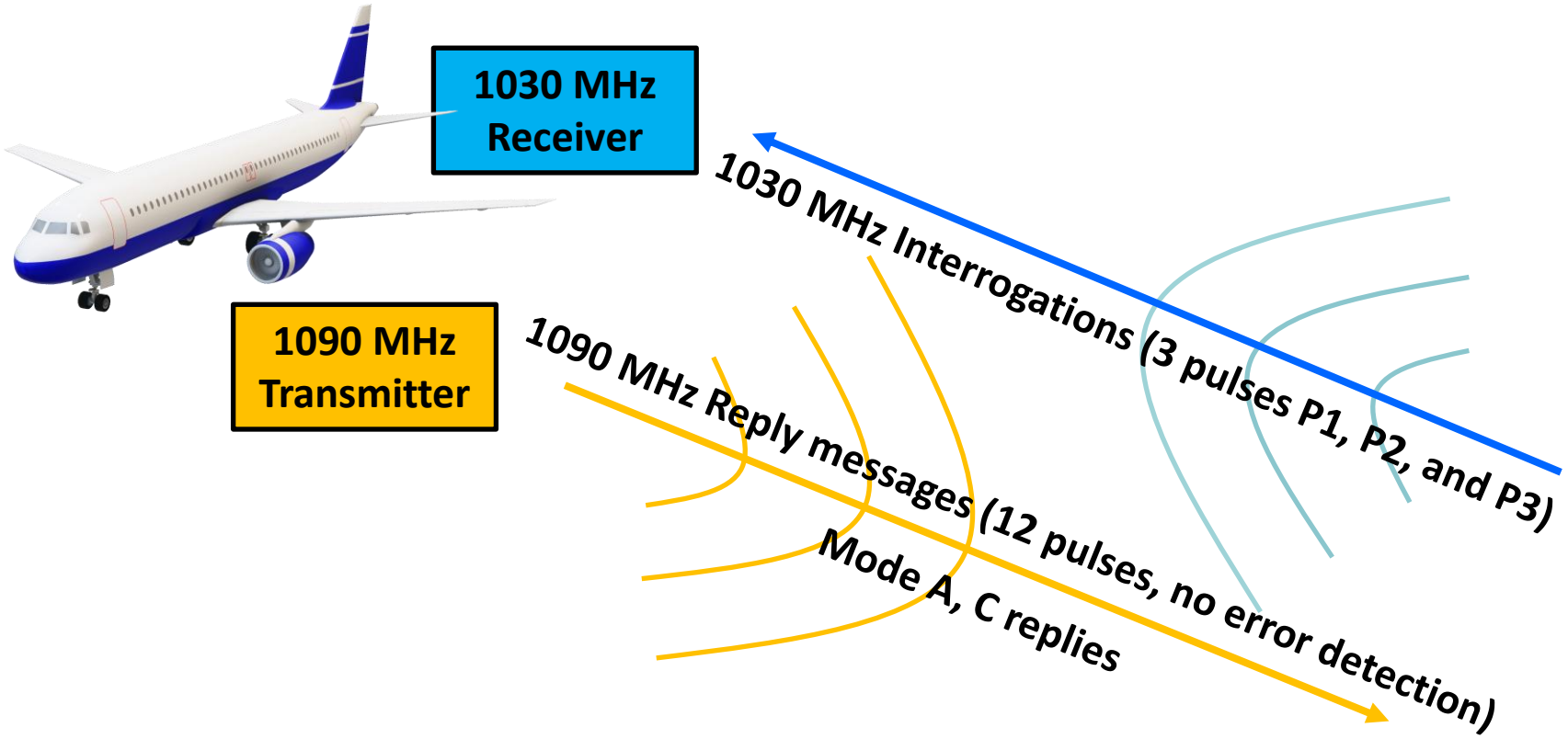

EMBRY-RIDDLE Aeronautical University

Mode S - Background

1030 MHz Receiver

1090 MHz Transmitter

1030 MHz register request (phased encoded message)

1030 MHz Interrogations (3 pulses P1, P2, and P3)

1090 MHz Reply messages (12 pulses, no error detection)

Mode A, C replies

1090 MHz reply messages (pulse position modulated with error detection)

Readout:
Registers

EMBRY-RIDDLE Aeronautical University

TCAS - Background

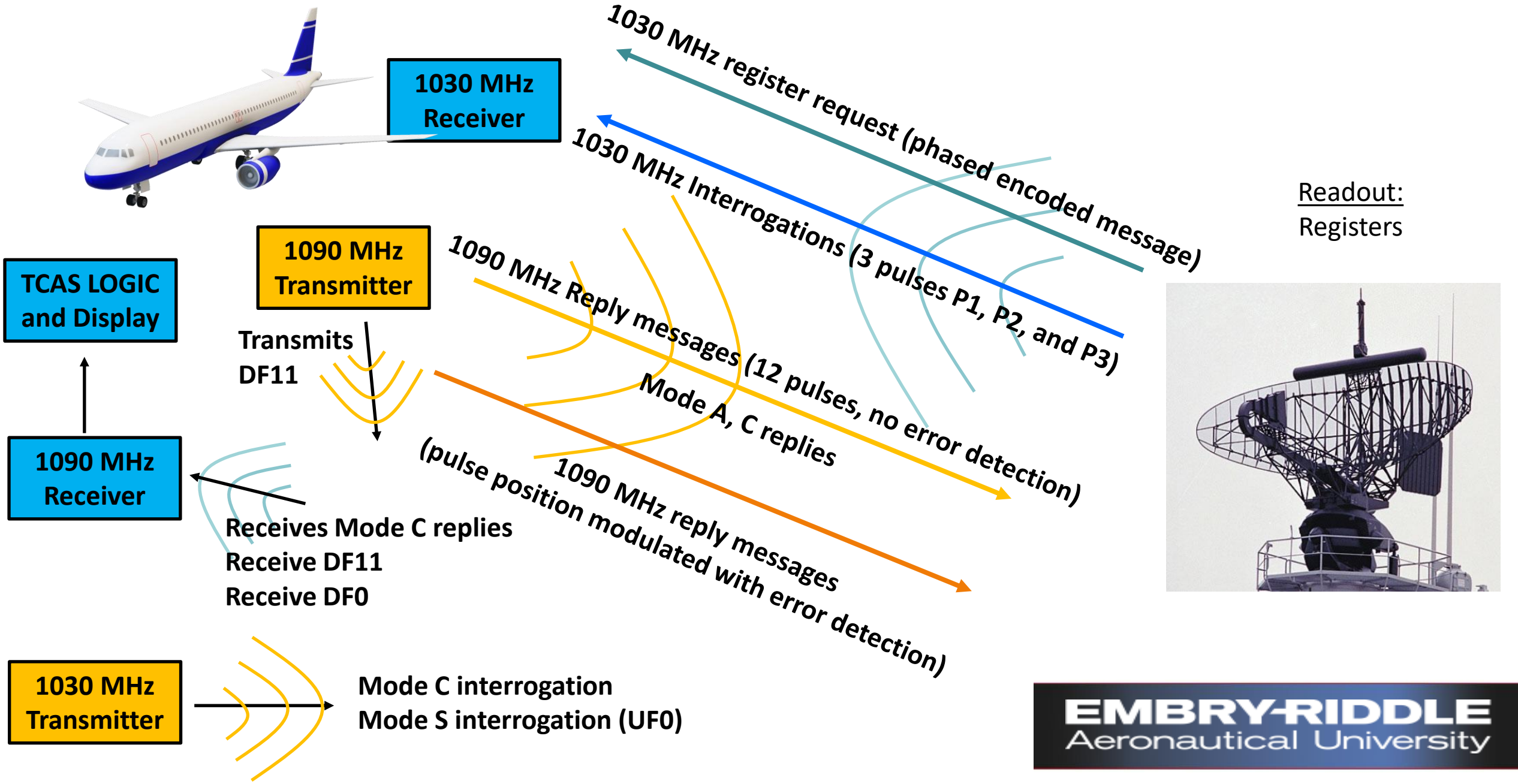

EMBRY-RIDDLE Aeronautical University

ADS-B - Background

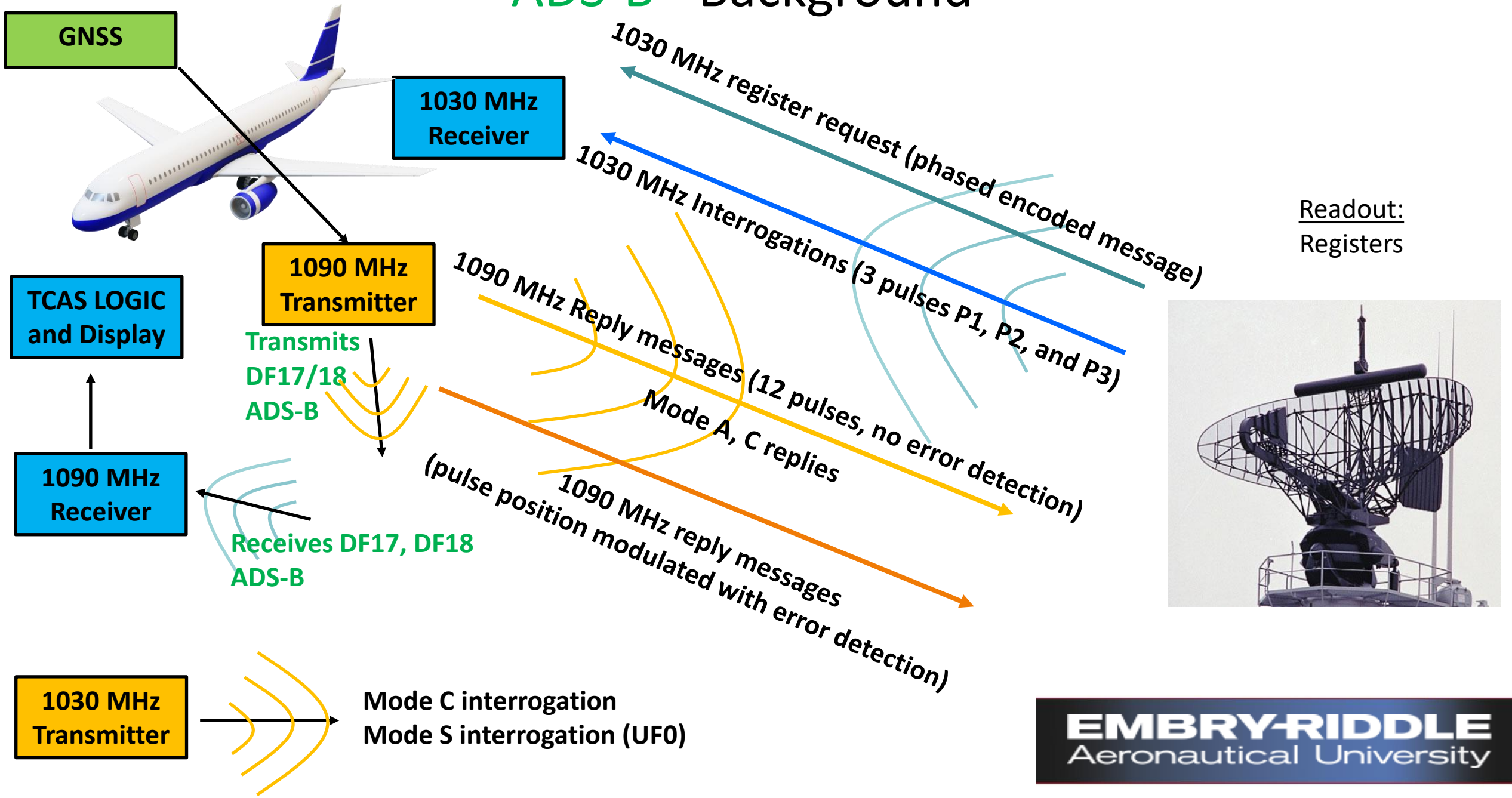

EMBRY-RIDDLE Aeronautical University

ADS-B

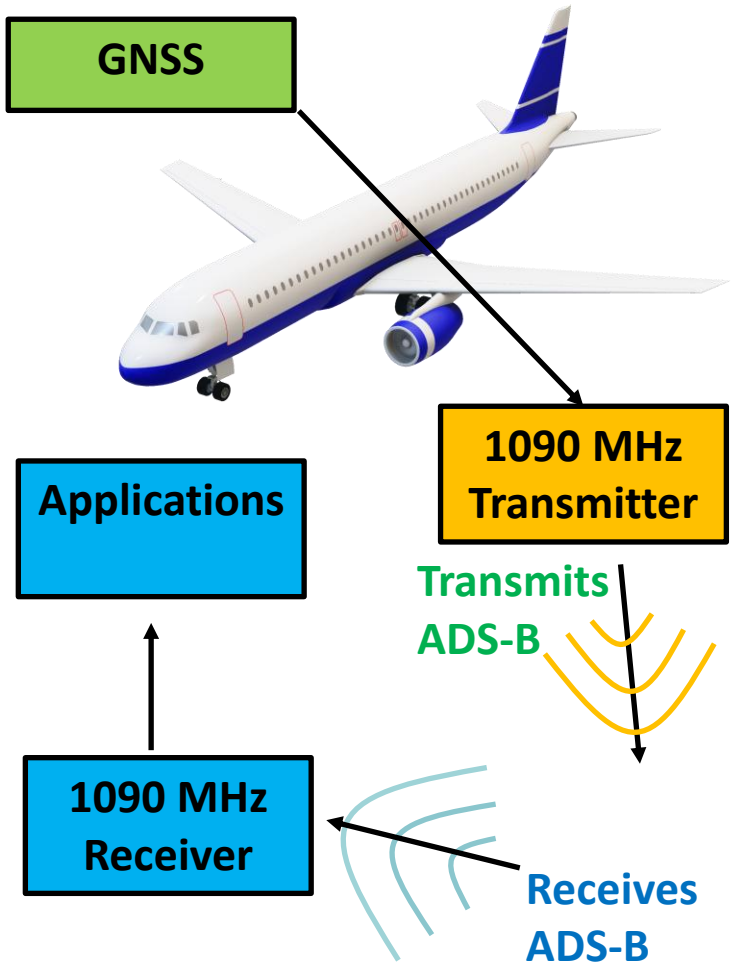

ADS-B OUT

ADS-B IN

EMBRY-RIDDLE Aeronautical University

1090ES Message Specification

(a)

(b)

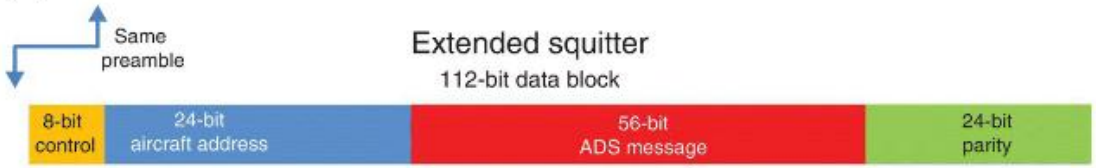

(c)

Information in ADS-B message

Airborne position squitter

No. bits	Information
5	Format type code
2	Surveillance status
1	Single antenna flag
12	Altitude
1	Timeflag (UTC)
1	CPR format flag
17	CPR encoded latitude
17	CPR encoded latitude
56	Total

Broadcast rate = 2/second
Accuracy ~ 5 m

Surface position squitter

No. bits	Information
5	Format type code
7	Movement
1	Status
7	Ground track
1	Time flag (UTC)
1	CPR format flag
17	CPR encoded latitude
17	CPR encoded latitude
56	Total

Broadcast rate = 1/second
Accuracy ~ 1.2 m

Airborne velocity squitter

No. bits	Information
5	Format type code
3	Subtype
1	Intent change flag
1	IFR capability flag
3	Velocity uncertainty
10+1	East-West velocity + sign
10+1	North-South velocity + sign
9+1+1	Vertical rate + sign + source
2	Turn indicator
7+1	Height diff. from barometric + sign
56	Total

Broadcast rate = 2/second
Accuracy ~ 1.2 m

Aircraft identification squitter

No. bits	Information
5	Format type code
3	Aircraft category
6	Callsign character 1
6	Callsign character 2
6	Callsign character 3
6	Callsign character 4
6	Callsign character 5
6	Callsign character 6
6	Callsign character 7
6	Callsign character 8
56	Total

Broadcast rate = 0.2/second

EMBRY-RIDDLE Aeronautical University

UAT Message Formats

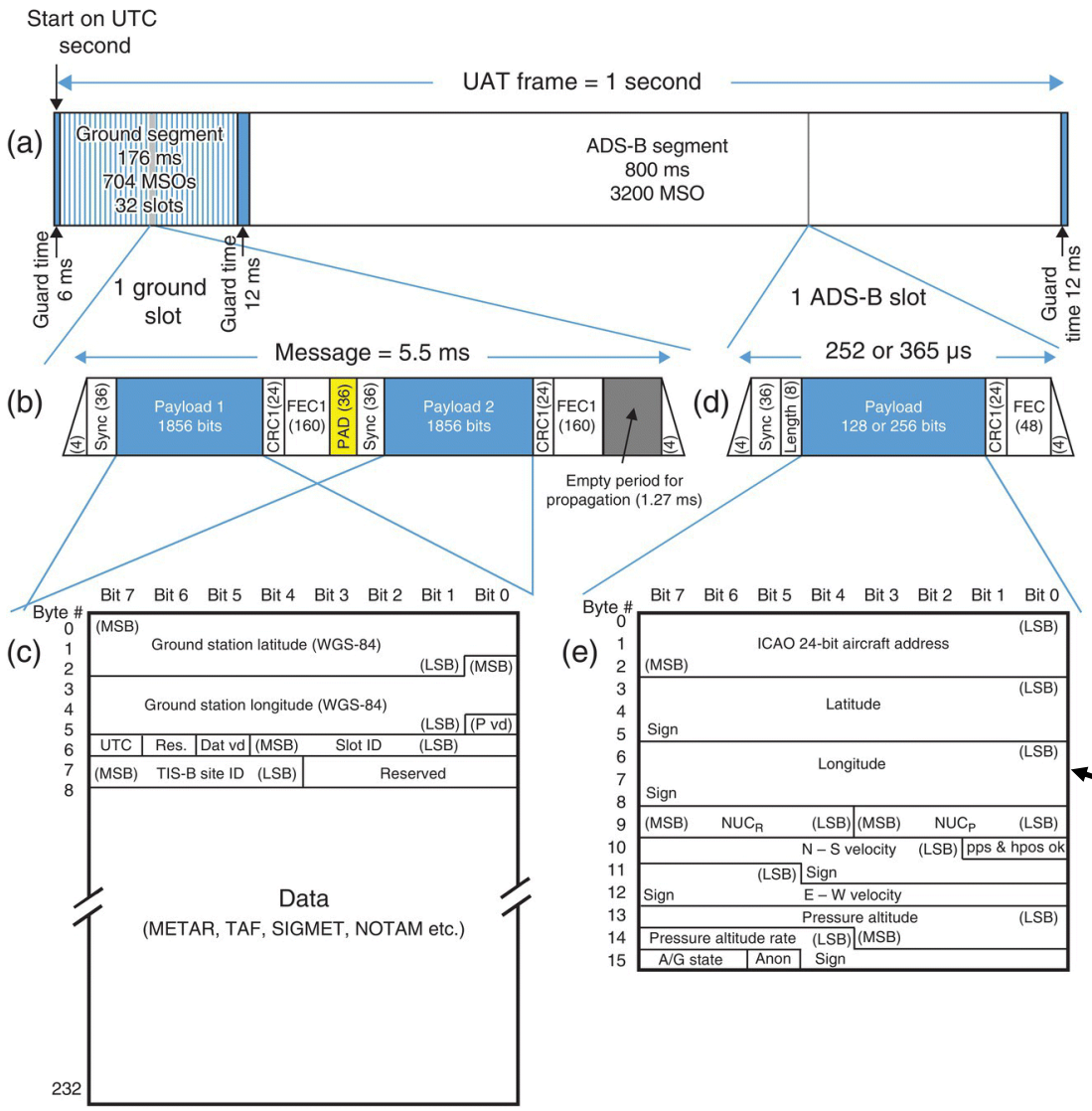

Legend

Sync: Synchronisation (message start code) = $00010101001100100010010110110001110 1_2 = 153225B1D_{16}$ for ground segment and $11101010110011011101101001001110001 0_2 = EACDDA4E2_{16}$ for ADS-B
CRC: Cyclic redundancy check
FEC: Forward error correcting
TIS-B: Traffic information service - broadcast
MSB: Most significant bit
LSB: Least significant bit
NUC_R: Navigation uncertainty category for velocity
NUC_P: Navigation uncertainty category for position

<u>Out of date:</u> See next Slide for the current DO-282B defined UAT Message.

EMBRY-RIDDLE Aeronautical University

UAT ADS-B Out Payload

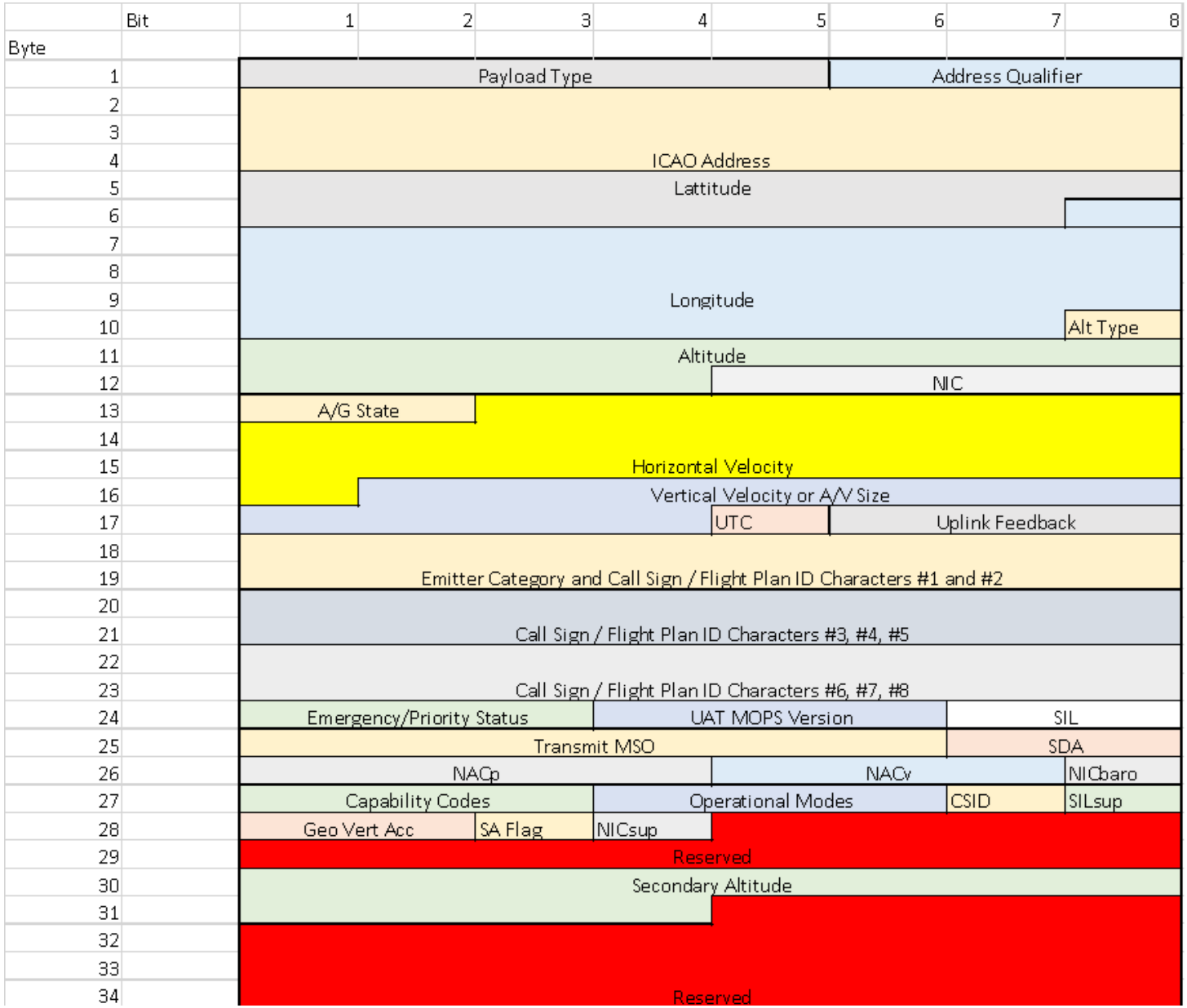

Primary and Auxiliary Message Payload shown

Message Broadcast once per second

Defined in:

RTCA DO-282B: Minimum Operational Performance Standards for Universal Access Transceiver (UAT) Automatic Dependent Surveillance – Broadcast

EMBRY-RIDDLE Aeronautical University

Quality Values in UAT Message

a) NACp (Navigation Accuracy Category for Position): This field indicates the accuracy of the position of the aircraft being transmitted.

b) NACv (Navigation Accuracy Category for Velocity): This field indicates the navigation accuracy for the velocity of the aircraft being transmitted.

c) NIC (Navigation Integrity Category): The NIC coding is used to indicate the containment radius around the aircraft.

d) SDA (System Design Assurance): Measures the probability of incorrect data being sent.

e) SIL (Surveillance/Source Integrity Level): Measurement of the probability of not being within the containment radius.

f) SILs (Surveillance/Source Integrity Level Supplement): This is a one-bit field that informs the system if the SIL is administered per hour or per sample. It is not considered a priority parameter.

g) SQL (Signal Quality Level): Measurement of the integrity of the data sent.

From: https://www.icao.int/NACC/Documents/Meetings/2023/ECARNTG12/ECARRD10-03.pdf

EMBRY-RIDDLE Aeronautical University

ADS-B IN Applications

TABLE 23.2 ADS-B IN Airborne Applications

Application Category	Name	Acronym	System Requirements	Avionics Requirements	Application Description
Situational awareness	Airborne situational awareness	AIRB	DO-319	DO-317	Provides situational awareness of airborne traffic
	Airport surface situational awareness	SURF	DO-322	DO-317	Provides situational awareness of traffic on the airport surface and airborne traffic near the runways
Extended situational awareness	Visual separation on approach	VSA	DO-314	DO-317	Assists pilots in acquiring and maintaining visual contact with preceding aircraft during visual separation on approach
	Oceanic in-trail procedure	ITP	DO-312	DO-317	Assists pilots in determining whether the initiation criteria for oceanic climb or descend through are satisfied
	Airport surface situational awareness with indications and alerts	SURF IA	DO-323	To be established	Provides situational awareness of traffic on the airport surface and airborne traffic near the runways with indications and alerts
	Traffic situational awareness with alerts	TSAA	DO-338	To be established	Airborne traffic situational awareness with advisories and alerts to support visual acquisition and avoidance of traffic

RY-RIDDLE
tical University

ADS-B IN Applications

Spacing	Flight deck interval management—spacing	FIM-S	DO-328	To be established	Flight deck–based interval management for achieving or maintaining longitudinal spacing from one or more designated aircraft
Delegated separation	Independent closely spaced parallel approaches	ICSPA	DO-289	To be established	Airborne application to support conducting independent, simultaneous approaches to closely spaced parallel runways in instrument meteorological conditions
	CDTI-enabled delegated separation	CEDS	N/A	To be established	Airborne application to support pilots with safely separating from designated aircraft
Self-separation	Airborne conflict management	ACM	DO-289	To be established	Application to prevent loss of separation (conflict detection and resolution) and provide advisory information for trajectories that may cause a conflict (conflict prediction)

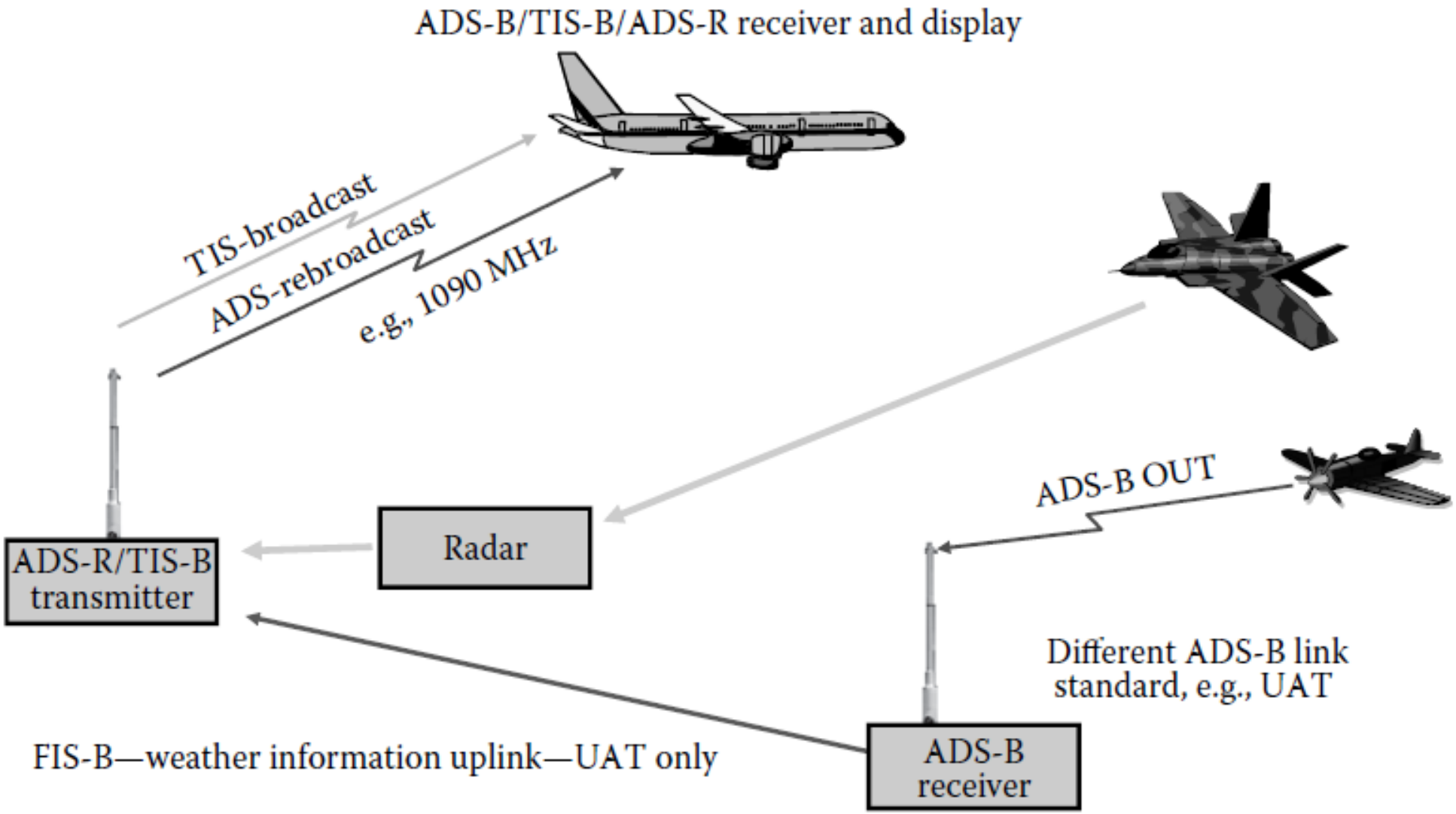

ADS-R relays ADS-B information from one link onto a second data link. TIS-B provides surveillance information for aircraft that are not transmitting ADS-B OUT.

RIDDLE University

ADS-B Challenges

1- Spectrum congestion at 1090 MHz

Hybrid system can help reducing congestion (ADS-B + TCAS).

2- GNSS not available

Have backup surveillance systems such as Mode S.

Airlines will be required to check GNSS coverage before taking off.

3- Privacy of operations

ADS-B standards for anonymous identifiers.

4- Malicious spoofing

Have backup surveillance systems such as Mode S.

EMBRY-RIDDLE Aeronautical University

Current Issue

- Lack of privacy – ADS-B messages are not encrypted
  - This is good news for sites like FlightRadar24.
- Dependent upon status of GPS and its reception by aircraft
- 1 Hz is too slow
- 1090ES congestion (must deal with Mode A/C and Mode S transponders)
- Easy to spoof
- Expanding to more types of operations

EMBRY-RIDDLE Aeronautical University

ADS-B using Satellites

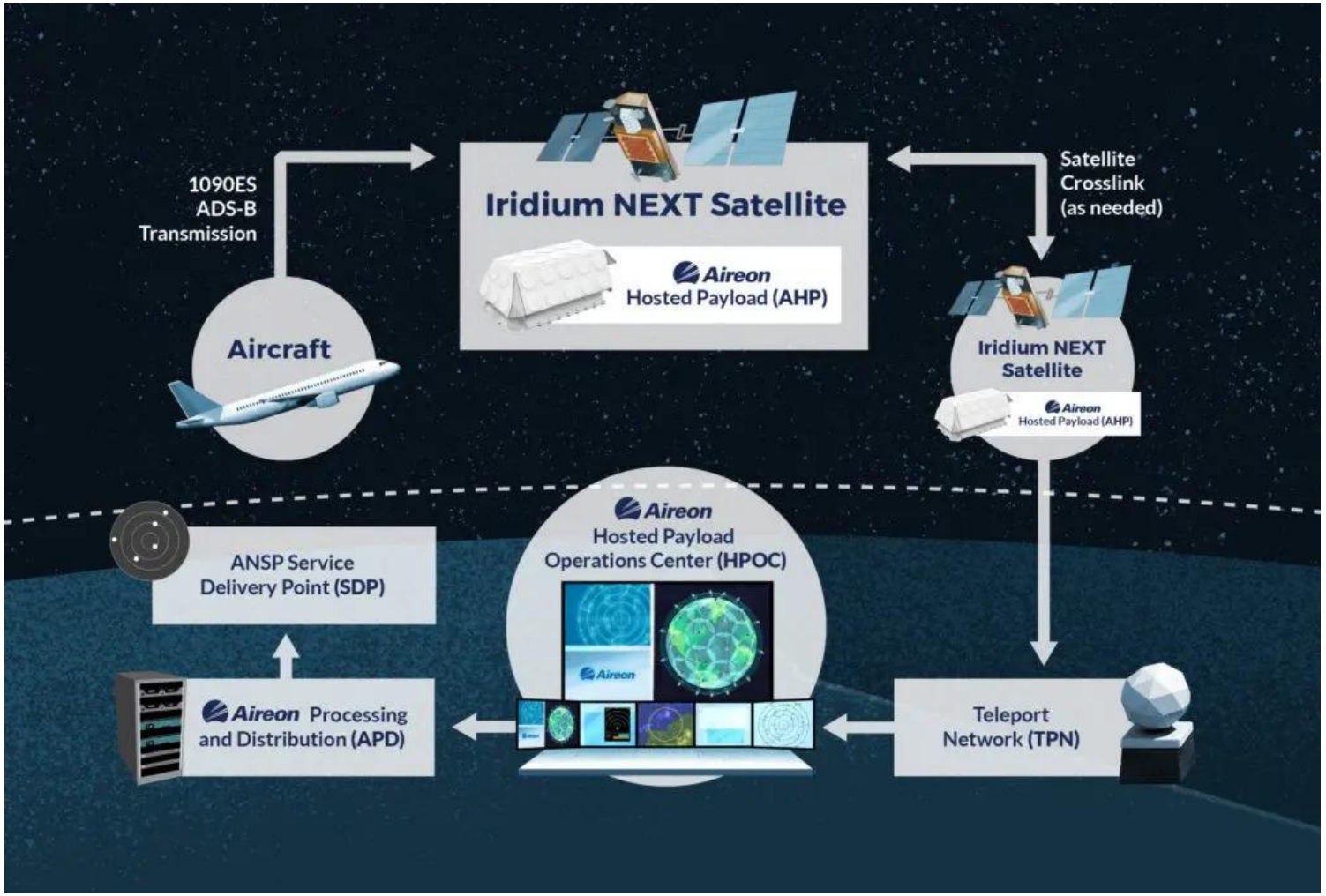

[Back-to-Basics (Part 2): All Things Automatic Dependent Surveillance-Broadcast (ADS-B) - Aireon - Space-Based ADS-B Global Air Traffic Surveillance and Tracking]

EMBRY-RIDDLE
Aeronautical University