RWTH Aachen University

Erdi Sayar
Matrikel Number : 381171

Modern Control Matlab Project

Instructor: Prof.Dr Antonello Monti

August 13, 2018

Signature:

Modern Contron Projects

Control Design With Coupling

Now, we consider coupling blocks and design PI controller , which is illustrated in Fig.1

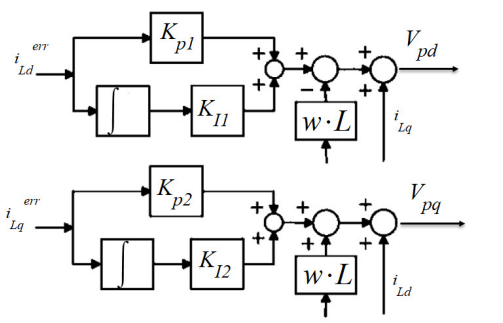

Figure 1: Block diagram of d-q current regulators with decoupling controllers.

In Matlab/Simulink , we can implement PI controller in either a state-space represantation or a Laplace domain. Both methods are implemented in the Simulink.

State Space PI Controller $\dot{x} = Ax + Bu$

Before writing PI controller as a state space model,we have to determine what are the states,inputs and outputs. Firtly , states are chosen in the following.

$$x = \begin{bmatrix} q_{Ld}^{err} \\ q_{Lq}^{err} \end{bmatrix} \tag{1}$$

where $q_{Ld}^{err} = \int i_{Ld}^{err} dt$, $q_{Lq}^{err} = \int i_{Lq}^{err} dt$
Inputs are chosen in the following.

$$u = \begin{bmatrix} i_{Ld}^{err} \\ i_{Lq}^{err} \\ i_{Ld} \\ i_{Lq} \\ V_{gd} \\ V_{gq} \end{bmatrix} \tag{2}$$

Outputs are chosen in the following.

$$y = \begin{bmatrix} V_{pd} \\ V_{pq} \end{bmatrix} \tag{3}$$

Let's write differential equation corresponding to Fig.1.

$$V_{pd} = K_{p1} \cdot i_{Ld}^{err} + K_{I1} \cdot \int i_{Ld}^{err} dt + V_{gd} - wL_t i_{Lq} \tag{4}$$

$$V_{pq} = K_{p2} \cdot i_{Lq}^{err} + K_{I2} \cdot \int i_{Lq}^{err} dt + V_{gq} + wL_t i_{Ld} \tag{5}$$

Let's express these differential equations as a state-space model.[1]

$$\dot{x} = \begin{bmatrix} 0 & 0 \\ 0 & 0 \end{bmatrix} \cdot \begin{bmatrix} q_{Ld}^{err} \\ q_{Lq}^{err} \end{bmatrix} + \begin{bmatrix} 1 & 0 & 0 & 0 & 0 \\ 0 & 1 & 0 & 0 & 0 \end{bmatrix} \cdot \begin{bmatrix} i_{Ld}^{err} \\ i_{Lq}^{err} \\ i_{Ld} \\ i_{Lq} \\ V_{gd} \\ V_{gq} \end{bmatrix} \tag{6}$$

$$y = \begin{bmatrix} K_{I1} & 0 \\ 0 & K_{I2} \end{bmatrix} \cdot \begin{bmatrix} q_{Ld}^{err} \\ q_{Lq}^{err} \end{bmatrix} + \begin{bmatrix} K_{p1} & 0 & 0 & -wL_t & 1 & 0 \\ 0 & K_{p2} & wL_t & 0 & 0 & 1 \end{bmatrix} \cdot \begin{bmatrix} i_{Ld}^{err} \\ i_{Lq}^{err} \\ i_{Ld} \\ i_{Lq} \\ V_{gd} \\ V_{gq} \end{bmatrix} \tag{7}$$

Implementation of Eq.8 and Eq.9 in Matlab/Simulink is shown in the Fig. 2 and Fig. 3

[1] for explicit and better explanation.[1]

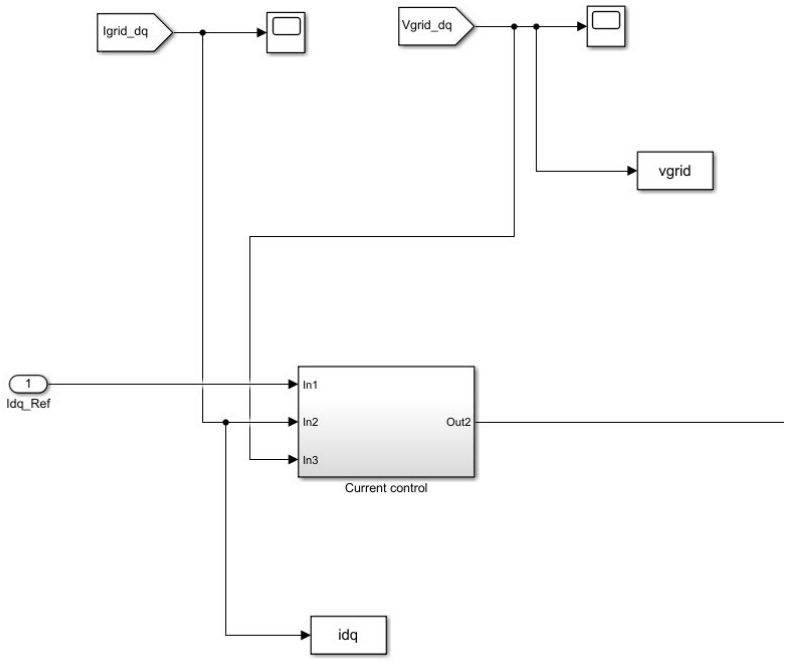

Figure 2: Subsystem for PI current controller

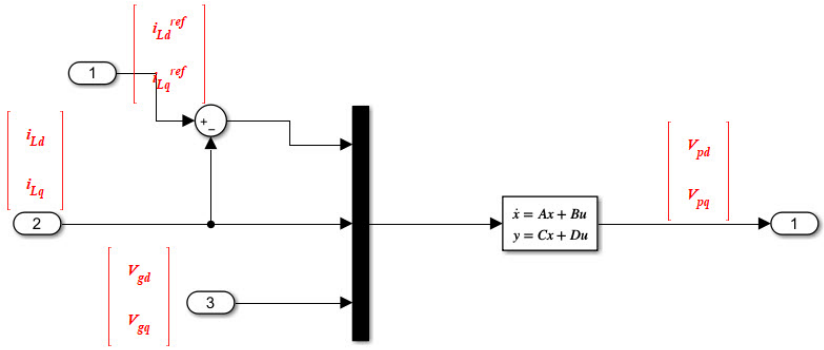

Figure 3: State Space Representation of Current PI Controller

Results

Reference Values for i_{Ld} and i_{Lq} are chosen 30,15,respectively. Proportional Gain and Integral Gain for PI controller are chosen $K_{p1} = K_{p2} = 10$ and $K_{I1} = K_{I2} = 3$.

After running simulation , current outputs of the system i_{ld} and i_{lq} are seen to follow the reference inputs, which is demonstrated in the following Figure.

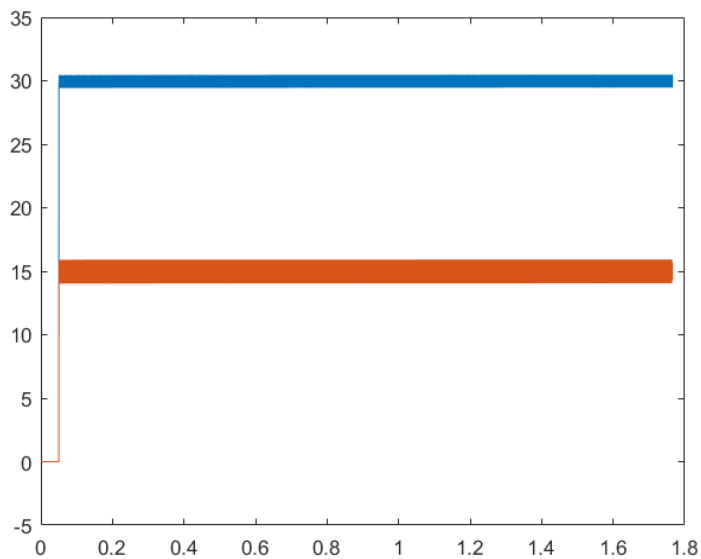

Figure 4: current outputs of the system

In the Fig 8, error(deviation output current of system from the reference current inputs) is shown

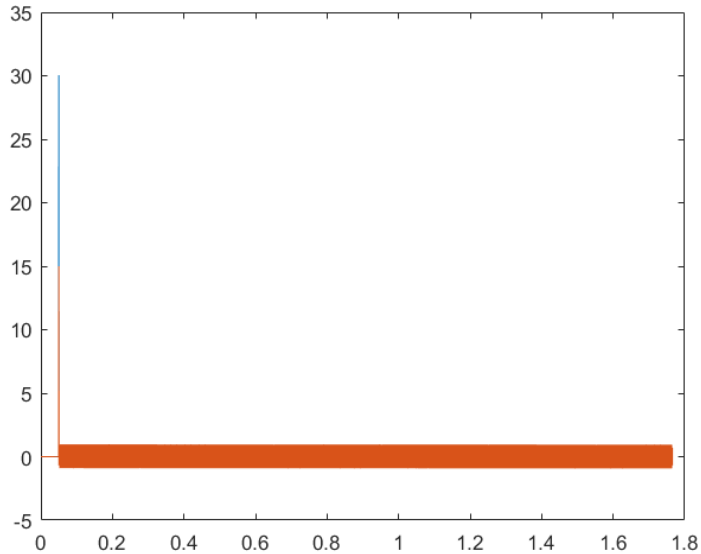

Figure 5: current error

Control Design Without Coupling

In this task , we don't consider DQ axis coupling which is illustrated in Fig 6.

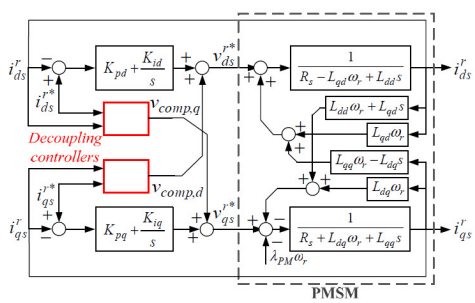

Figure 6: Block diagram of d-q current regulators with decoupling controllers.[2]

State Space PI Controller $\dot{x} = Ax + Bu$

Since we don't consider the coupling blocks , state space represantation for that is explain in the following.

$$\dot{x} = \begin{bmatrix} 0 & 0 \\ 0 & 0 \end{bmatrix} \cdot \begin{bmatrix} q_{Ld}^{err} \\ q_{Lq}^{err} \end{bmatrix} + \begin{bmatrix} 1 & 0 & 0 & 0 & 0 \\ 0 & 1 & 0 & 0 & 0 \end{bmatrix} \cdot \begin{bmatrix} i_{Ld}^{err} \\ i_{Lq}^{err} \\ i_{Ld} \\ i_{Lq} \\ V_{gd} \\ V_{gq} \end{bmatrix} \tag{8}$$

$$y = \begin{bmatrix} K_{I1} & 0 \\ 0 & K_{I2} \end{bmatrix} \cdot \begin{bmatrix} q_{Ld}^{err} \\ q_{Lq}^{err} \end{bmatrix} + \begin{bmatrix} K_{p1} & 0 & 0 & 0 & 1 & 0 \\ 0 & K_{p2} & 0 & 0 & 0 & 1 \end{bmatrix} \cdot \begin{bmatrix} i_{Ld}^{err} \\ i_{Lq}^{err} \\ i_{Ld} \\ i_{Lq} \\ V_{gd} \\ V_{gq} \end{bmatrix} \tag{9}$$

Results

Reference Values for i_{Ld} and i_{Lq} are chosen 30,15,respectively.(Same with Coupling Task) Proportional Gain and Integral Gain for PI controller are chosen $K_{p1} = K_{p2} = 10$ and $K_{I1} = K_{I2} = 3$.

After running simulation , current outputs of the system i_{ld} and i_{lq} are seen to follow the reference inputs, which is demonstrated in the following Figure.

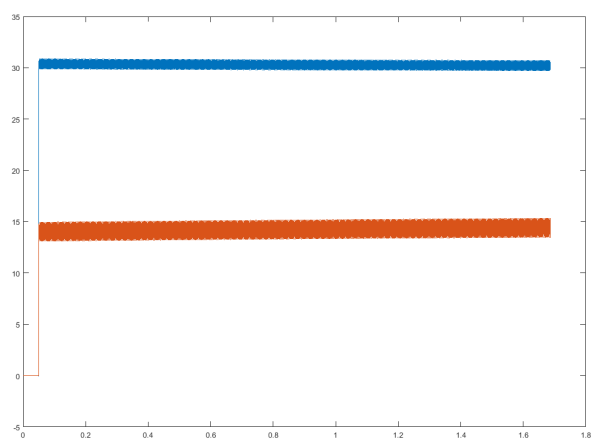

Figure 7: current outputs of the system

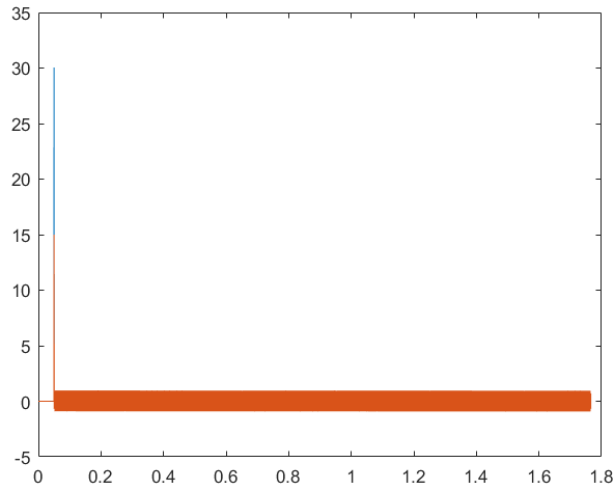

Figure 8: current error

Note : There is not significant difference between controller with/without coupling.

Root Locus

Root locus, a graphical presentation of the closed-loop poles as a system parameter is varied, is a powerful method of analysis and design for stability and transient response.[3] Let's find the whole system poles (controller + system) via state space.

System Equations are given

$$L_t \frac{\mathrm{d}i_{Ld}}{\mathrm{d}t} = V_{pd} - V_{gd} - R_t i_{Ld} + w \cdot L_t i_{Lq} \tag{10}$$

$$L_t \frac{\mathrm{d}i_{Lq}}{\mathrm{d}t} = V_{pq} - V_{gq} - R_t i_{Lq} + w \cdot L_t i_{Ld} \tag{11}$$

Substiting Eq.4 and Eq.5 into the Eq. 10 and Eq.11 , we can get

$$\frac{\mathrm{d}i_{Ld}}{\mathrm{d}t} = \frac{K_{p1}}{L_t} \cdot i_{Ld}^{ref} - \left(\frac{K_{p1} + R_t}{L_t}\right) \cdot i_{Ld} + \frac{K_{i1}}{L_t} \cdot q_{Ld} \tag{12}$$

$$\frac{\mathrm{d}i_{Lq}}{\mathrm{d}t} = \frac{K_{p2}}{L_t} \cdot i_{Lq}^{ref} - \left(\frac{K_{p2}+R_t}{L_t}\right) \cdot i_{Lq} + \frac{K_{i2}}{L_t} \cdot q_{Lq} \tag{13}$$

where $\dot{q}_{Ld} = i_{ld}^{ref} - i_{ld}$ and $\dot{q}_{Lq} = i_{lq}^{ref} - i_{lq}$

State Space Represantation of Eq.13 and Eq. can be indicated like

$$\begin{bmatrix} \dot{i}_{Ld} \\ \dot{i}_{Lq} \\ \dot{q}_{Ld} \\ \dot{q}_{Lq} \end{bmatrix} = \begin{bmatrix} -\left(\frac{K_{p1}+R_t}{L_t}\right) & 0 & \frac{K_{i1}}{Lt} & 0 \\ 0 & -\left(\frac{K_{p2}+R_t}{L_t}\right) & 0 & \frac{K_{i2}}{L_t} \\ -1 & 0 & 0 & 0 \\ 0 & -1 & 0 & 0 \end{bmatrix} \cdot \begin{bmatrix} i_{Ld} \\ i_{Lq} \\ q_{Ld} \\ q_{Lq} \end{bmatrix} + \begin{bmatrix} \frac{K_{p1}}{L_t} & 0 \\ 0 & \frac{K_{p2}}{L_t} \\ 1 & 0 \\ 0 & 1 \end{bmatrix} \cdot \begin{bmatrix} i_{ld}^{ref} \\ i_{lq}^{ref} \end{bmatrix} \tag{14}$$

$$\begin{bmatrix} i_{Ld} \\ i_{Lq} \end{bmatrix} = \begin{bmatrix} 1 & 0 & 0 & 0 \\ 0 & 1 & 0 & 0 \end{bmatrix} \cdot \begin{bmatrix} i_{Ld} \\ i_{Lq} \\ q_{Ld} \\ q_{Lq} \end{bmatrix} + \begin{bmatrix} 0 & 0 \\ 0 & 0 \end{bmatrix} \cdot \begin{bmatrix} i_{ld}^{ref} \\ i_{lq}^{ref} \end{bmatrix} \tag{15}$$

Let's draw the root locus graphics.For this purpose , Matlab can be used. Since matlab rlocus command works only for one changing variable which is proportinal K variable , we have to write our program due to the fact that we have 4 different variable , which are K_{p1} , K_{p2} , K_{i1} and K_{i2} If we consider $K_{p1} = K_{p2}$ and $K_{i1} = K_{i2}$, then we have 2 variables to chage it.So,we can simplify the root locus calculation Since we have 2 variables which are always changable , we must to write 2 nested for loop to draw the root locus.

```
for  j=-100:10:100
     Ki1=j;
     Ki2=j;
for  i=-100:10:100
   Kp1=i;
   Kp2=i;
A=[-(Kp1+rt)/Lt  0  Ki1/Lt  0  ;
     0   -(Kp2+rt)/Lt  0  Ki2/Lt  ;
     -1  0  0  0  ;
     0  -1  0  0];
B=[Kp1/Lt  0  ;  0  Kp2/Lt  ;  1  0  ;  0  1];
C=[1  0  0  0  ;  0  1  0  0  ];
```

```
D=zeros(2,2);
SS=ss(A,B,C,D);
TFs=tf(SS);
pzmap(TFs(1,1));
hold on;
end
end
```

In this Matlab Code , Parameters Ki and Kp are changed from -100 to 100. Note that to draw perfect root locus graphics , Parameters should be change from $-\infty$ to $+\infty$ Root Locus Graphics are shown in the Fig.

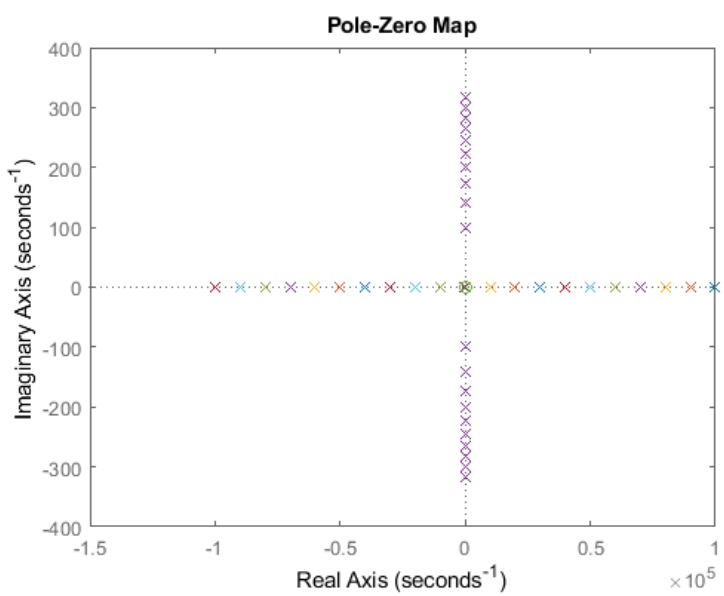

Figure 9: Root Locus $0 < K_{p1} = K_{p2} < 1000$ and $0 < K_{i1} = K_{i2} < 1000$

We can draw Root Locus analytically To find the transfer function , we will use following equation.

$$T(s) = \frac{Y(s)}{U(s)} = C \cdot (sI - A)^{-1} \cdot B + D \tag{16}$$

$$T(s) = \begin{bmatrix} 1 & 0 & 0 & 0 \\ 0 & 1 & 0 & 0 \end{bmatrix} \cdot \left(\begin{bmatrix} s & 0 & 0 & 0 \\ 0 & s & 0 & 0 \\ 0 & 0 & s & 0 \\ 0 & 0 & 0 & s \end{bmatrix} - \begin{bmatrix} -\left(\frac{K_{p1}+R_t}{L_t}\right) & 0 & \frac{K_{i1}}{Lt} & 0 \\ 0 & -\left(\frac{K_{p2}+R_t}{L_t}\right) & 0 & \frac{K_{i2}}{L_t} \\ -1 & 0 & 0 & 0 \\ 0 & -1 & 0 & 0 \end{bmatrix} \right) \cdot \begin{bmatrix} \frac{K_{p1}}{L_t} & 0 \\ 0 & \frac{K_{p2}}{L_t} \\ 1 & 0 \\ 0 & 1 \end{bmatrix} \tag{17}$$

$$T(s) = \begin{bmatrix} \frac{sK_{p1}+K_{i1}}{Ls^2+K_{p1}s+Rs+K_{i1}} & 0 \\ 0 & \frac{sK_{p2}+K_{i2}}{Ls^2+K_{p2}s+Rs+K_{i2}} \end{bmatrix} \tag{18}$$

$R = 10^{-2}$ and $L = 10^{-3}$ given.

$$T_1(s) = \frac{sK_{p1} + K_{i1}}{\frac{1}{1000}s^2 + K_{p1}s + \frac{1}{100}s + K_{i1}} \tag{19}$$

Poles of the Transfer Function;

$$s_1 = -500K_{p1} - 5 + 5\sqrt{10000Kp_1^2 - 40K_{i1} + 200K_{p1} + 1} \tag{20}$$

$$s_2 = -500K_{p1} - 5 - 5\sqrt{10000Kp_1^2 - 40K_{i1} + 200K_{p1} + 1} \tag{21}$$

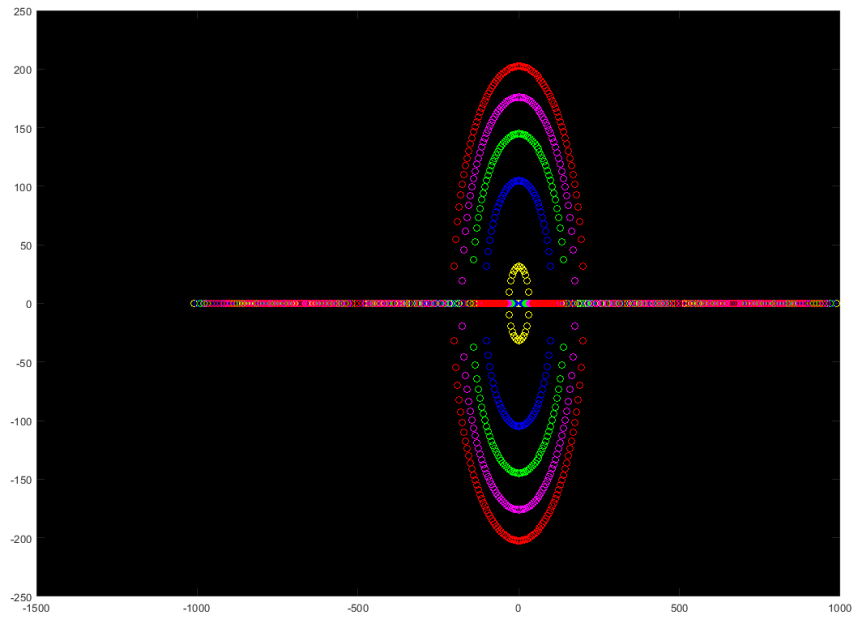

Figure 10: Root Locus where $-1 < K_{p1} < 1$ and $K_{i1} = 0 yellow$,$K_{i1} = 10 blue$, $K_{i1} = 20 green$, $K_{i1} = 30 magenta$,$K_{i1} = 40 red$

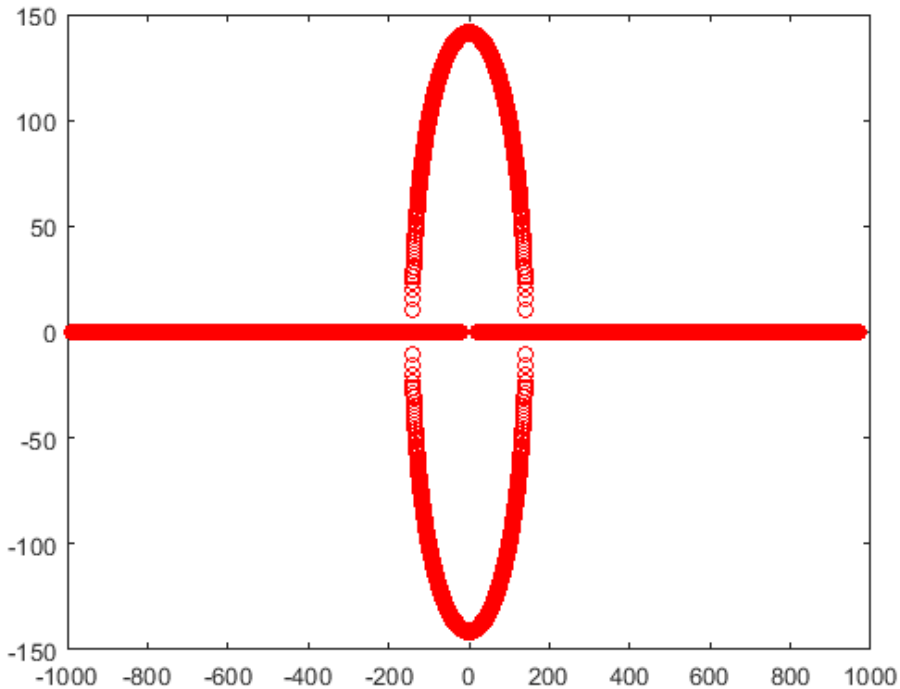

Figure 11: Root Locus where $-1 < K_{p1} < 1$ and $K_{i1} = 20$

PI Controller for P(active) and Q(reactive) Power

To control P(active) and Q(reactive) power , PI controller can be used and expressed in the Eq. 22 and Eq. 23

$$i_d^{ref} = K_{p3} \cdot \left(P_{ref} - P\right) + K_{i3} \cdot \int \left(P_{ref} - P\right) dt \tag{22}$$

$$i_q^{ref} = K_{p4} \cdot \left(Q_{ref} - Q\right) + K_{i4} \cdot \int \left(Q_{ref} - Q\right) dt \tag{23}$$

It can be shown as a block diagram in Fig 12 by putting before the PI current controller[4]

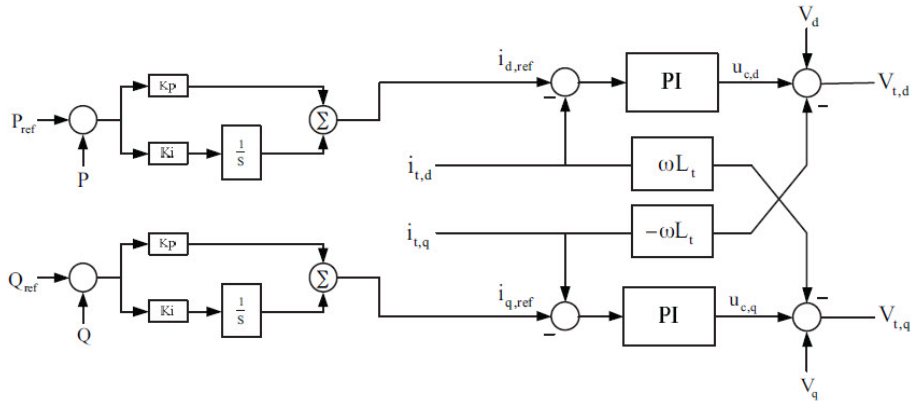

Figure 12: Structure diagram of the conventional power control scheme.

Results from obtaining PQ controller simulink are shown in the following figures.

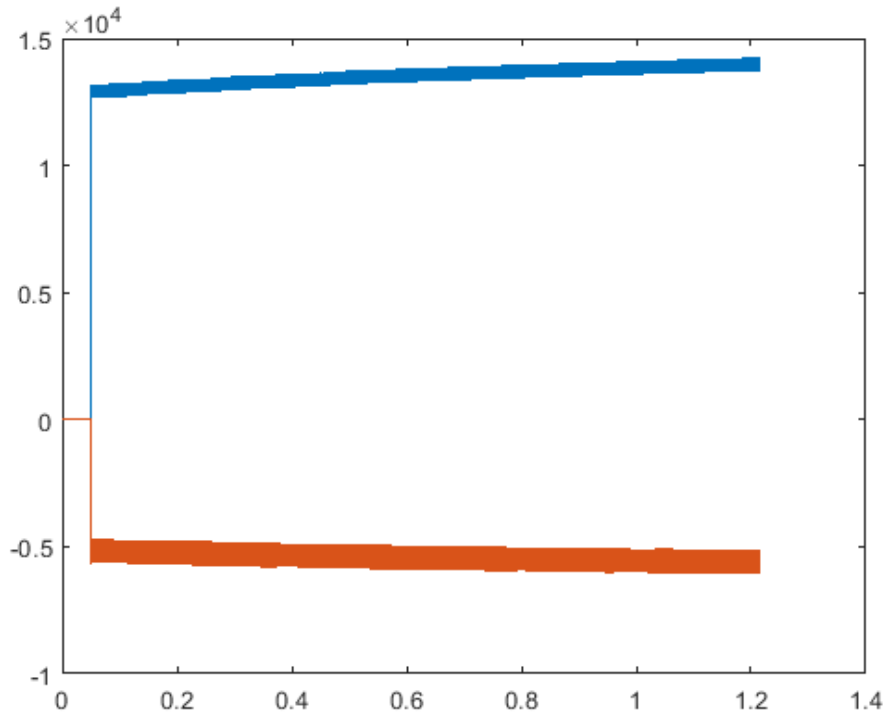

Figure 13: Measured P and Q. It reaches the P_{ref} and Q_{ref} which is calculated by using i_{Ldref} and i_{Lqref}

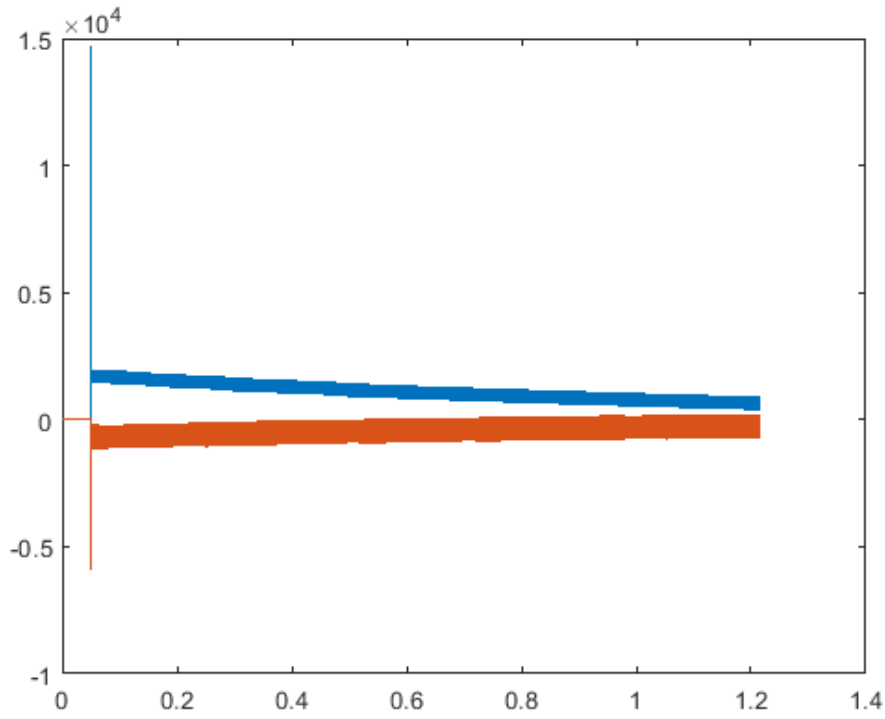

Figure 14: Error between reference P and Q and measured P and Q.

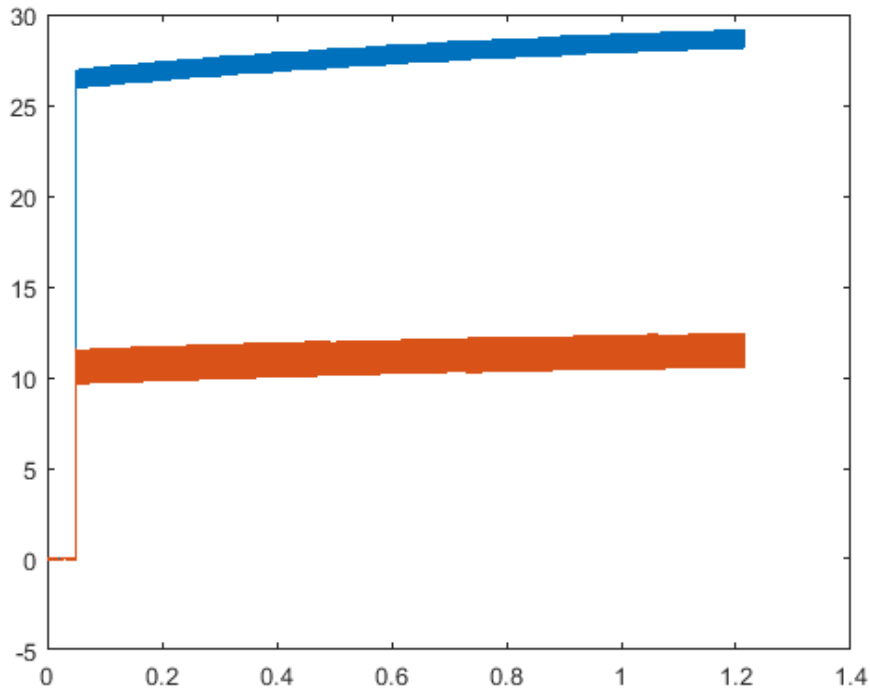

Figure 15: current i_{dq}

Root Locus

To draw Root Locus , we can express whole system(Power Controller and Current Controller and System) as a state space model.

And Power Equations[4]

$$P(t) = \frac{3}{2}\left(V_{gd} \cdot i_{Ld} + V_{gq} \cdot i_{Lq}\right) \tag{24}$$

$$Q(t) = \frac{3}{2}\left(-V_{gd} \cdot i_{Lq} + V_{gq} \cdot i_{Ld}\right) \tag{25}$$

Substitung Eq.22, Eq. 23 Eq.24 and Eq. 25 into the Eq. 13 and Eq. , following equations are obtained.

$$\dot{i_{Ld}} = \frac{K_{p1}K_{p3}P_{ref}(t)}{L_t} - \frac{3K_{p1}K_{p3}V_{gd}i_{Ld}}{2L_t} - \frac{3K_{p1}K_{p3}V_{gq}i_{Lq}}{2L_t} + \frac{K_{p1}K_{i3}\cdot\int P_{ref}(t)dt}{L_t} - \frac{3K_{p1}K_{i3}V_{gd}\cdot\int i_{Ld}dt}{2L_t} - \frac{3K_{p1}K_{i3}V_{gq}\int i_{Lq}dt}{2L_t} - \frac{K_{p1}i_{Ld}}{L_t} - \frac{Ri_{Ld}}{L_t} + \frac{K_{i1}q_d}{L_t} \quad (26)$$

$$\dot{i_{Lq}} = \frac{K_{p2}K_{p4}Q_{ref}(t)}{L_t} + \frac{3K_{p2}K_{p4}V_{gd}i_{Lq}}{2L_t} - \frac{K_{p2}K_{p4}V_{gq}i_{Ld}}{2L_t} + \frac{K_{p2}K_{i4}\int Q_{ref}(t)}{L_t} + \frac{3K_{p2}K_{i4}V_{gd}\int i_{Lq}dt}{2L_t} - \frac{3K_{p2}K_{i4}V_{gq}\int i_{Ld}dt}{2L_t} - \frac{K_{p2}i_{Lq}}{L_t} - \frac{Ri_{Lq}}{L_t} + \frac{K_{i2}q_q}{L_t} \quad (27)$$

States Variable ;

$x_1 = i_{Ld}$
$x_2 = i_{Lq}$
$x_3 = \int i_{Ld}dt$
$x_4 = \int i_{Lq}dt$
$x_5 = q_d$
$x_6 = q_q$

$$\dot{x_1} = \frac{K_{p1}K_{p3}P_{ref}(t)}{L_t} - \frac{3K_{p1}K_{p3}V_{gd}x_1}{2L_t} - \frac{3K_{p1}K_{p3}V_{gq}x_2}{2L_t} + \frac{K_{p1}K_{i3}\cdot\int P_{ref}(t)dt}{L_t} - \frac{3K_{p1}K_{i3}V_{gd}x_3}{2L_t} - \frac{3K_{p1}K_{i3}V_{gq}x_4}{2L_t} - \frac{K_{p1}x_1}{L_t} - \frac{Rx_1}{L_t} + \frac{K_{i1}x_5}{L_t} \quad (28)$$

$$\dot{x_2} = \frac{K_{p2}K_{p4}Q_{ref}(t)}{L_t} + \frac{3K_{p2}K_{p4}V_{gd}x_2}{2L_t} - \frac{3K_{p2}K_{p4}V_{gq}x_1}{2L_t} + \frac{K_{p2}K_{i4}\int Q_{ref}(t)}{L_t} + \frac{3K_{p2}K_{i4}V_{gd}x_4}{2L_t} - \frac{3K_{p2}K_{i4}V_{gq}x_3}{2L_t} - \frac{K_{p2}x_2}{L_t} - \frac{Rx_2}{L_t} + \frac{K_{i2}x_6}{L_t} \quad (29)$$

$$\dot{x_3} = x_1 \quad (30)$$

$$\dot{x_4} = x_1 \quad (31)$$

$$\dot{x_5} = K_{p3}P_{ref}(t) - \frac{3K_{p3}V_{gd}x_1}{2} - x_1 - \frac{3K_{p3}V_{gq}x_2}{2} + K_{i3}\int P_{ref}(t)dt + \frac{3K_{i3}V_{gd}x_3}{2} - \frac{3K_{i3}V_{gq}x_4}{2} \tag{32}$$

$$\dot{x_6} = K_{p4}Q_{ref}(t) + \frac{3K_{p4}V_{gd}x_2}{2} - x_2 - \frac{3K_{p4}V_{gq}x_1}{2} + K_{i4}\cdot\int Q_{ref}(t)dt + \frac{3K_{i4}V_{gd}x_4}{2} - \frac{3K_{i4}V_{gq}x_3}{2} \tag{33}$$

$$\begin{bmatrix} \dot{x_1} \\ \dot{x_2} \\ \dot{x_3} \\ \dot{x_4} \\ \dot{x_5} \\ \dot{x_6} \end{bmatrix} = \begin{bmatrix} \frac{-3K_{p1}K_{p3}V_{gd}}{2L_t} - \frac{K_{p1}}{L_t} - \frac{R}{L_t} & -\frac{3K_{p1}K_{p3}V_{gq}}{2L_t} & -\frac{3K_{p1}K_{i3}V_{gd}}{2L_t} & -\frac{3K_{p1}K_{i3}V_{gq}}{2L_t} & \frac{K_{i1}}{L_t} & 0 \\ -\frac{3K_{p2}K_{p4}V_{gq}}{2L_t} & \frac{3K_{p2}K_{p4}V_{gd}}{2L_t} - \frac{K_{p2}}{L_t} - \frac{R}{L_t} & \frac{3K_{p2}K_{i4}V_{gq}}{2L_t} & \frac{3K_{p2}K_{i4}V_{gd}}{2L_t} & 0 & \frac{K_{i2}}{L_t} \\ 1 & 0 & 0 & 0 & 0 & 0 \\ 0 & 1 & 0 & 0 & 0 & 0 \\ \frac{3K_{p3}V_{gd}}{2} - 1 & \frac{-3K_{p3}V_{gq}}{2} & \frac{3K_{i3}V_{gd}}{2} & \frac{K_{i3}V_{gq}}{2} & 0 & 0 \\ \frac{3K_{p4}V_{gq}}{2} & \frac{3K_{p4}V_{gd}}{2} - 1 & \frac{3K_{i4}V_{gq}}{2} & \frac{3K_{i4}V_{gd}}{2} & 0 & 0 \end{bmatrix} \cdot \begin{bmatrix} x_1 \\ x_2 \\ x_3 \\ x_4 \\ x_5 \\ x_6 \end{bmatrix} + \begin{bmatrix} \frac{K_{p1}K_{p3}}{L_t} & \frac{K_{p1}K_{i3}}{L_t} & 0 & 0 \\ 0 & 0 & \frac{K_{p2}K_{p4}}{L_t} & \frac{K_{p2}K_{i4}}{L_t} \\ 0 & 0 & 0 & 0 \\ 0 & 0 & 0 & 0 \\ K_{p3} & K_{i3} & 0 & 0 \\ 0 & 0 & K_{p4} & K_{i4} \end{bmatrix} \cdot \begin{bmatrix} P_{ref}(t) \\ \int P_{ref}(t)dt \\ Q_{ref}(t) \\ \int Q_{ref}(t)dt \end{bmatrix} \tag{34}$$

$$\begin{bmatrix} P(t) \\ Q(t) \end{bmatrix} = \begin{bmatrix} \frac{3V_{gd}}{2} & \frac{3V_{gq}}{2} & 0 & 0 & 0 & 0 \\ \frac{3V_{gq}}{2} & \frac{3V_{gd}}{2} & 0 & 0 & 0 & 0 \end{bmatrix} \cdot \begin{bmatrix} x_1 \\ x_2 \\ x_3 \\ x_4 \\ x_5 \\ x_6 \end{bmatrix} + \begin{bmatrix} 0 & 0 \\ 0 & 0 \\ 0 & 0 \\ 0 & 0 \end{bmatrix} \cdot \begin{bmatrix} P_{ref}(t) \\ \int P_{ref}(t)dt \\ Q_{ref}(t) \\ \int Q_{ref}(t)dt \end{bmatrix} \tag{35}$$

By using these matrices in Eq 34 and in Eq.35 , root locus can be drawn.

There are 8 variables to draw to root locus. 4 of them belongs to the *PI* controller for i_{Ld} and i_{Lq}.Others come from *PI* controller for *P*(real) and *Q*(reactive) power.

As a first assumption , $K_{p1} = K_{p2} = 1$ and $K_{i1} = K_{i2} = 1$ remain constant. Proportional gain and integral gain for control P(active) and Q(reactive) are equal each other $K_{p3} = K_{p4}$ and $K_{i3} = K_{i4}$.

```
Kp1=1;
Kp2=1;
Ki1=1;
Ki2=1;
Vgd=325;
Vgq=0;
for j=0:10:100
    Ki3=j;
    Ki4=j;
for i=0:100:100000
    Kp3=i;
    Kp4=i;
A1=[-3/2*(Kp1*Kp3*Vgd)/Lt-Kp1/Lt-rt/Lt , -3/2*(Kp1*Kp3*Vgq)/Lt , -3/2*
A2=[-3/2*(Kp2*Kp4*Vgq)/Lt, -3/2*(Kp2*Kp4*Vgd)/Lt-Kp2/Lt-rt/Lt, -3/2*(K
A3=[1,0,0,0,0,0];
A4=[0,1,0,0,0,0];
A5=[0.5*(3*Kp3*Vgd)-1 , -3*Kp3*Vgq/2 , 3*Ki3*Vgd/2 , 3*Ki3*Vgq/2 , 0 ,
A6=[3*Kp4*Vgq/2 , 0.5*(3*Kp4*Vgd-1) , -3*(Ki4*Vgq)/2 3*Ki4*Vgd/2 , 0,
A=[A1;A2;A3;A4;A5;A6];
B1=[(Kp1*Kp3)/Lt (Kp1*Ki3)/Lt 0 0];
B2=[0 0 (Kp2*Kp4)/Lt (Kp2*Ki4)/Lt];
B3=[0 0 0 0];
B4=[0 0 0 0];
B5=[Kp3, Ki3 , 0 0];
B6=[0 0 Kp4, Ki4];
B=[B1;B2;B3;B4;B5;B6];
C=[1.5*Vgd 1.5*Vgq 0 0 0 0; 1.5*Vgq -1.5*Vgd 0 0 0 0];
D=zeros(2,4);
SS=ss(A,B,C,D);
TFs=tf(SS);
pzmap(TFs(1,1));
hold on;
end
end
```

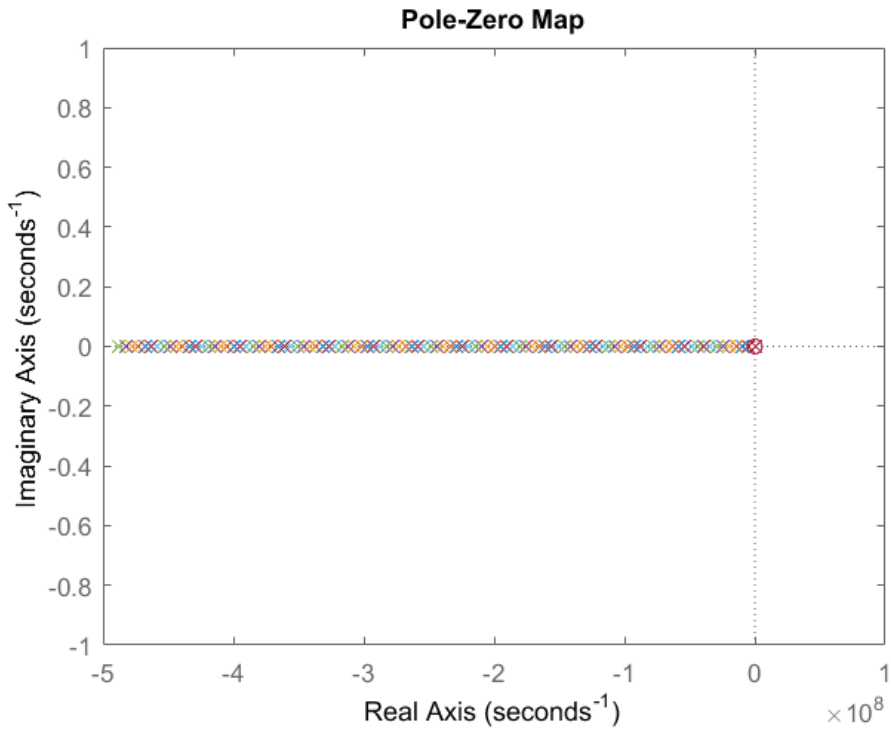

Figure 16: Root Locus Graphics of whole system. Gains for current controller remain constant $K_{p1} = K_{p2} = 1$ and $K_{i1} = K_{i2} = 1$ and $K_{p3} = K_{p4} = K_p$ and $K_{i3} = K_{i4} = K_i$ is changing.

If we consider whole parameters are changing independetly ,we have to write 8 nested for loop for each of them

```
clear all , clc
Ts=1e-6; % (s)
fo=50;  % grid frequency (Hz)
wo=2*pi*fo;
fsw=49.5e3; % switching frequency (Hz)
% fsw=20e3;
Lt=1e-3;  % L filter (H)
rt=0.01;  % internal resistance  (ohm)
Vgrid=325; %(peak phase-neutral voltage) (V)
```

```
Vdc=700; % DC link voltage (V)
Vgd=325;
Vgq=0;
for i1=0:10:10
    Kp1=i1;
    for i2=0:10:10
        Ki1=i2;
        for i3=0:10:10
            Kp2=i3;
            for i4=0:10:10
                Ki2=i4;
                for i5=0:10:10
                    Kp3=i5;
                    for i6=0:10:10
                        Ki3=i6;
                        for i7=0:10:10
                            Kp4=i7;
                            for i8=0:10:10
                                Ki4=i8;

A1=[-3/2*(Kp1*Kp3*Vgd)/Lt-Kp1/Lt-rt/Lt , -3/2*(Kp1*Kp3*Vgq)/Lt , -3/2*
A2=[-3/2*(Kp2*Kp4*Vgq)/Lt, -3/2*(Kp2*Kp4*Vgd)/Lt-Kp2/Lt-rt/Lt, -3/2*(K
A3=[1,0,0,0,0,0];
A4=[0,1,0,0,0,0];
A5=[0.5*(3*Kp3*Vgd)-1 , -3*Kp3*Vgq/2 , 3*Ki3*Vgd/2 , 3*Ki3*Vgq/2 , 0 ,
A6=[3*Kp4*Vgq/2 , 0.5*(3*Kp4*Vgd-1) , -3*(Ki4*Vgq)/2 3*Ki4*Vgd/2 , 0,
A=[A1;A2;A3;A4;A5;A6];
B1=[(Kp1*Kp3)/Lt (Kp1*Ki3)/Lt 0 0];
B2=[0 0 (Kp2*Kp4)/Lt (Kp2*Ki4)/Lt];
B3=[0 0 0 0];
B4=[0 0 0 0];
B5=[Kp3, Ki3 , 0 0];
B6=[0 0 Kp4, Ki4];
B=[B1;B2;B3;B4;B5;B6];
C=[1.5*Vgd 1.5*Vgq 0 0 0 0; 1.5*Vgq -1.5*Vgd 0 0 0 0];
D=zeros(2,4);
SS=ss(A,B,C,D);
TFs=tf(SS);
```

```
pzmap(TFs(1,1));
hold on;
                                        end
                                    end
                                end
                            end
                        end
                    end
                end
            end
```

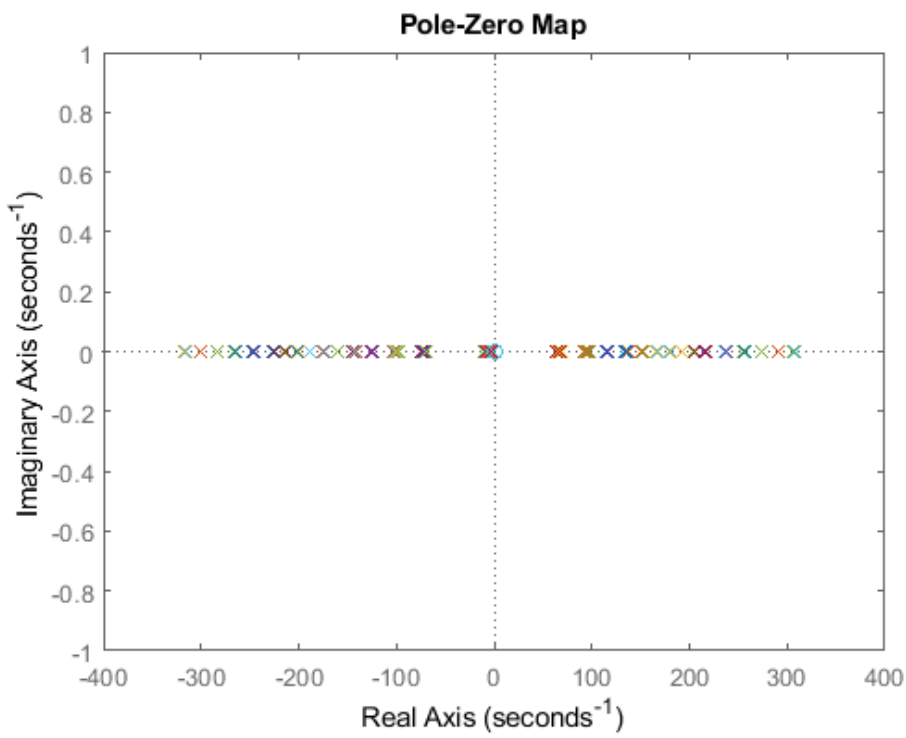

Figure 17: Root Locus Graphics of whole system. All Gains for current controller and power controller are changing $K_{p1}, K_{p2}, K_{p3}, K_{p4}$ and $K_{i1}, K_{i2}, K_{i3}, K_{i4}$.

Task 2 : OPTIMAL CONTROL

0.1 State Space Model of the System

$\dot{x(t)} = Ax(t) + Bu(t)$
$y(t) = Cx(t)$

where $x = \left[i_{Ld}, i_{Lq}, i_{load,d}, i_{load,q}, V_{gd}, V_{gq}\right]^T$, $u = \left[V_{pd} V_{pq}\right]^T$ and $y = \left[V_{gd} V_{gq}\right]^T$

$$\begin{bmatrix} \dot{i_{Ld}} \\ \dot{i_{Lq}} \\ \dot{i_{load,d}} \\ \dot{i_{load,q}} \\ \dot{V_{gd}} \dot{V_{gq}} \end{bmatrix} = \begin{bmatrix} \frac{-R_t}{L_t} & w_0 & 0 & 0 & -\frac{1}{L_t} & 0 \\ -w_0 & \frac{-R_t}{L_t} & 0 & 0 & 0 & -\frac{1}{L_t} \\ 0 & 0 & -\frac{R_{load}}{L_{load}} & w_0 & \frac{1}{L_{load}} & 0 \\ 0 & 0 & -w_0 & -\frac{R_{load}}{L_{load}} & 0 & \frac{1}{L_{load}} \\ \frac{1}{C_0} & 0 & 0 & -\frac{1}{C_0} & -\frac{1}{C_0 R_d} & w_0 \\ 0 & \frac{1}{C_0} & 0 & -\frac{1}{C_0} & -w_0 & -\frac{1}{C_0 R_d} \end{bmatrix} \cdot \begin{bmatrix} i_{Ld} \\ i_{Lq} \\ i_{load,d} \\ i_{load,q} \\ V_{gd} \\ V_{gq} \end{bmatrix} + \begin{bmatrix} \frac{1}{L_t} & 0 \\ 0 & \frac{1}{L_t} \\ 0 & 0 \\ 0 & 0 \\ 0 & 0 \\ 0 & 0 \end{bmatrix} \cdot \begin{bmatrix} V_{pq} \\ V_{pd} \end{bmatrix} \tag{36}$$

$$\begin{bmatrix} V_{gd} \\ V_{gq} \end{bmatrix} = \begin{bmatrix} 0 & 0 & 0 & 0 & 1 & 0 \\ 0 & 0 & 0 & 0 & 0 & 1 \end{bmatrix} \cdot \begin{bmatrix} i_{Ld} \\ i_{Lq} \\ i_{load,d} \\ i_{load,q} \\ V_{gd} \\ V_{gq} \end{bmatrix} + \begin{bmatrix} 0 & 0 \\ 0 & 0 \end{bmatrix} \cdot \begin{bmatrix} V_{pd} \\ V_{pq} \end{bmatrix} \tag{37}$$

0.2 Observer Design

First, we need to choose the observer gain L. Since we want the dynamics of the observer to be much faster than the system itself, we need to place the poles at least five times farther to the left than the dominant poles of the system..[**?**]

For that reason ,we have to find poles of the system. In other words, eigenvalues of the system matrix A

In Matlab ,we can calculate eigenvalues of matrix A or poles of the system.

$$eig(A) = 10^5 \cdot \begin{bmatrix} -0.0018+0.0479i \\ -0.0018-0.0479i \\ -0.0018+0.0416i \\ -0.0018-0.0416i \\ -3.3313+0.0031i \\ -3.3313-0.0031i \end{bmatrix} \tag{38}$$

As we can see from Eq. 38 ,our observer poles at least must be located more than $-15x10^5$. Hence, observer poles are chosen in the following.

$$\begin{bmatrix} op1 \\ op2 \\ op3 \\ op4 \\ op5 \\ op6 \end{bmatrix} = \begin{bmatrix} -15x10^5 \\ -16x10^5 \\ -17x10^5 \\ -18x10^5 \\ -19x10^5 \\ -20x10^5 \end{bmatrix} \tag{39}$$

To find observer gain L, we can use Matlab command
$L = place(A', C', [op1, op2, op3, op4, op5, op6])';$
Then we obtain observer gain matrix L

$$L = 10^8 \cdot \begin{bmatrix} 7.8930 & -0.6174 \\ -0.7472 & 8.0158 \\ 4.1555 & -0.4033 \\ -0.4889 & 4.2378 \\ 0.0490 & -0.0014 \\ -0.0016 & 0.0493 \end{bmatrix} \tag{40}$$

To find the states of the system , we need to design Observer.Since we cannot measure states except for V_{gq} and V_{gd}.

Observer design as a block diagram is shown in the Fig. 18

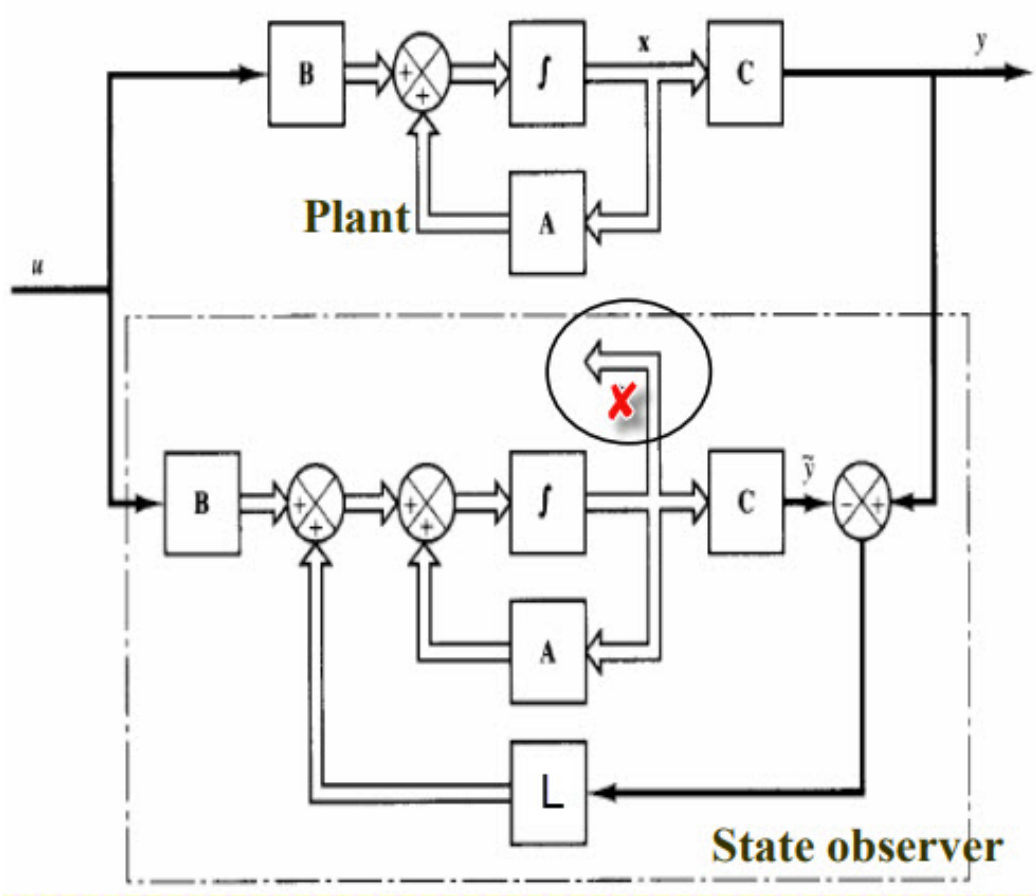

Figure 18: Observer Block Diagrams

In Matlab/Simulink , Observer blocks are designed like this.

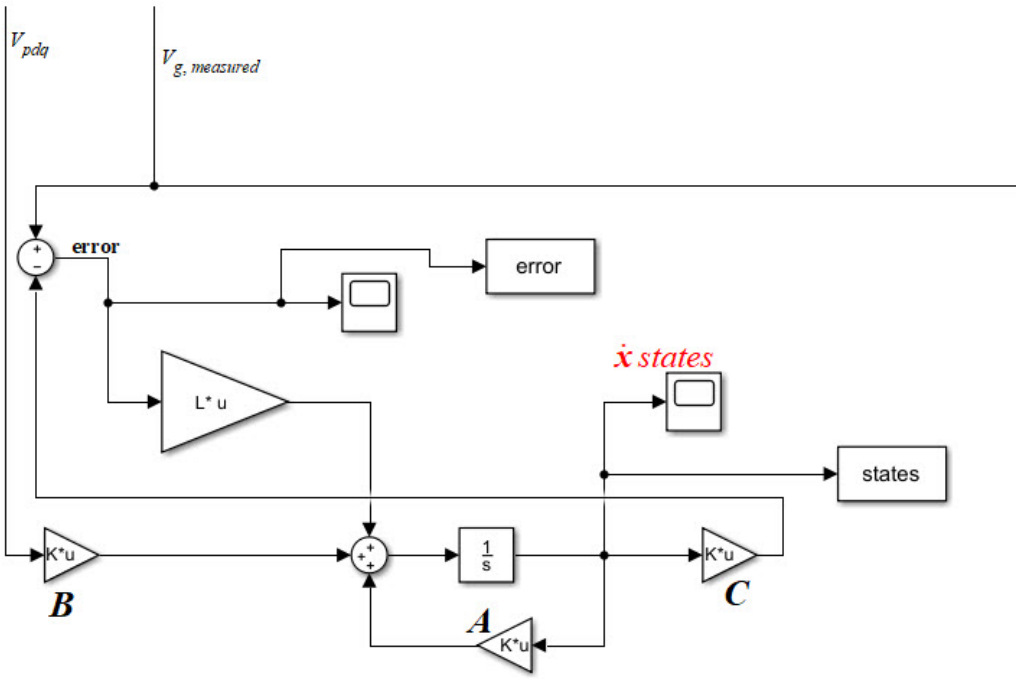

Figure 19: Observer Block Diagrams

Results of the STATES

0.3 Design Kalman Filter

Plant Model
$\dot{x}(t) = Ax(t) + B_u u(t) + B_w w(t)$
$m(t) = C_m x(t) + v(t)$
Kalman Filter Equation
$\hat{\dot{x}}(t) = A\hat{x}(t) + B_u u(t) + G(t)\left[m(t) - C_m \hat{x}(t)\right]$

Since only voltage measurment is corrupted by Noise , we can assume as $w(t) = 0$

To design a Kalman Filter , we can use special block known as Kalman Filter. This is shown in the Fig. 25.

To find Kalman Gain $G(t)$, we will use Ricatti Equation. Matlab command of Steady State Ricatti Equation is given.[2]

[2]https://www.mathworks.com/help/control/ref/care.html

$[X,L,G] = care(A,B,Q,R,S,E)$
$A^T XE + E^t XA - \left(E^T XB + S\right) R^{-1} \left(B^T XE + S^T\right) + Q = 0$
For our purpose ,we can write command in the following.

```
[X1,L1,G1] = care(A,C',zeros(size(A)),Sv)
```

$A\Sigma_e(t) + \Sigma_e(t)A^T + B_w S_w B_w^T - \Sigma_e(t)C_m^T S_v^{-1} C_m \Sigma_e(t) = 0$
where $S_w = 0$

Result of Solving steady state Ricatti Equation is given in the following matrix which is Kalman Gain Matrix

$$G(t) = 10^4 \cdot \begin{bmatrix} -0.0223 & 0.0257 \\ 0.0257 & -0.0296 \\ -1.8883 & 2.1743 \\ 1.8990 & -2.1866 \\ 0.3770 & -0.4340 \\ -0.4340 & 0.4998 \end{bmatrix} \tag{41}$$

Because we haven't designed any controller yet ,we assumed that output of the system is constant and always $[150,50]$ by switching upside to be able to estimate states which is shown in the Fig.20.Otherwise , states will consists of zeros.

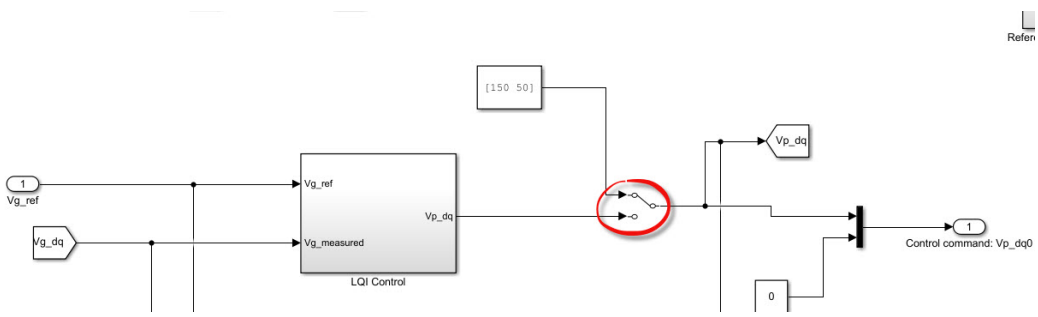

Figure 20: Kalman Pamaters

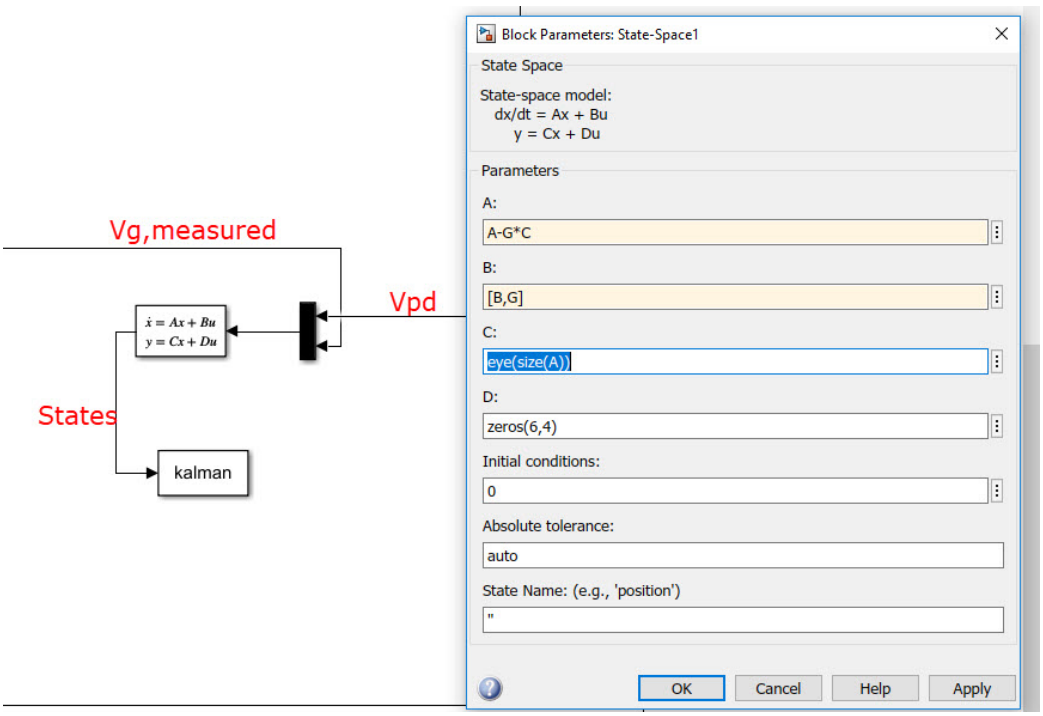

Figure 21: Kalman Pamaters

Estimated states and real states as well as error are illustrated in the following graphics.

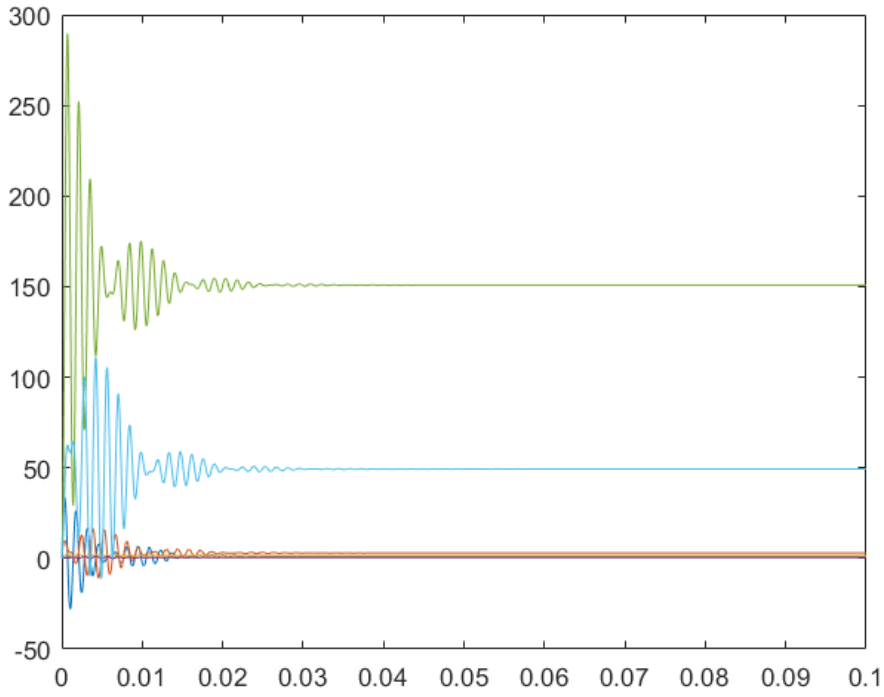

Figure 22: States obtained from Kalman Filter

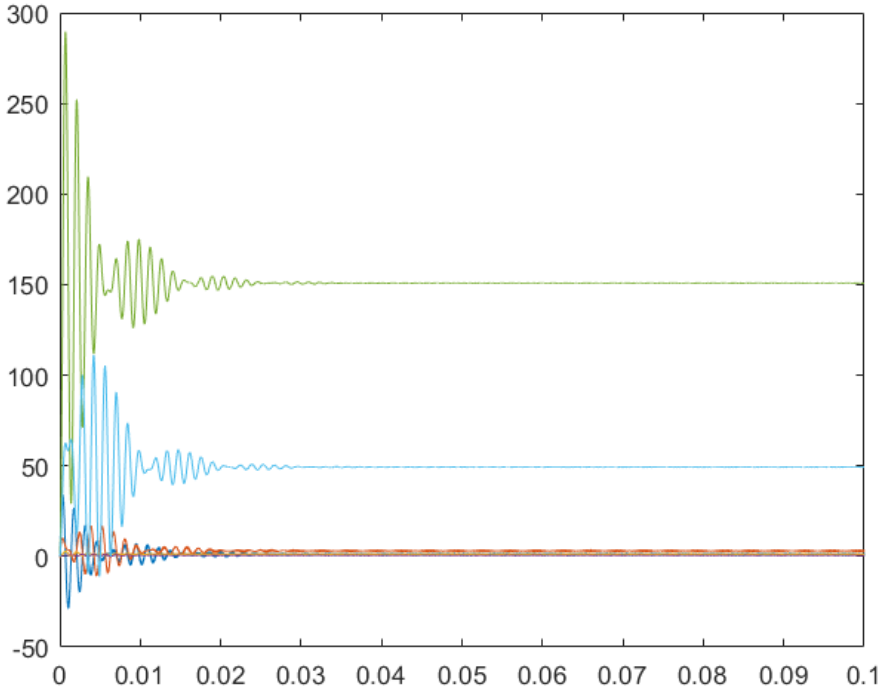

Figure 23: Real State Values

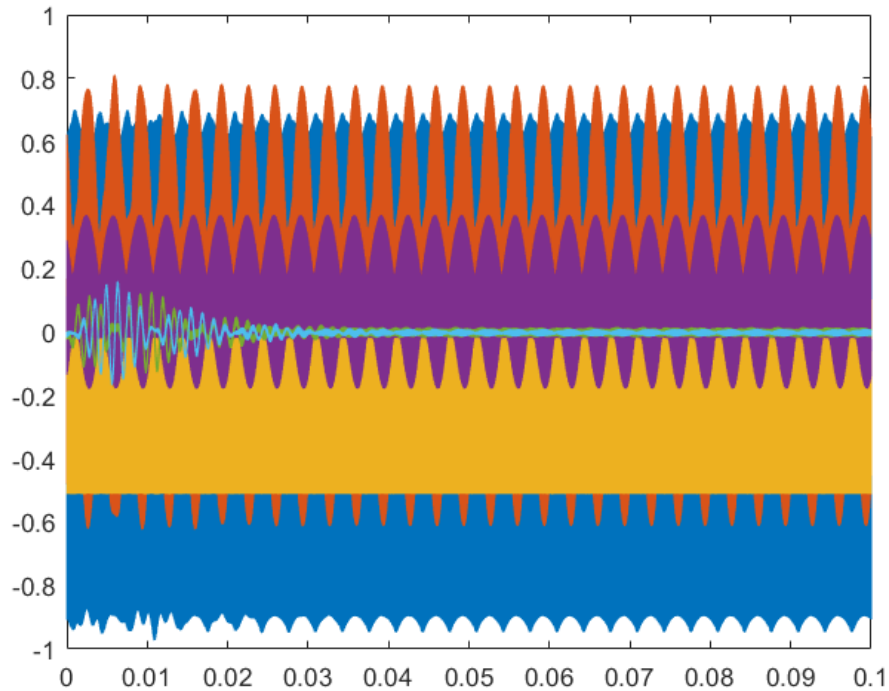

Figure 24: Error between Real and Estimate State Variables

Fig. 24 shows that error is very large in transient condition and approaches to zero in the steady state condition.That is because we use Steady State Ricatti Equation to find the Kalman Gain $G(t)$

Another Method for Kalman Filter

In Matlab Simulink , there is a specific block for Kalman Filter.To estimate the state variables , it can be also used.

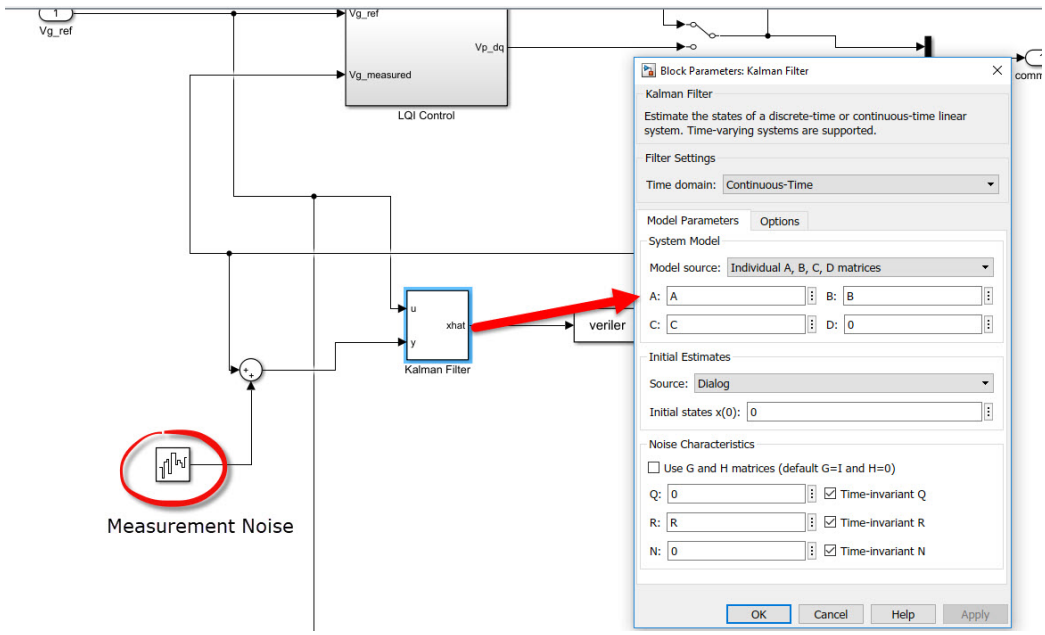

Figure 25: Special Kalman Filter from Simulink Library

In the follwing Figures , it can be seen that both Estimated State values and Real state values

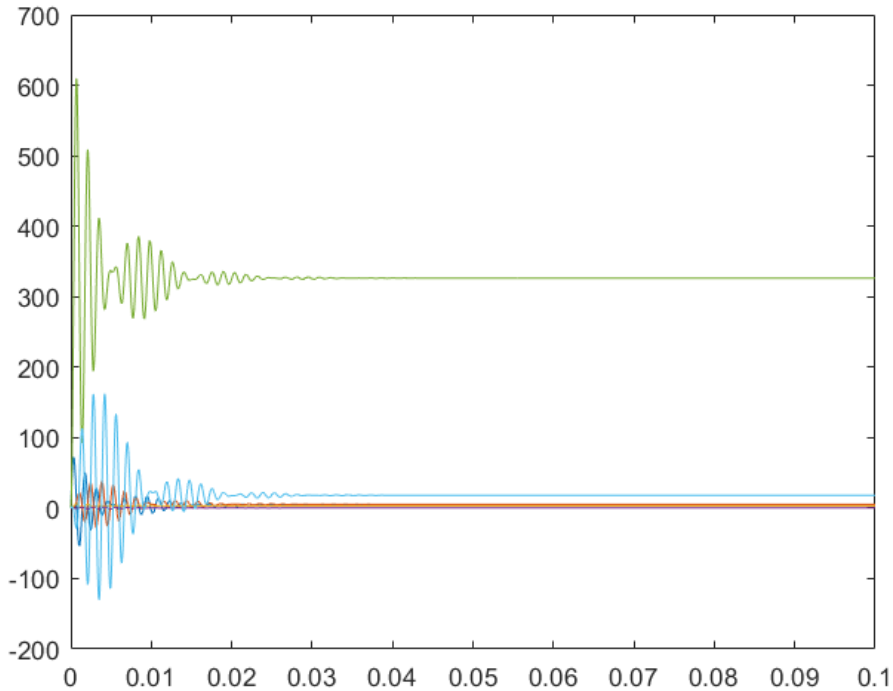

Figure 26: Estimated States

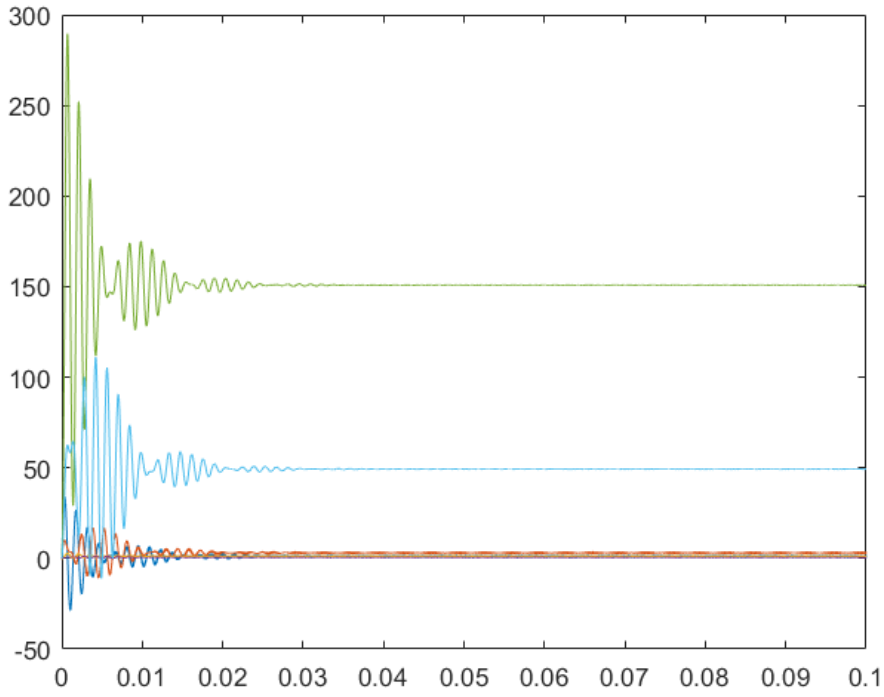

Figure 27: Real State Values

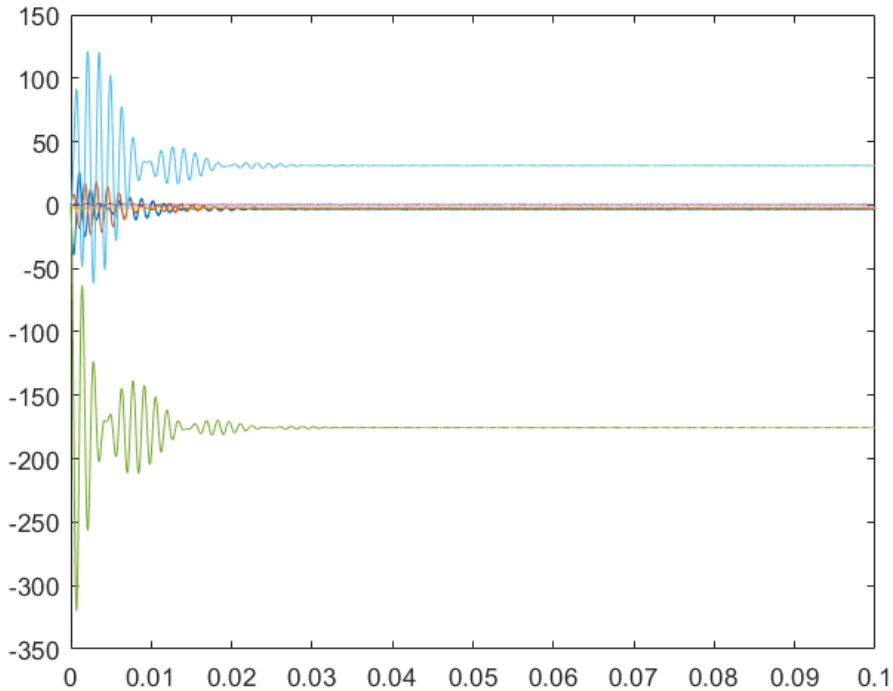

Figure 28: Error between estimated and real state values by using special Kalman Filter from Matlab/Simulink library.

Linear Quadratic Gaussian (LQG)

Cost function

$$J = \int_0^{t_f=\infty} x^T(t)Qx(t_f) + u^T(t)Ru(t)dt$$

For cost function , let's define positive definite Q and R matrices.

$$Q = \begin{bmatrix} 0.1000 & 0 & 0 & 0 & 0 & 0 & 0 & 0 \\ 0 & 0.1000 & 0 & 0 & 0 & 0 & 0 & 0 \\ 0 & 0 & 0.1000 & 0 & 0 & 0 & 0 & 0 \\ 0 & 0 & 0 & 0.1000 & 0 & 0 & 0 & 0 \\ 0 & 0 & 0 & 0 & 0.1000 & 0 & 0 & 0 \\ 0 & 0 & 0 & 0 & 0 & 0.1000 & 0 & 0 \\ 0 & 0 & 0 & 0 & 0 & 0 & 1.0000 & 0 \\ 0 & 0 & 0 & 0 & 0 & 0 & 0 & 1.0000 \end{bmatrix} \tag{42}$$

$$R = \begin{bmatrix} 1 & 0 \\ 0 & 2 \end{bmatrix} \tag{43}$$

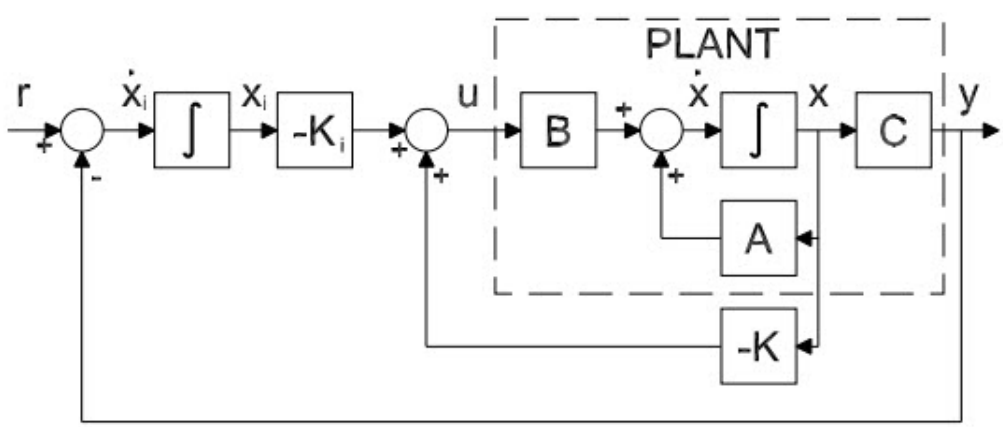

Figure 29: Linear-Quadratic-Integral control.

To find the optimal gain matrix K ,we can use the matlab commend.

```
nx = 6;      %Number of states
ny = 2;      %Number of outputs
Q = blkdiag(0.1*eye(nx),eye(ny));
R=[1 0 ; 0 2];
```

```
Klqr=lqi(ss(A,B,C,D),Q,R)
```

After executing the code , we can get K_{lqr}

$$K_{lqr} = \begin{bmatrix} 0.0659 & -0.0824 & 6.1684 & -5.4420 & -1.1152 & 1.3886 & 0.2726 & -0.9621 \\ -0.0371 & 0.0438 & -2.7210 & 3.6201 & 0.6261 & -0.7406 & -0.6803 & -0.1928 \end{bmatrix} \tag{44}$$

If $R = \begin{bmatrix} 1 & 0 \\ 0 & 2 \end{bmatrix}$ and $Q = \begin{bmatrix} 1 & 0 & 0 & 0 & 0 & 0 & 0 & 0 \\ 0 & 1 & 0 & 0 & 0 & 0 & 0 & 0 \\ 0 & 0 & 1 & 0 & 0 & 0 & 0 & 0 \\ 0 & 0 & 0 & 1 & 0 & 0 & 0 & 0 \\ 0 & 0 & 0 & 0 & 1 & 0 & 0 & 0 \\ 0 & 0 & 0 & 0 & 0 & 1 & 0 & 0 \\ 0 & 0 & 0 & 0 & 0 & 0 & 1 & 0 \\ 0 & 0 & 0 & 0 & 0 & 0 & 0 & 1 \end{bmatrix}$ are selected , output voltage is shown in the following figure

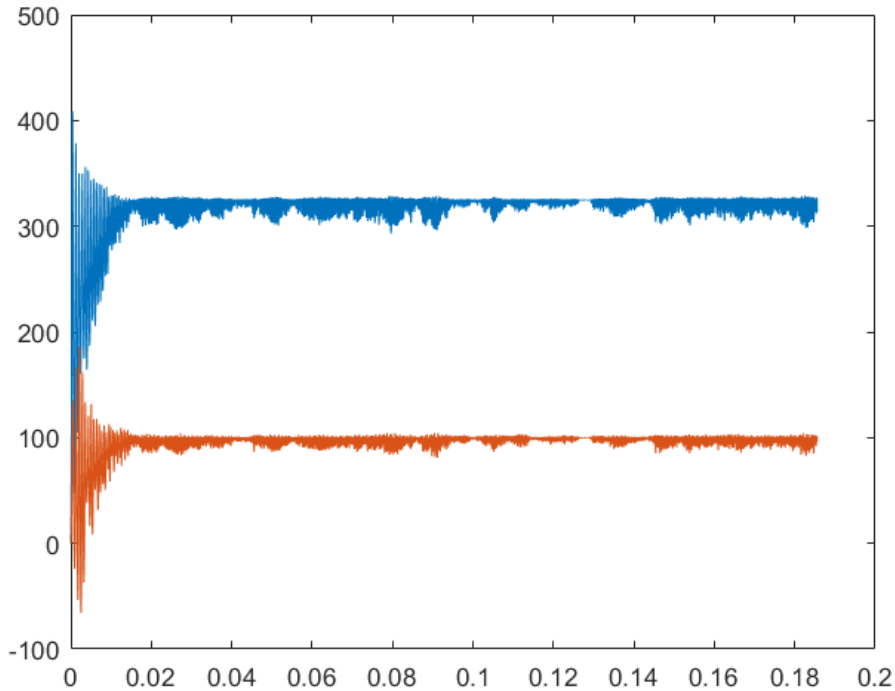

Figure 30: output voltage where

If $R = \begin{bmatrix} 10 & 0 \\ 0 & 20 \end{bmatrix}$ and $Q = \begin{bmatrix} 1 & 0 & 0 & 0 & 0 & 0 & 0 & 0 \\ 0 & 1 & 0 & 0 & 0 & 0 & 0 & 0 \\ 0 & 0 & 1 & 0 & 0 & 0 & 0 & 0 \\ 0 & 0 & 0 & 1 & 0 & 0 & 0 & 0 \\ 0 & 0 & 0 & 0 & 1 & 0 & 0 & 0 \\ 0 & 0 & 0 & 0 & 0 & 1 & 0 & 0 \\ 0 & 0 & 0 & 0 & 0 & 0 & 1 & 0 \\ 0 & 0 & 0 & 0 & 0 & 0 & 0 & 1 \end{bmatrix}$ are selected , output voltage is shown in the following figure

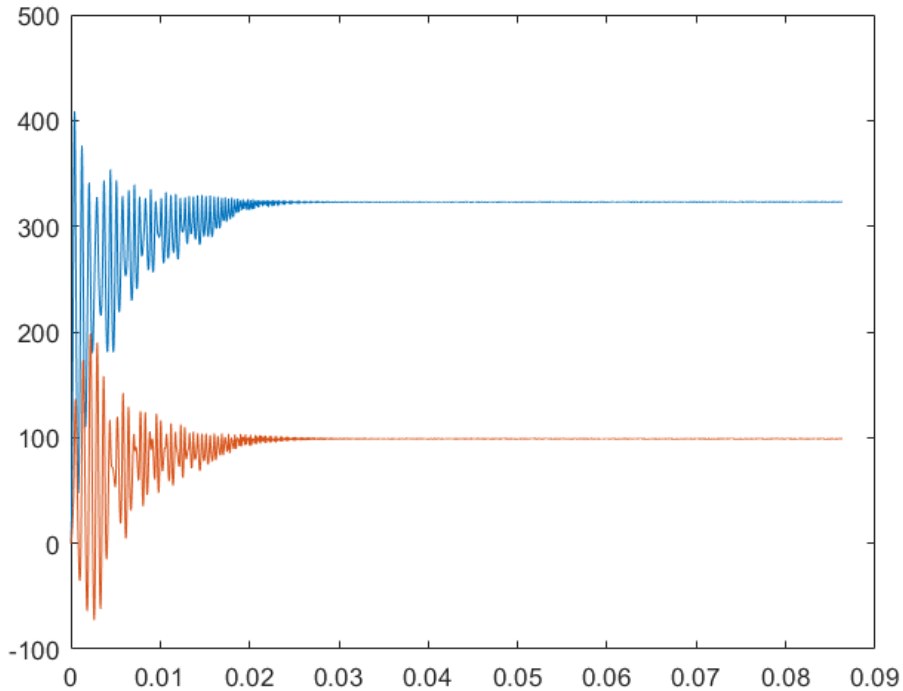

Figure 31: output voltage where

If $R = \begin{bmatrix} 100 & 0 \\ 0 & 200 \end{bmatrix}$ and $Q = \begin{bmatrix} 10 & 0 & 0 & 0 & 0 & 0 & 0 & 0 \\ 0 & 10 & 0 & 0 & 0 & 0 & 0 & 0 \\ 0 & 0 & 10 & 0 & 0 & 0 & 0 & 0 \\ 0 & 0 & 0 & 10 & 0 & 0 & 0 & 0 \\ 0 & 0 & 0 & 0 & 10 & 0 & 0 & 0 \\ 0 & 0 & 0 & 0 & 0 & 10 & 0 & 0 \\ 0 & 0 & 0 & 0 & 0 & 0 & 10 & 0 \\ 0 & 0 & 0 & 0 & 0 & 0 & 0 & 10 \end{bmatrix}$ are selected

, output voltage is shown in the following figure

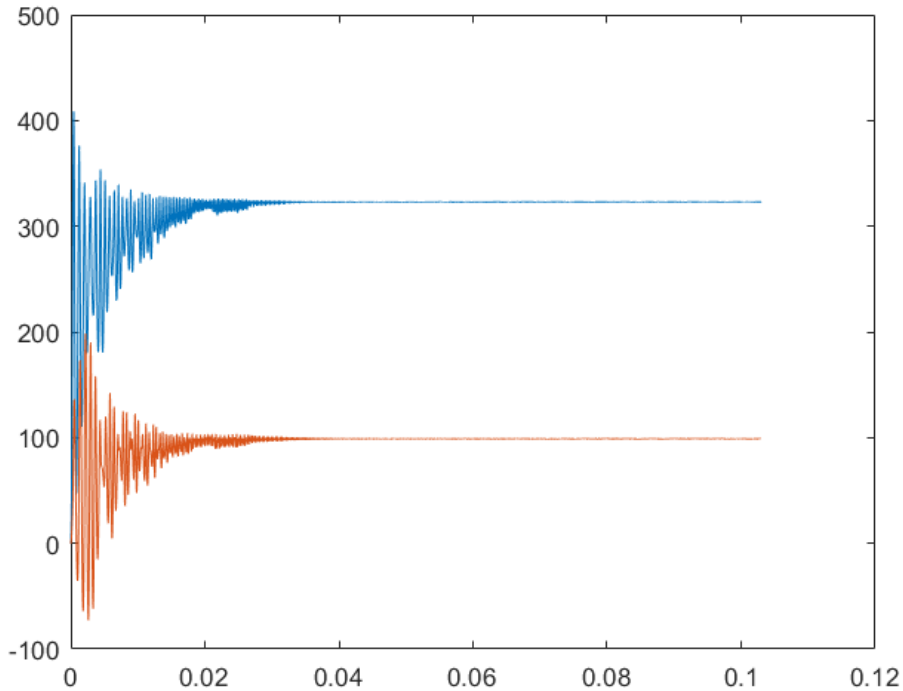

Figure 32: output voltage where

If large step change in load is applying at 0.08s , outputvoltage ,states are shown int the following graphics.

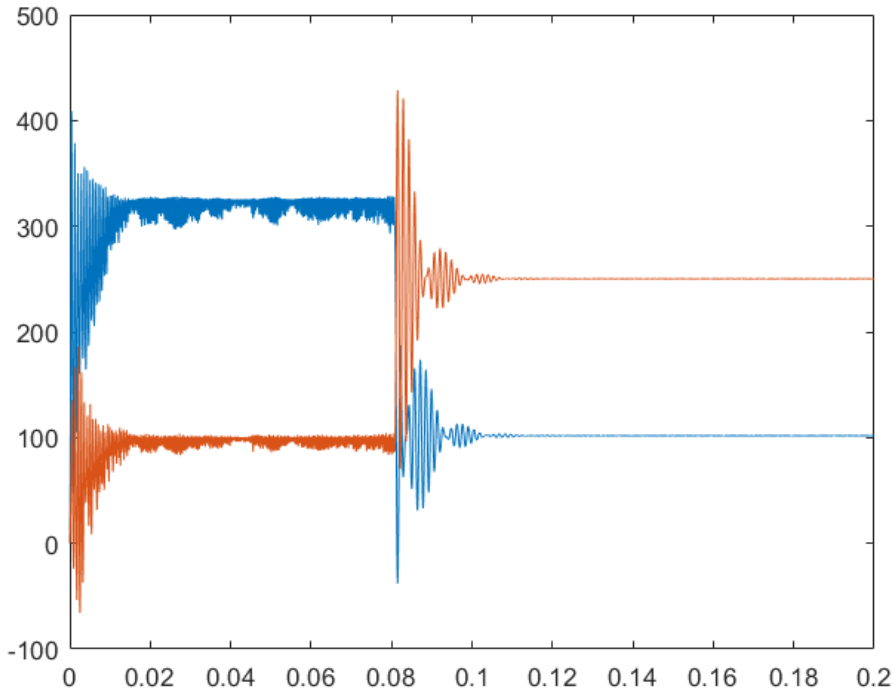

Figure 33: output voltage where large step change occour at 0.08s

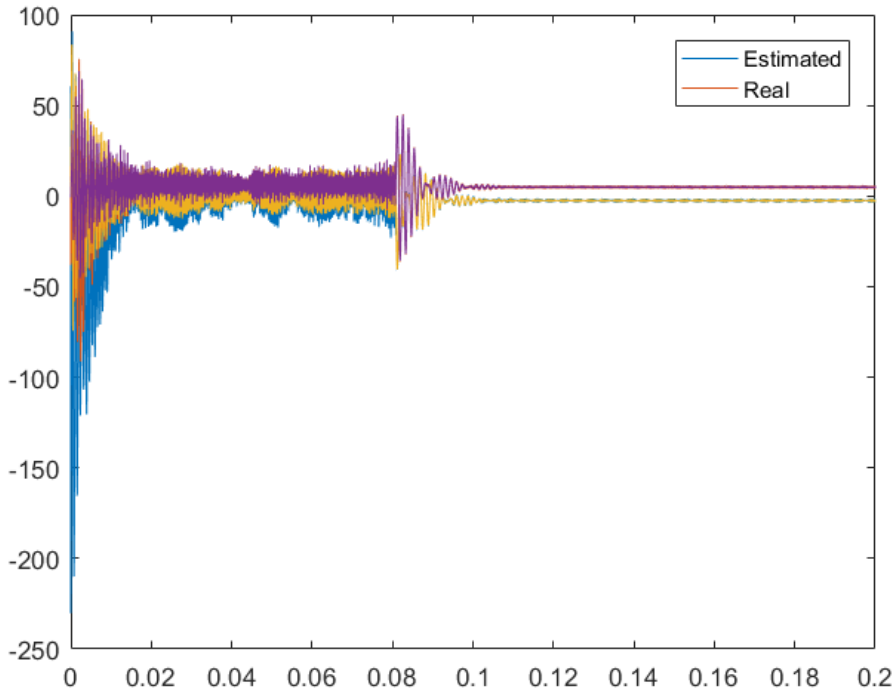

Figure 34: Real and Estimated i_{Ldq} states where large step change occour at 0.08s

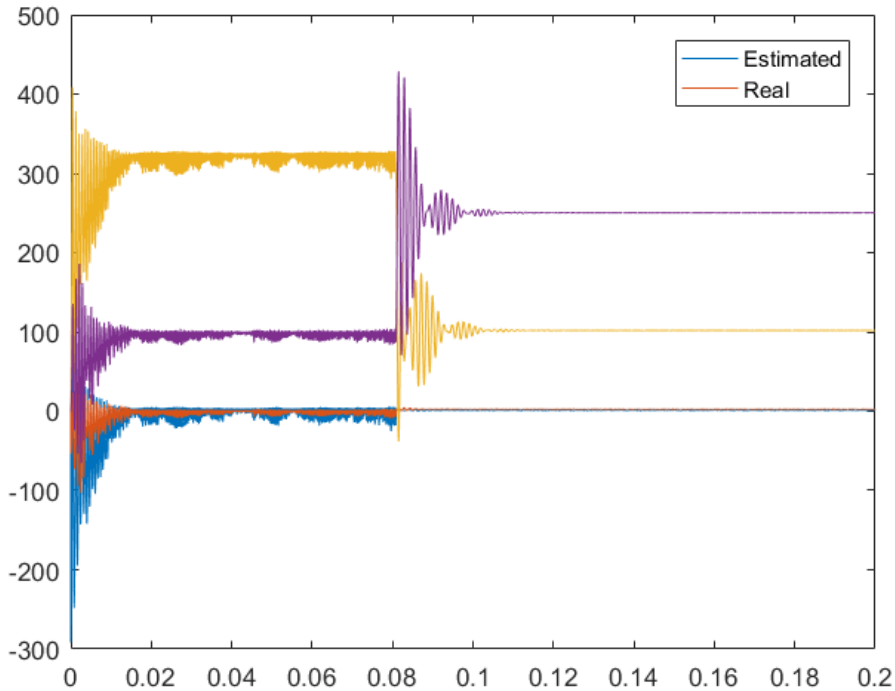

Figure 35: Real and Estimated V_{gdq} states where large step change occour at 0.08s

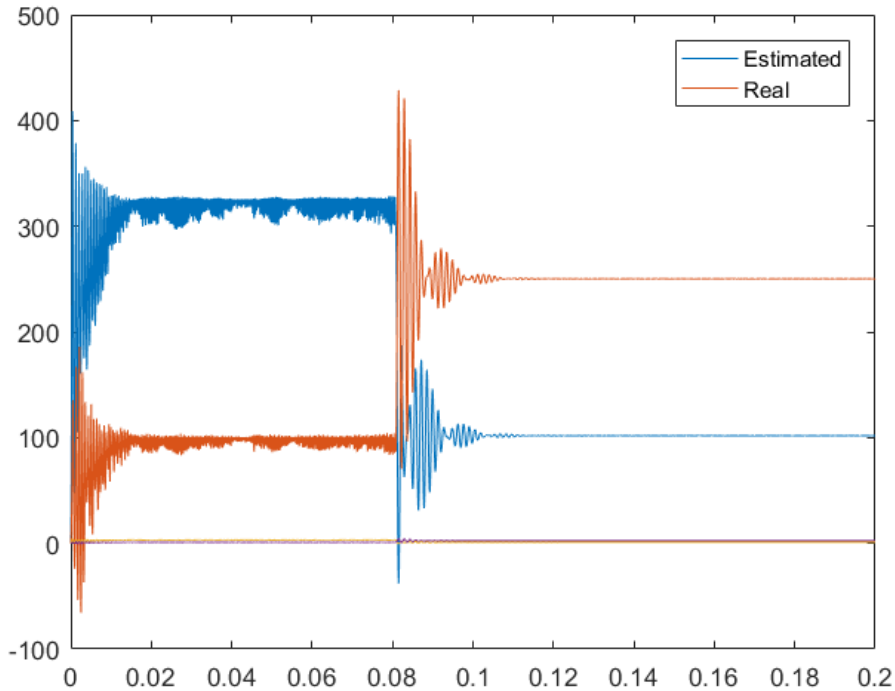

Figure 36: Real and Estimated i_{Loaddq} states where large step change occour at 0.08s

If large step change in input is applying at 0.08s , outputvoltage ,states are shown int the following graphics.

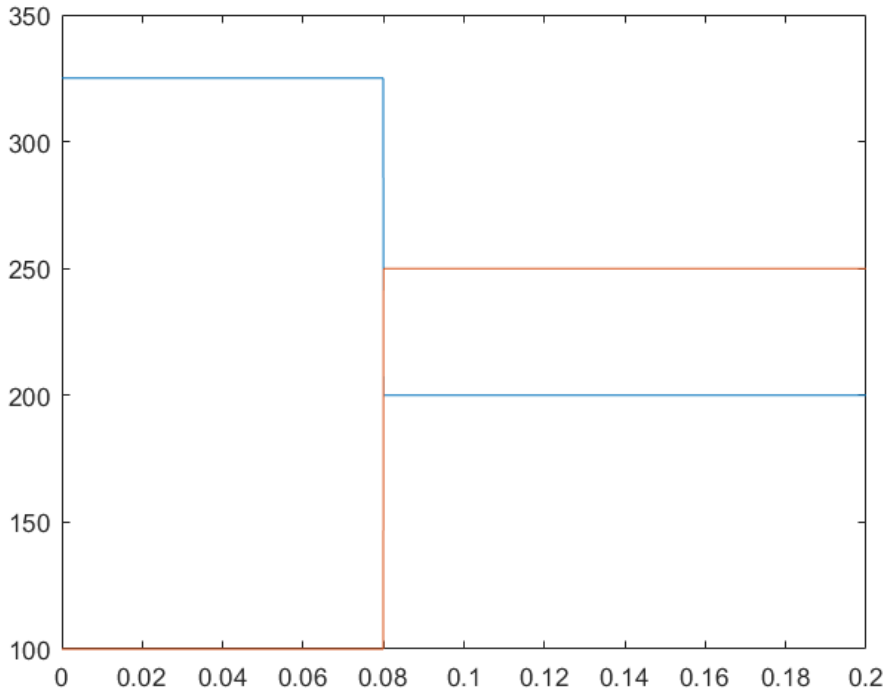

Figure 37: Large input change occour at 0.08s

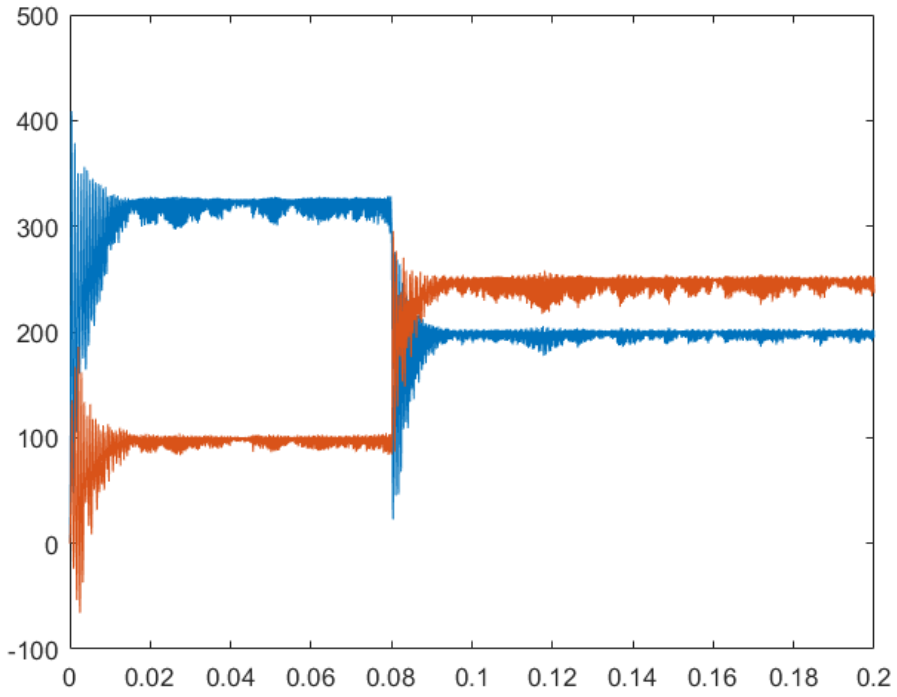

Figure 38: Output Voltage where large step reference change occours at 0.08s

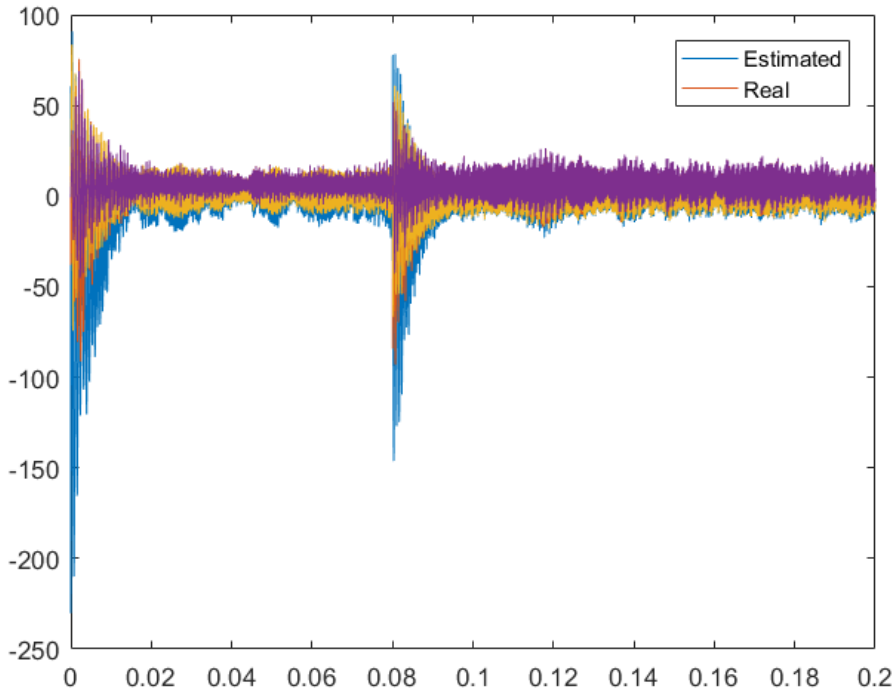

Figure 39: Real and Estimated i_{Ldq} states where large step reference change occours at 0.08s

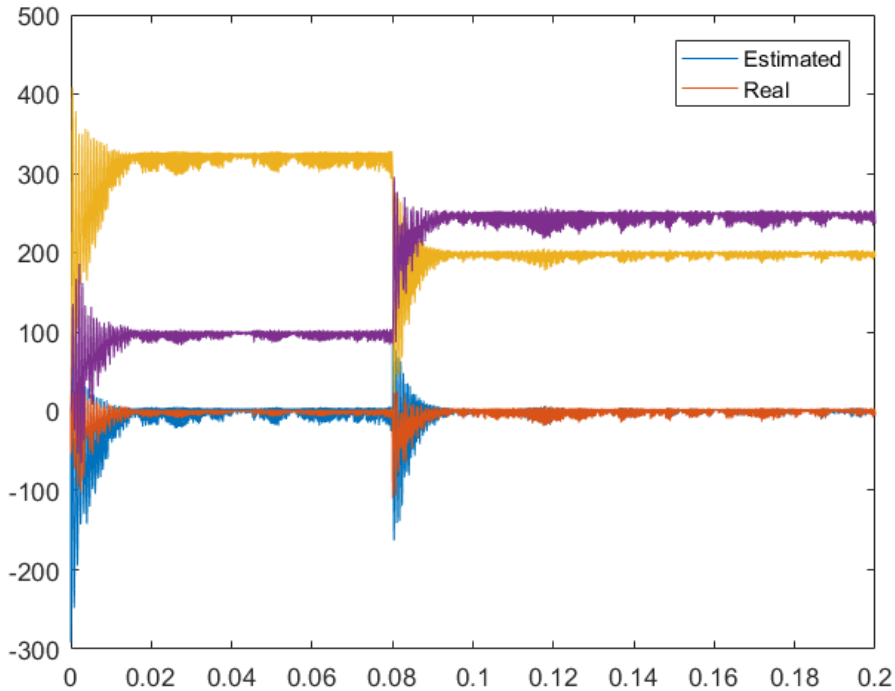

Figure 40: Real and Estimated V_{gdq} states where large step reference change occours at 0.08s

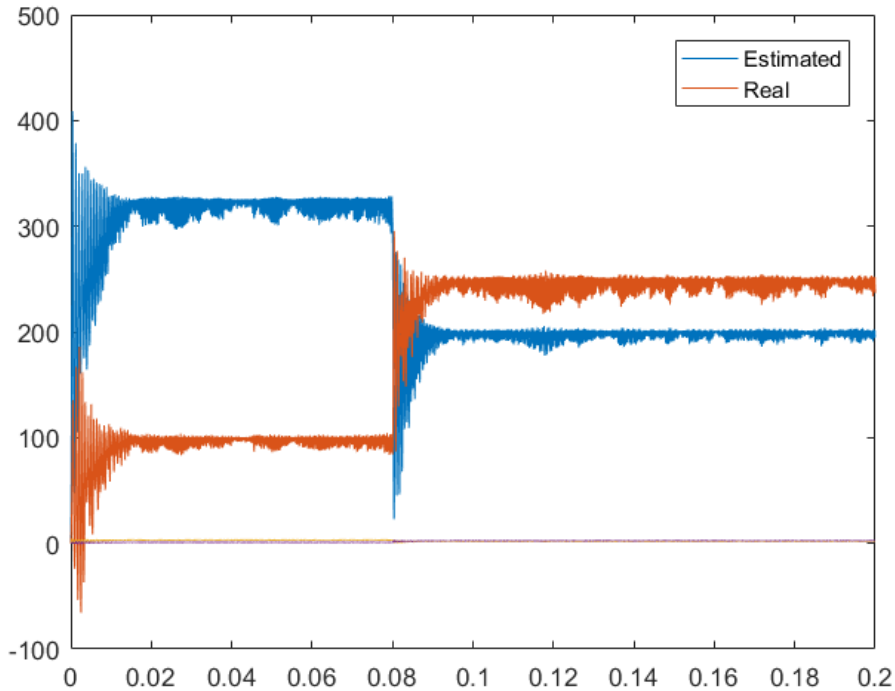

Figure 41: Real and Estimated i_{Loaddq} states where large step reference change occours at 0.08s

References

[1] Natalia Kroutikova, Carlos A Hernandez-Aramburo, and Timothy C Green. State-space model of grid-connected inverters under current control mode. *IET Electric Power Applications*, 1(3):329–338, 2007.

[2] Kahyun Lee and Jung-Ik Ha. Dynamic decoupling control method for pmsm drive with cross-coupling inductances. In *Applied Power Electronics Conference and Exposition (APEC), 2017 IEEE*, pages 563–569. IEEE, 2017.

[3] Norman S Nise. *CONTROL SYSTEMS ENGINEERING, (With CD)*. John Wiley & Sons, 2007.

[4] Hesam Rahbarimagham, Erfan Maali Amiri, Behrooz Vahidi, Gevorg Babamalek Gharehpetian, and Mehrdad Abedi. Superior decoupled control of active and reactive power for three-phase voltage source converters. *Turkish Journal of Electrical Engineering & Computer Sciences*, 23(4):1025–1039, 2015.