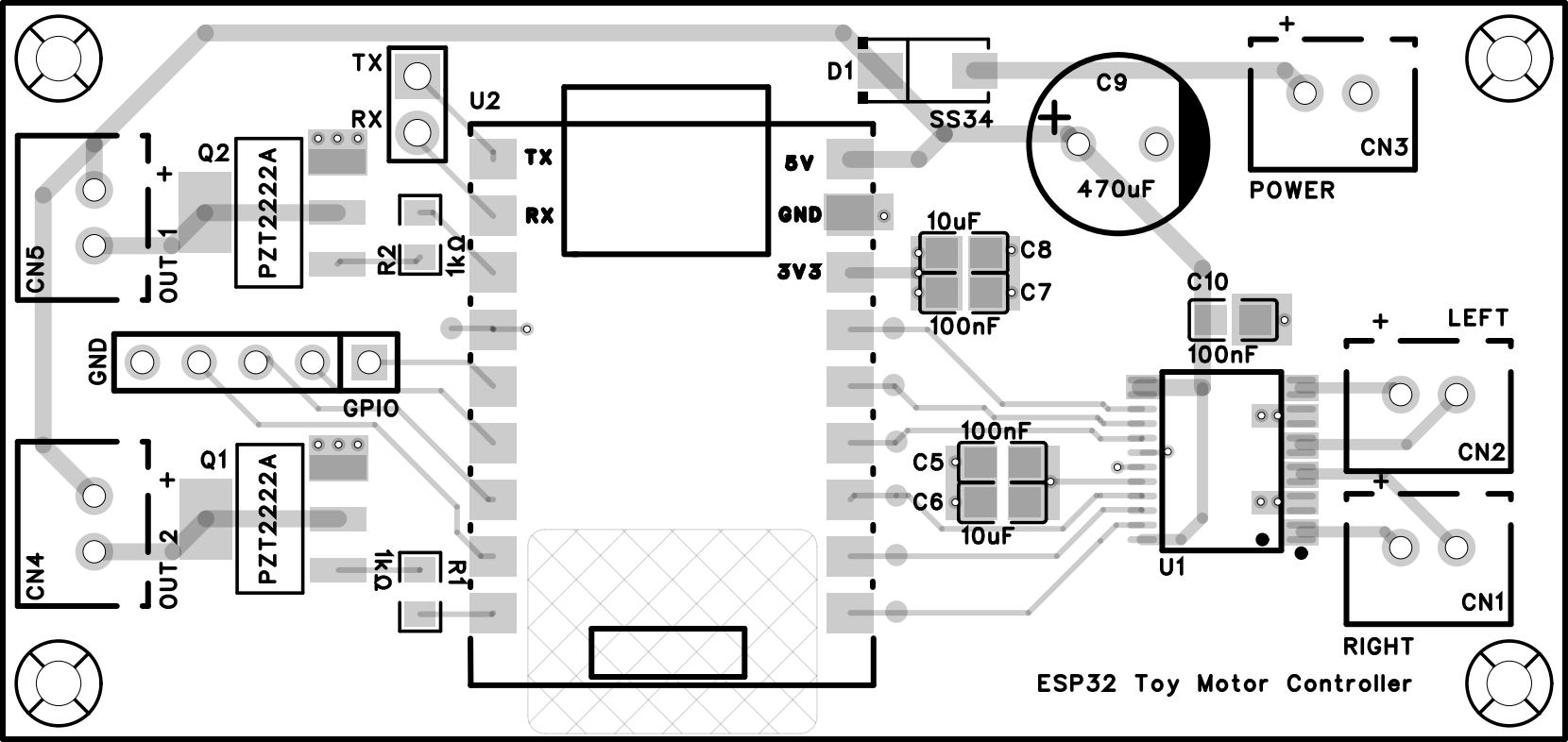
TX
RX
U2
TX
RX
5V
GND
3V3
D1
SS34
C9
470uF
CN3
POWER
Q2
PZT2222A
CN5
OUT 1
R2
1kΩ
10uF
C8
C7
100nF
C10
100nF
LEFT
GND
GPIO
Q1
PZT2222A
CN4
OUT 2
R1
1kΩ
100nF
C5
C6
10uF
U1
CN2
CN1
RIGHT
ESP32 Toy Motor Controller

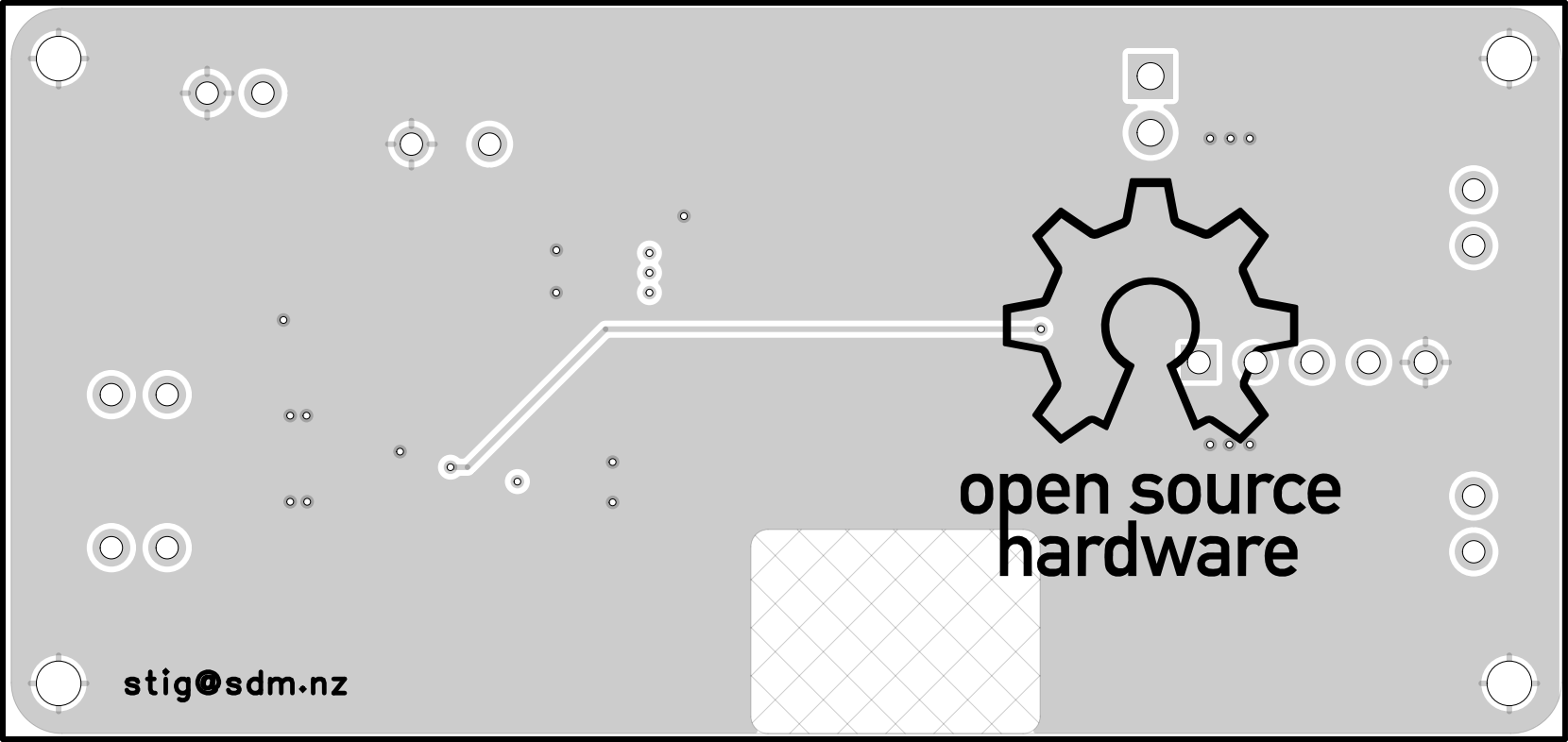
open source
hardware
stig@sdm.nz