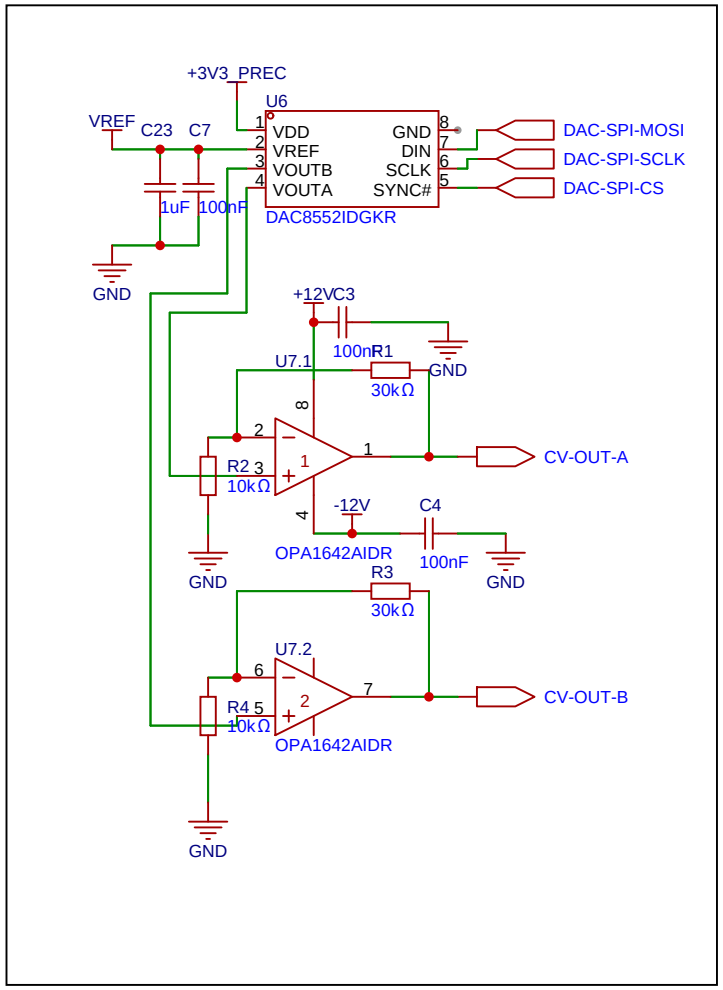

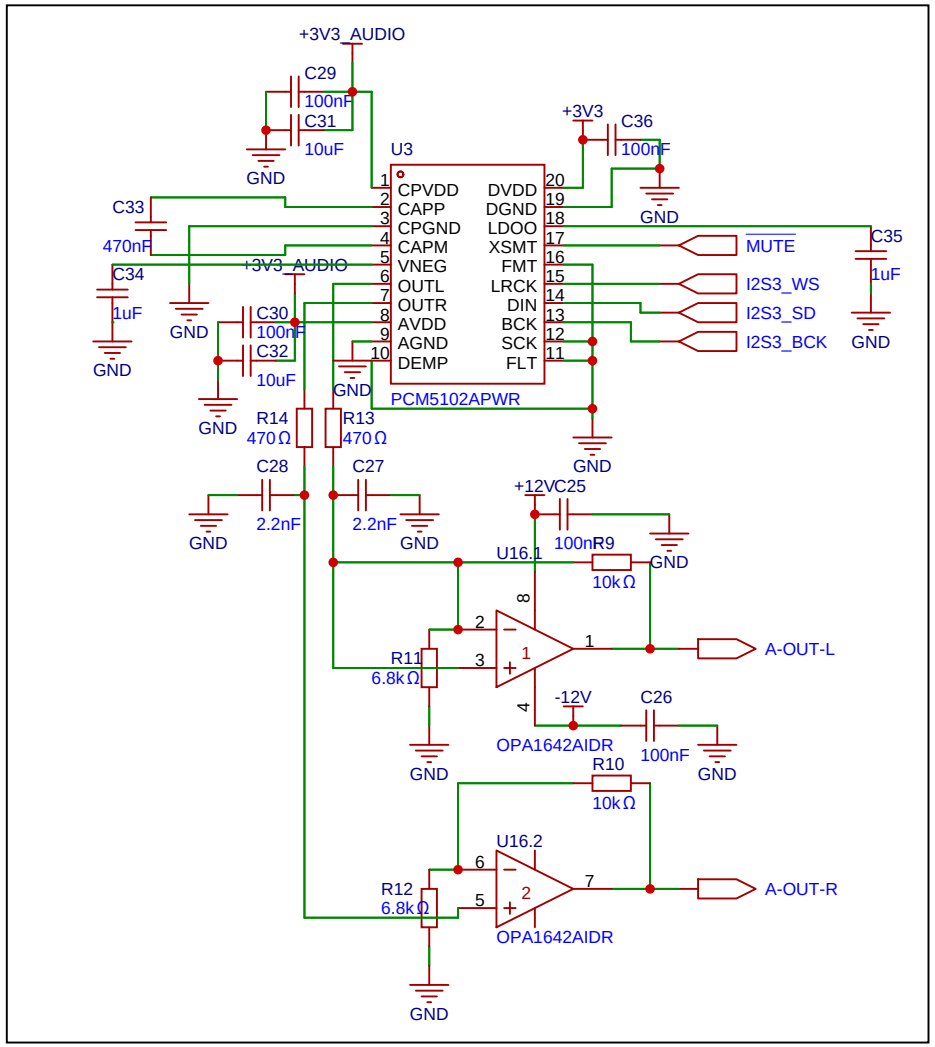

Schematic	tachyon	Create at	2026-04-07
		Update at	2026-04-11
Board	Board1	Page	Audio
Drawn	tachyon		
Reviewed			
		Version	Size	Page 1 Total 4
EasyEDA		V1.0	A4	stig@sdm.nz

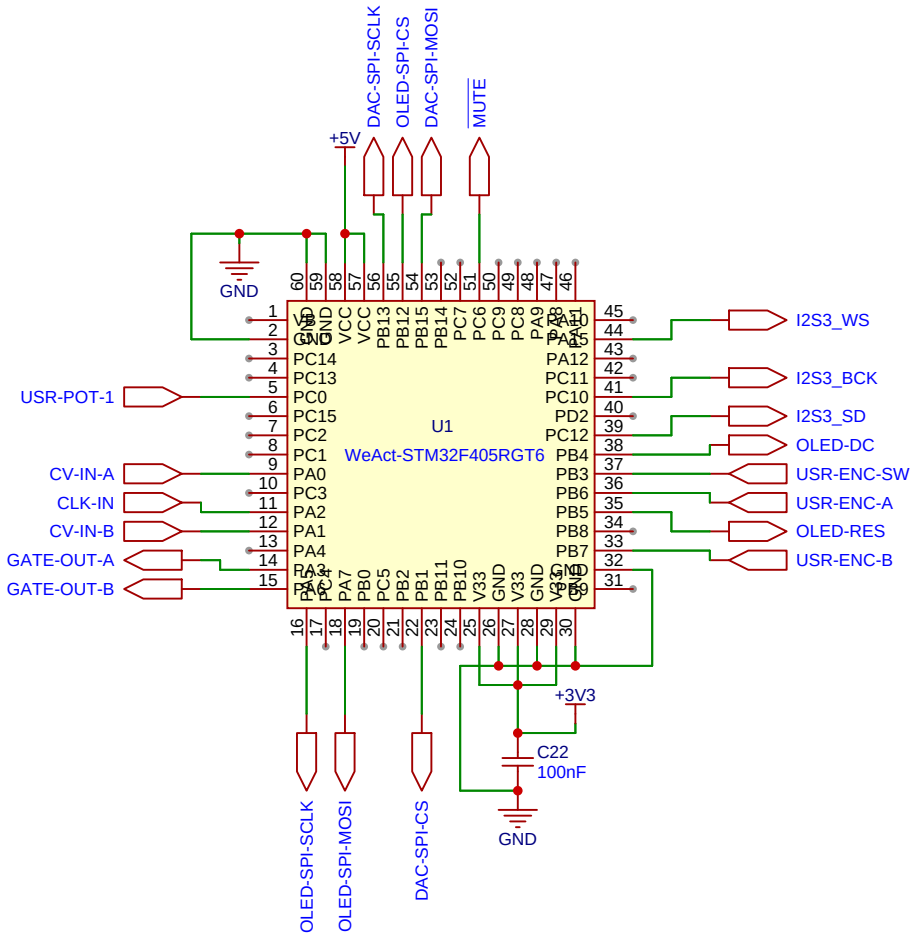

Schematic	tachyon	Create at	2026-04-07
		Update at	2026-04-15
Board	Board1	Page	MCU
Drawn		tachyon	
Reviewed			
		Version	Size	Page 2 Total 4
EasyEDA		V1.0	A4	EasyEDA.com

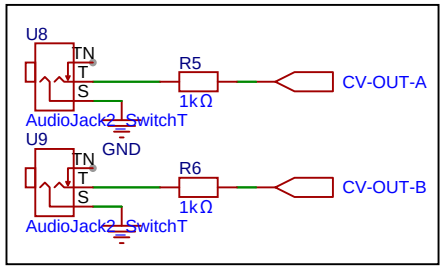

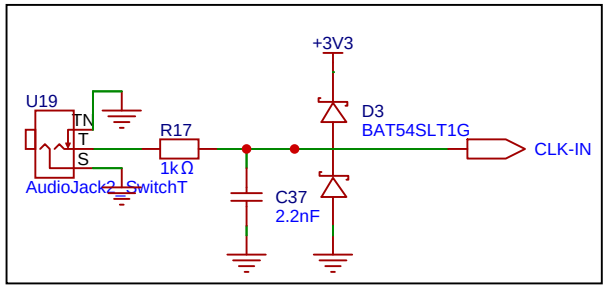

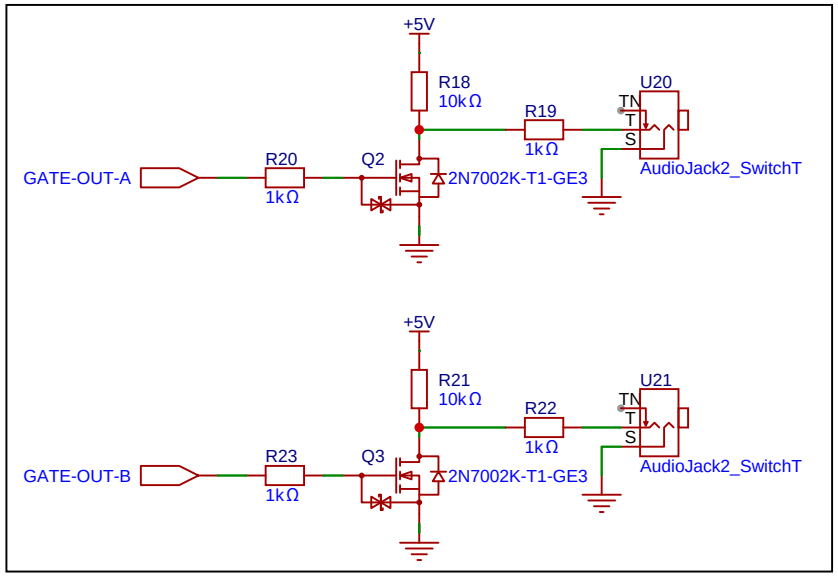

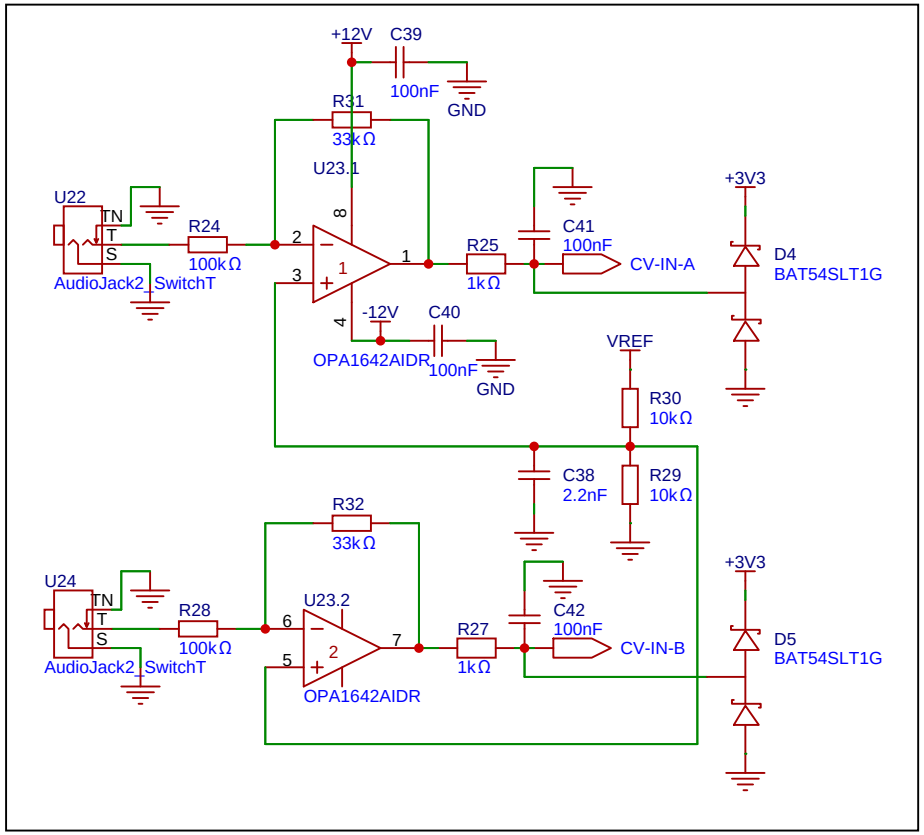

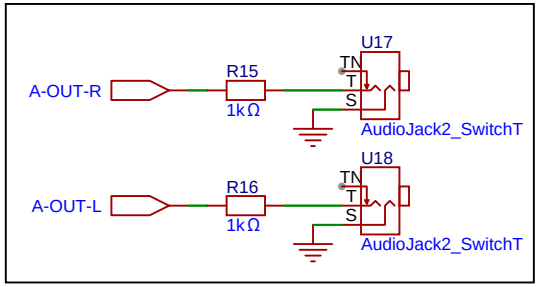

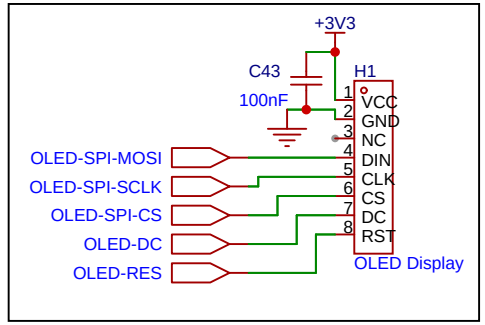

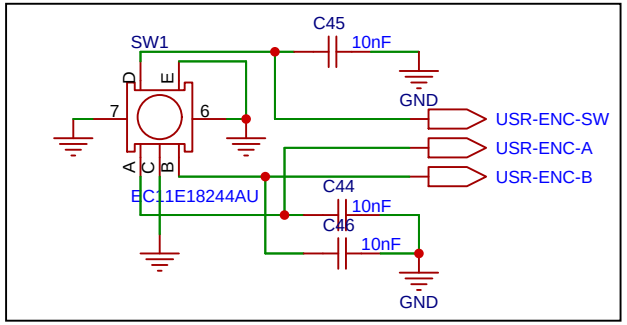

Schematic	tachyon	Create at	2026-04-07
		Update at	2026-04-15
Board	Board1	Page	IO
Drawn	tachyon		
Reviewed			
		Version	Size	Page 3 Total 4
EasyEDA		V1.0	A4	EasyEDA.com

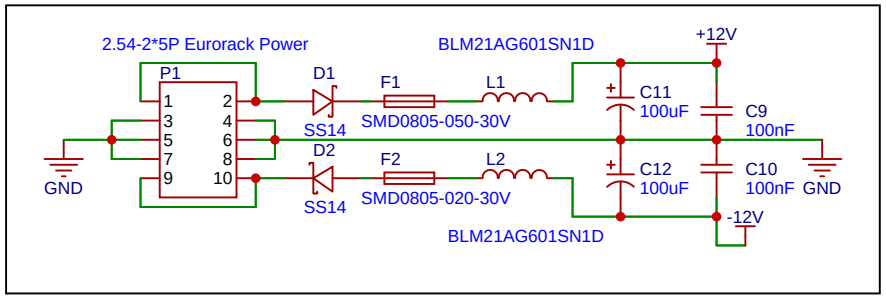

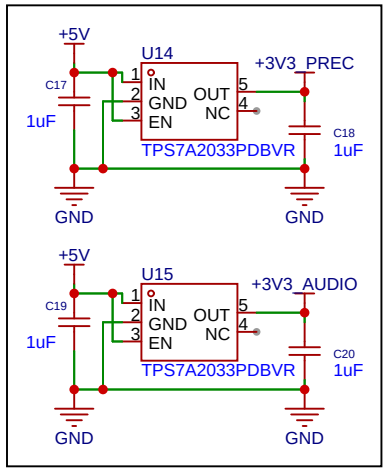

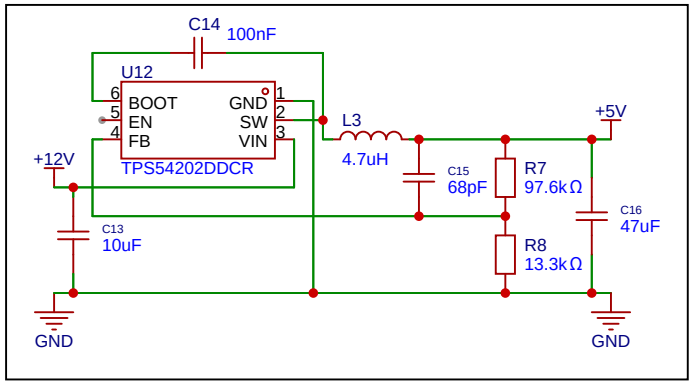

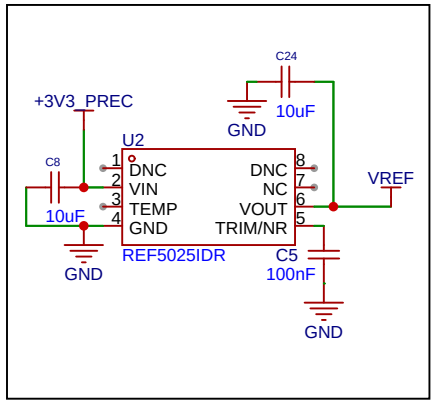

Schematic	tachyon	Create at	2026-04-11
		Update at	2026-04-11
Board	Board1	Page	Power
Drawn		tachyon	
Reviewed			
		Version	Size	Page 4 Total 4
EasyEDA		V1.0	A4	EasyEDA.com