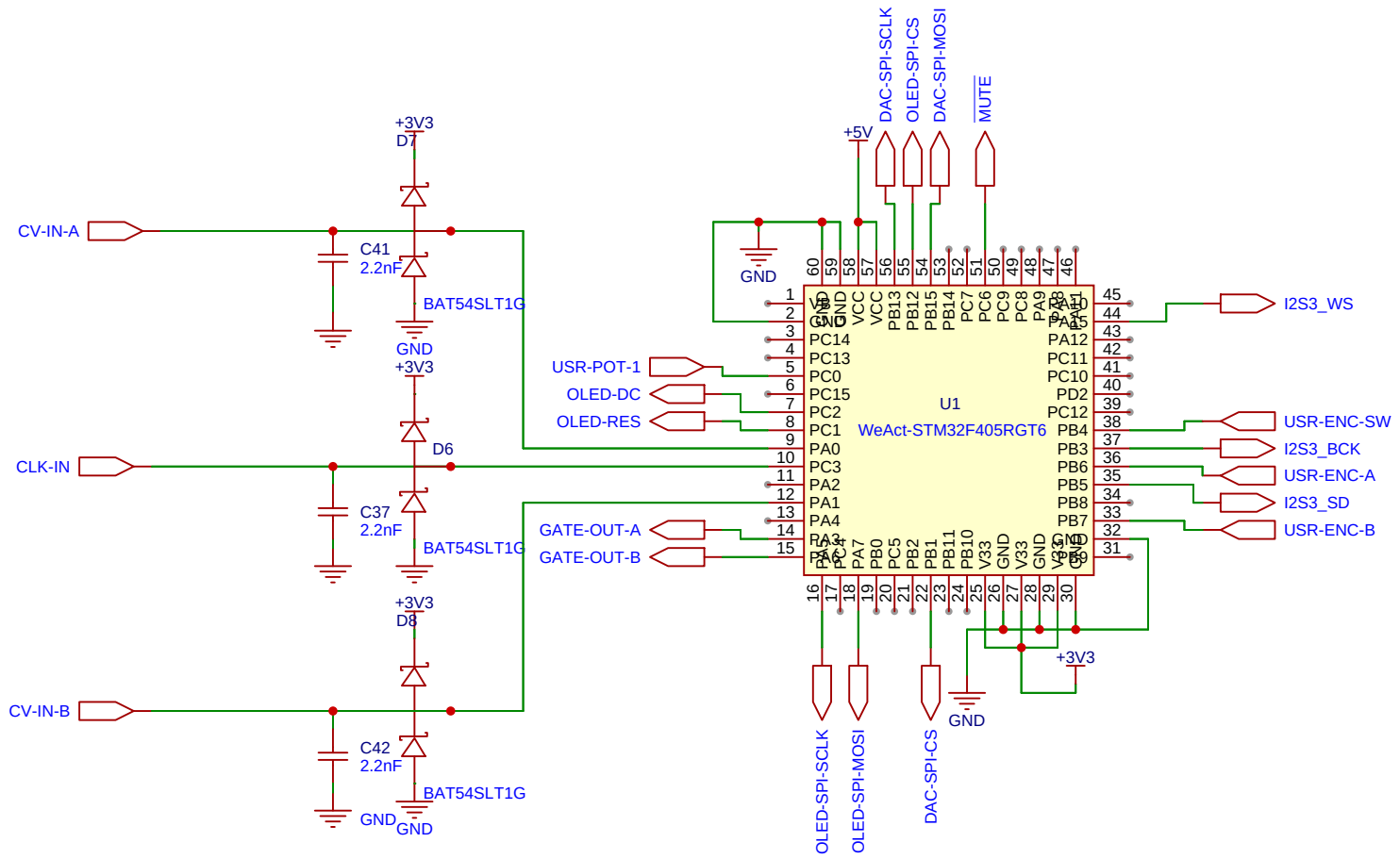

Schematic	backing-board-schematic	Create at	2026-04-17
		Update at	2026-04-29
Board	backing-board	Page	MCU
Drawn		tachyon	
Reviewed			
		Version	Size	Page 1 Total 4
EasyEDA		V1.0	A4	EasyEDA.com

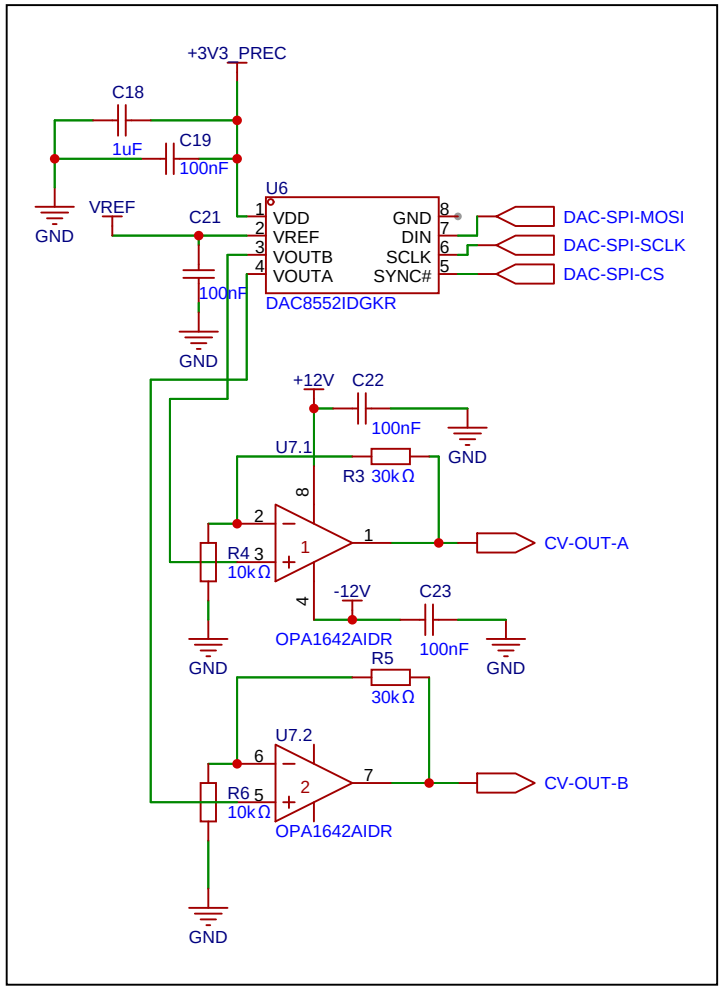

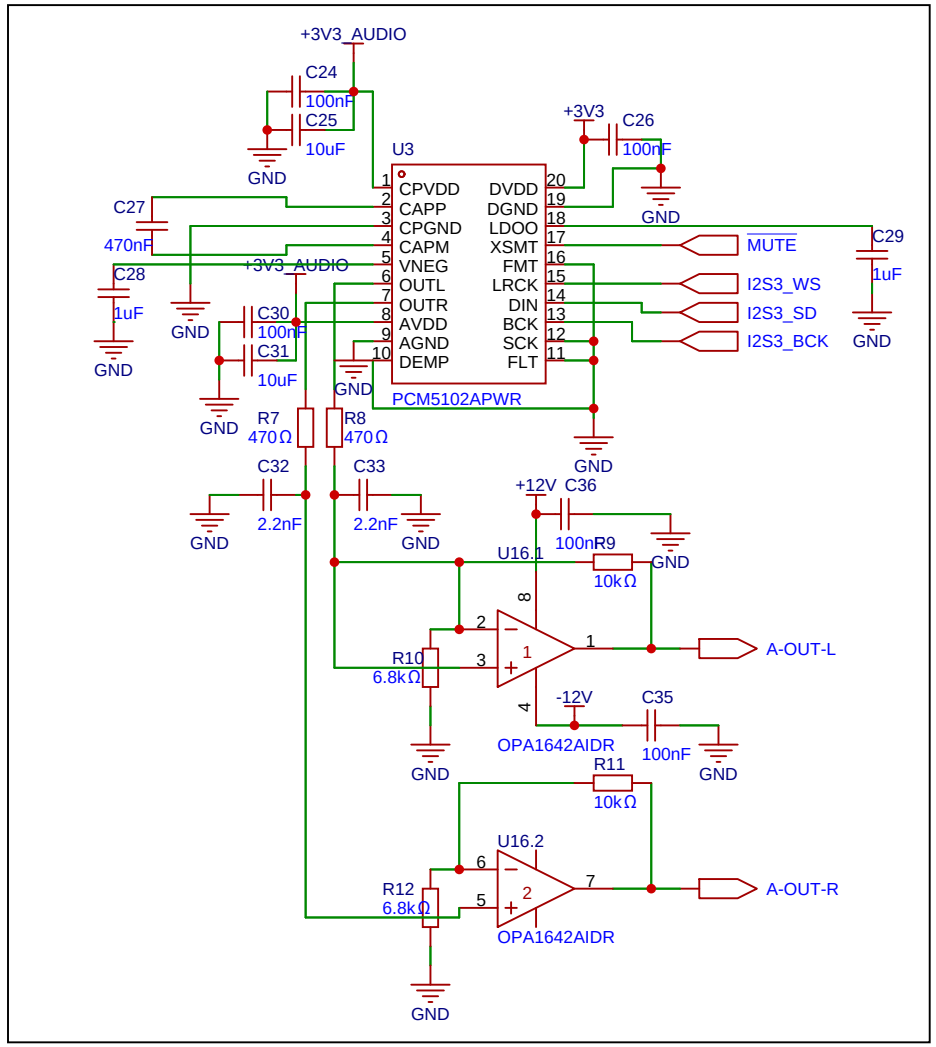

Schematic	backing-board-schematic	Create at	2026-04-17
		Update at	2026-04-20
Board	backing-board	Page	Audio
Drawn		tachyon	
Reviewed			
		Version	Size	Page 2 Total 4
EasyEDA		V1.0	A4	EasyEDA.com

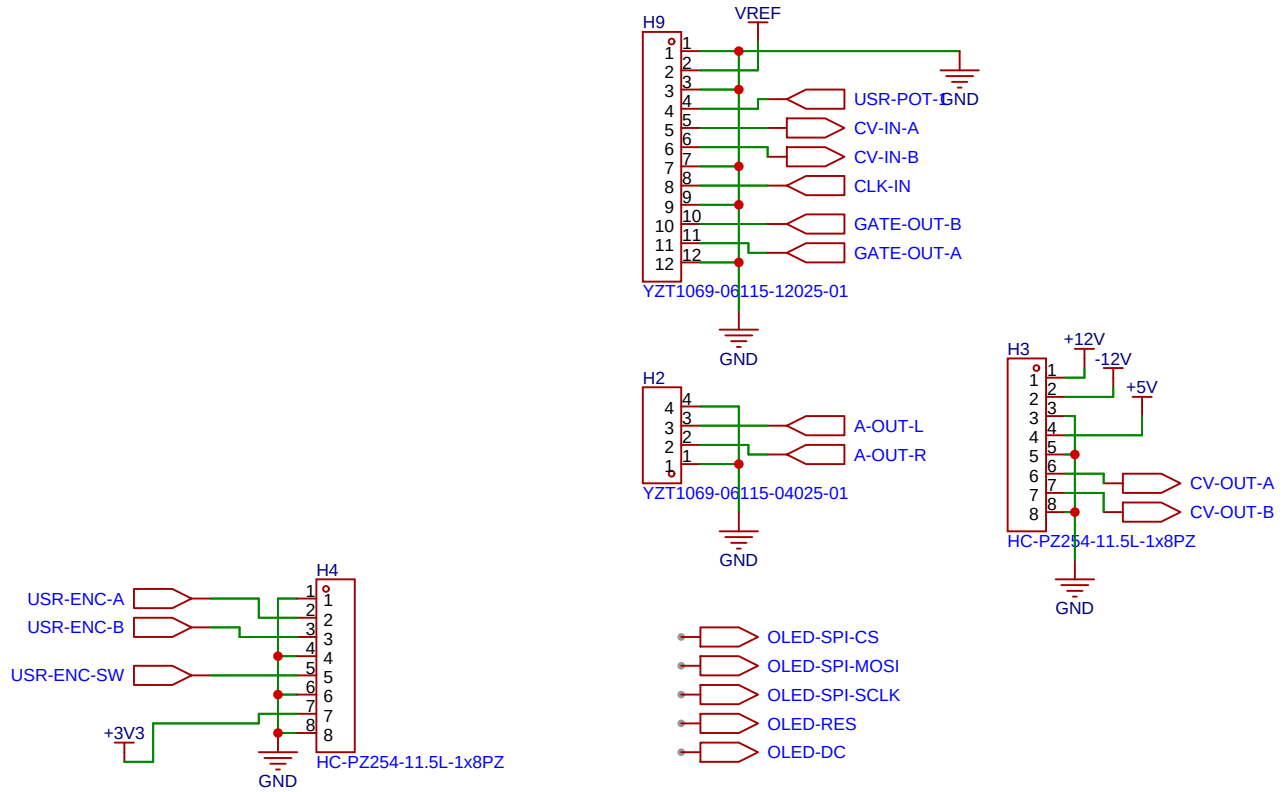

Schematic	backing-board-schematic	Create at	2026-04-17
		Update at	2026-04-23
Board	backing-board	Page	Interconnect
Drawn		tachyon	
Reviewed			
		Version	Size	Page 3 Total 4
EasyEDA		V1.0	A4	EasyEDA.com

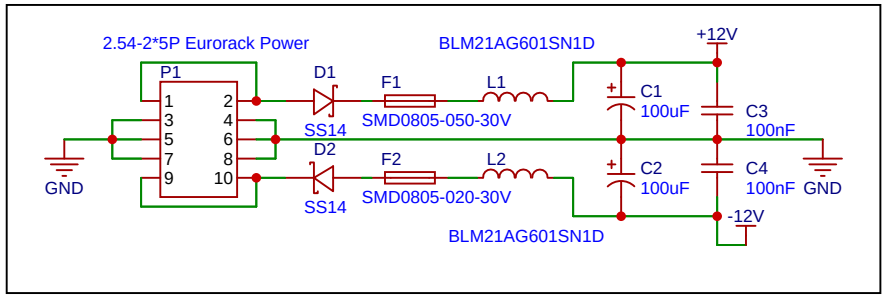

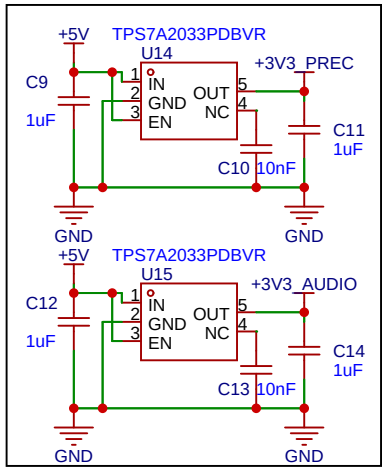

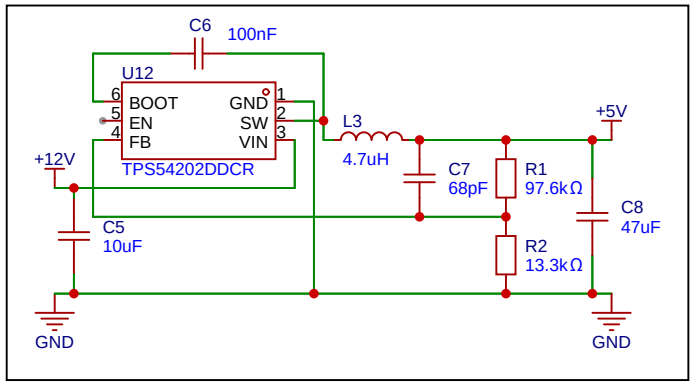

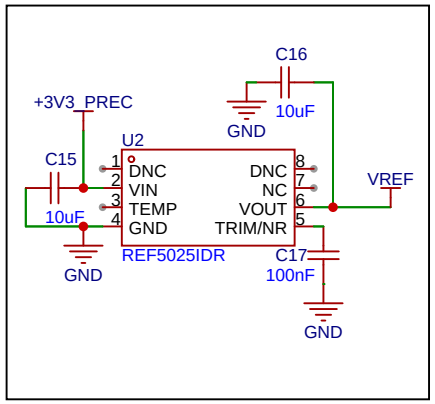

Schematic	backing-board-schematic	Create at	2026-04-17
		Update at	2026-04-20
Board	backing-board	Page	Power
Drawn		tachyon	
Reviewed			
		Version	Size	Page 4 Total 4
EasyEDA		V1.0	A4	EasyEDA.com