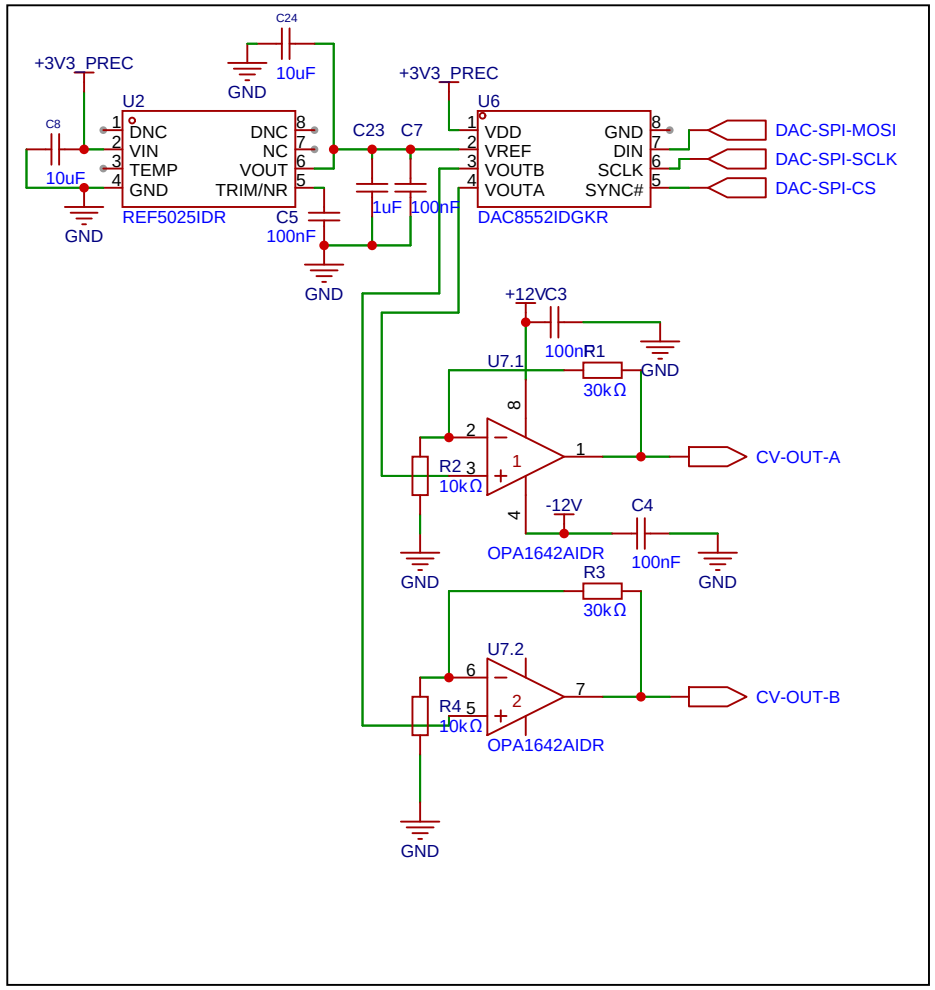

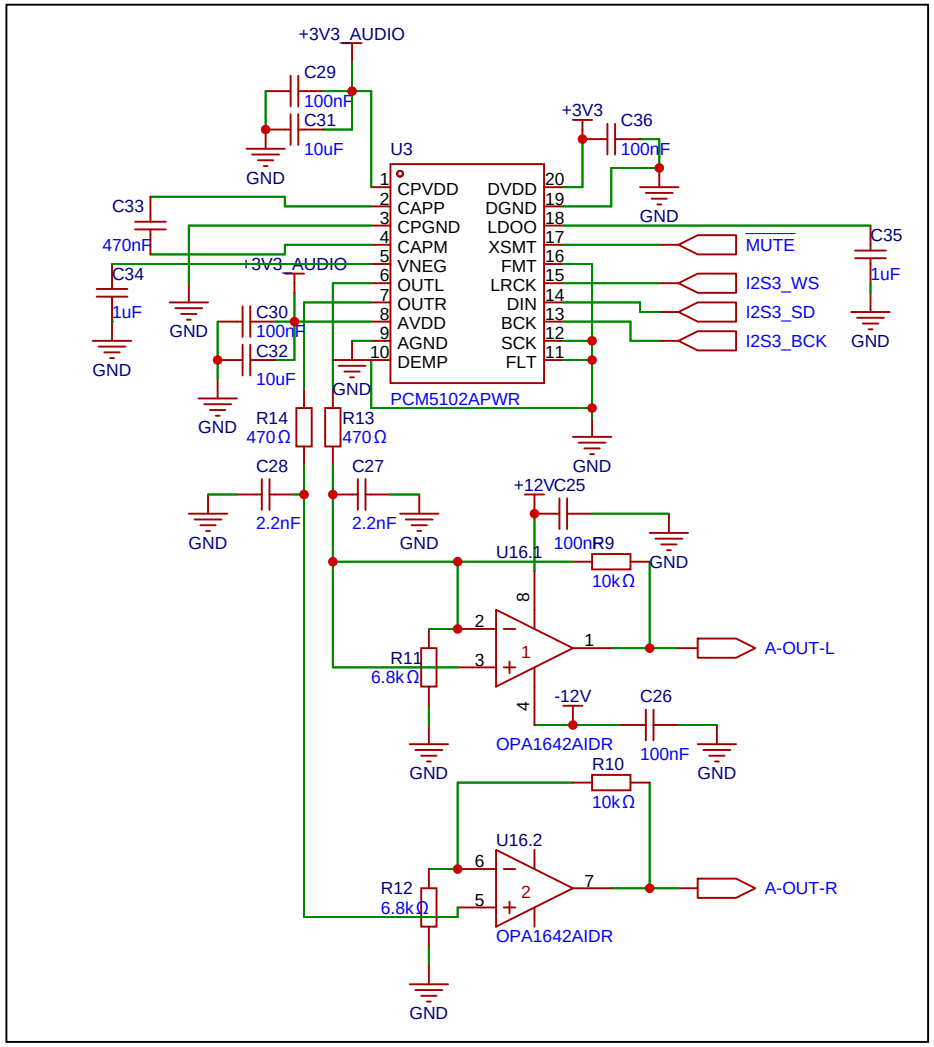

Schematic	tachyon	Create at	2026-04-07
		Update at	2026-04-08
Board	Board1	Page	Audio
Drawn	tachyon		
Reviewed			
	Version	Size	Page 1 Total 3
EasyEDA	V1.0	A4	stig@sdm.nz

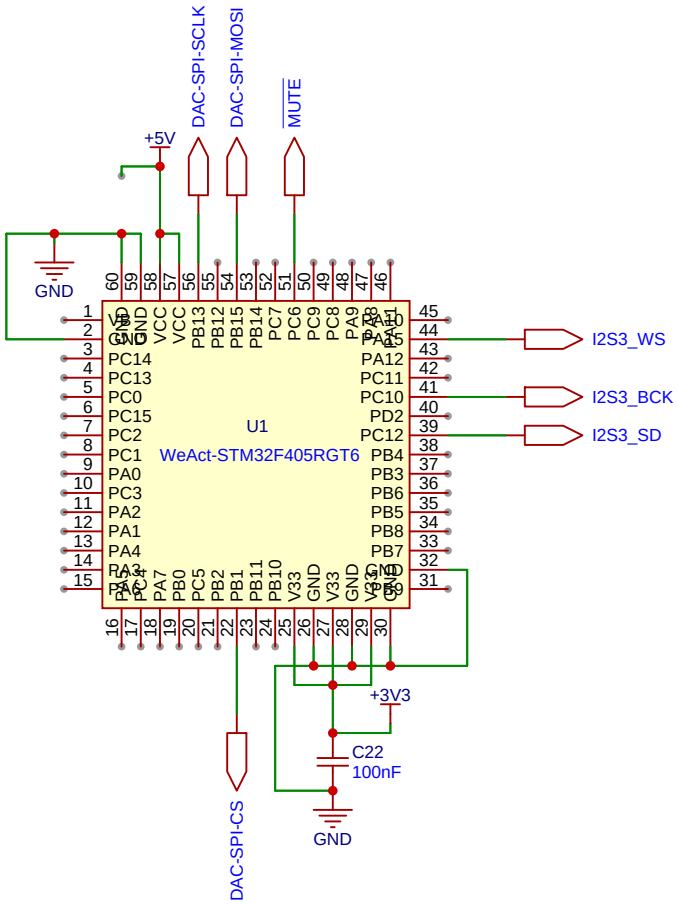

Schematic	tachyon	Create at	2026-04-07
		Update at	2026-04-08
Board	Board1	Page	MCU
Drawn		tachyon	
Reviewed			
		Version	Size	Page 2 Total 3
EasyEDA		V1.0	A4	EasyEDA.com

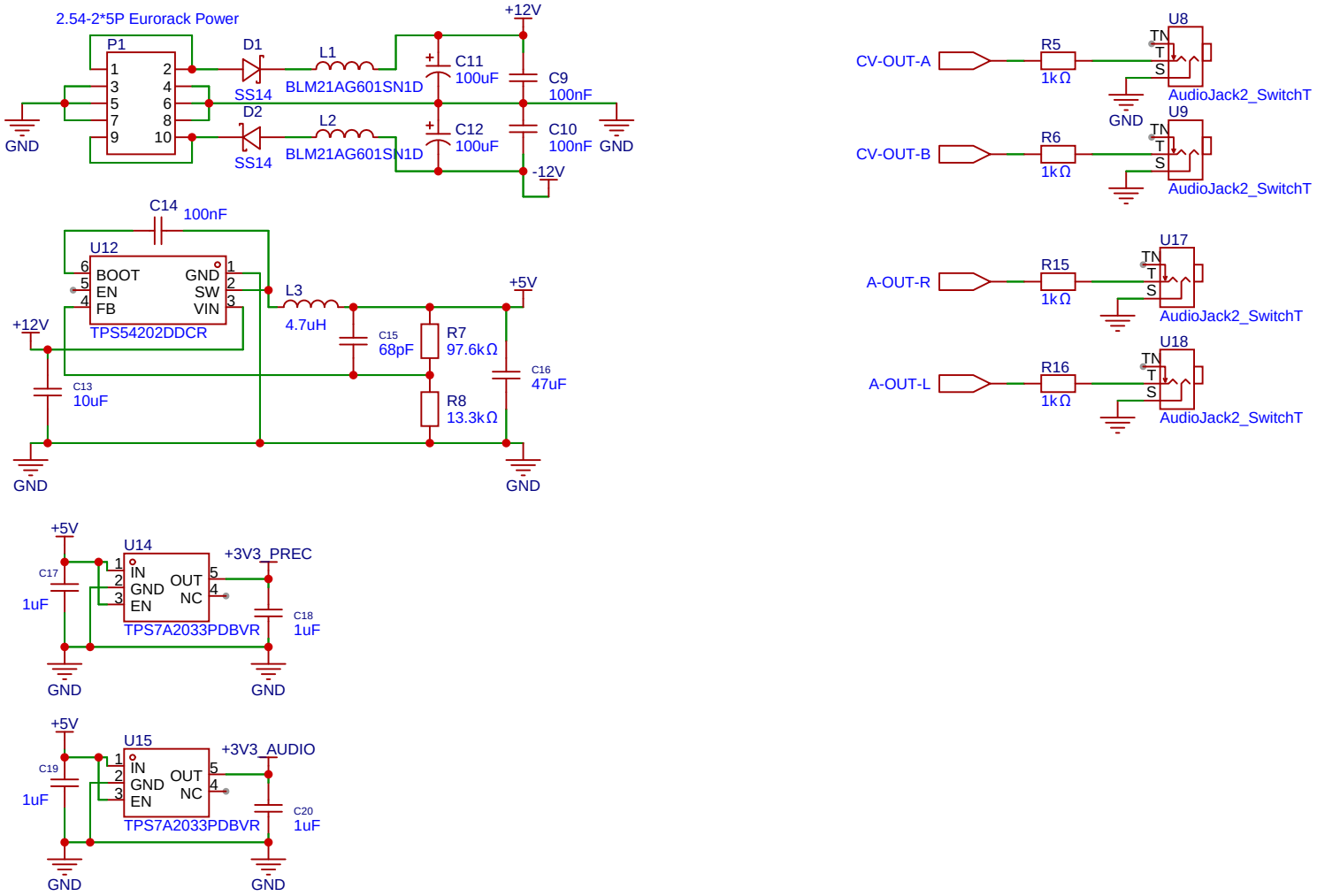

Schematic	tachyon	Create at	2026-04-07
		Update at	2026-04-08
Board	Board1	Page	IO
Drawn		tachyon	
Reviewed			
		Version	Size	Page 3 Total 3
EasyEDA		V1.0	A4	EasyEDA.com