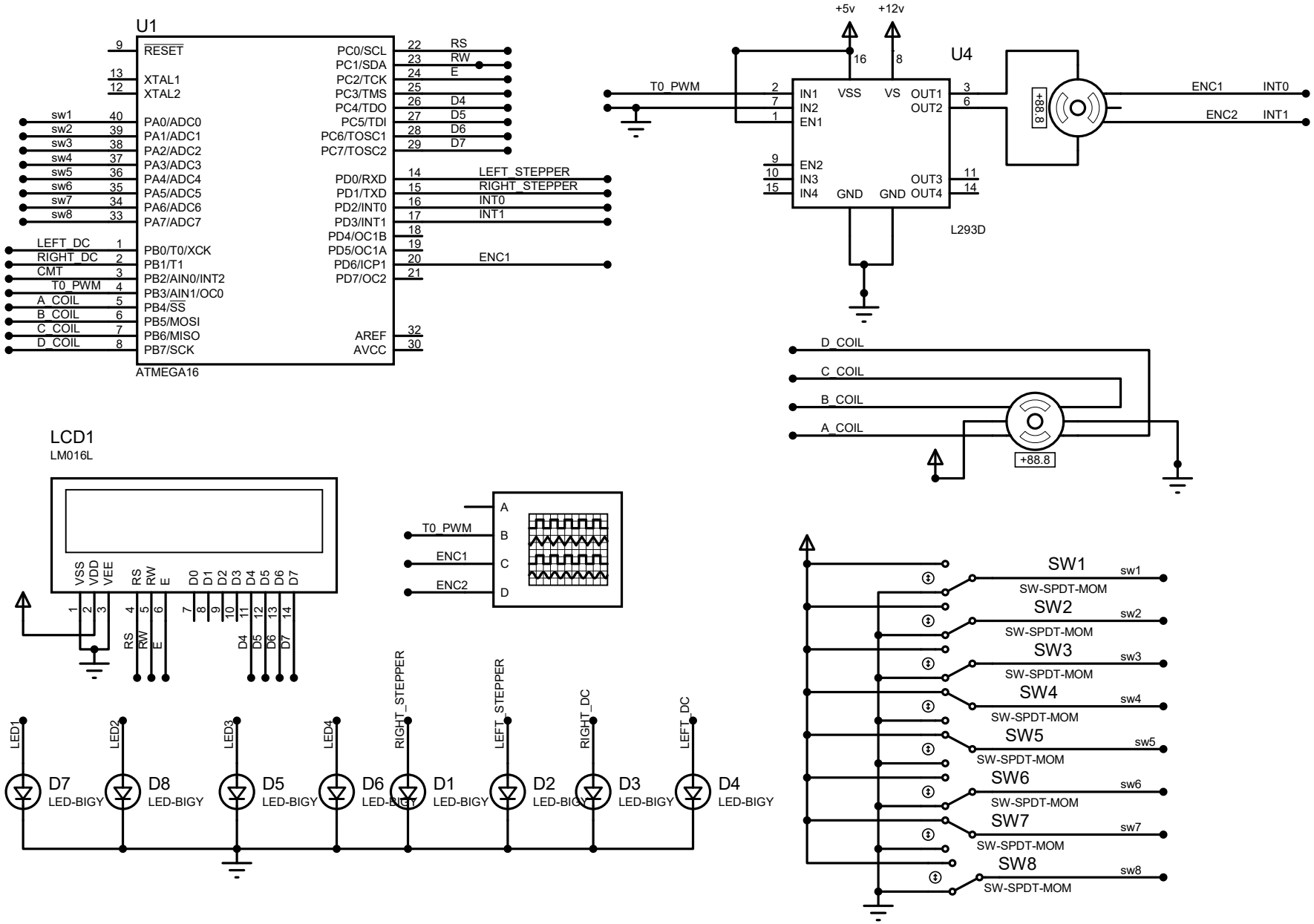
U1
ATMEGA16
RESET
XTAL1
XTAL2
PA0/ADC0
PA1/ADC1
PA2/ADC2
PA3/ADC3
PA4/ADC4
PA5/ADC5
PA6/ADC6
PA7/ADC7
PB0/T0/XCK
PB1/T1
PB2/AIN0/INT2
PB3/AIN1/OC0
PB4/SS
PB5/MOSI
PB6/MISO
PB7/SCK
PC0/SCL
PC1/SDA
PC2/TCK
PC3/TMS
PC4/TDO
PC5/TDI
PC6/TOSC1
PC7/TOSC2
PD0/RXD
PD1/TXD
PD2/INT0
PD3/INT1
PD4/OC1B
PD5/OC1A
PD6/ICP1
PD7/OC2
AREF
AVCC
RS
RW
E
D4
D5
D6
D7
LEFT_STEPPER
RIGHT_STEPPER
INT0
INT1
ENC1
sw1
sw2
sw3
sw4
sw5
sw6
sw7
sw8
LEFT_DC
RIGHT_DC
CMT
T0_PWM
A_COIL
B_COIL
C_COIL
D_COIL
+5v
+12v
U4
IN1
IN2
EN1
EN2
IN3
IN4
VSS
VS
GND
OUT1
OUT2
OUT3
OUT4
L293D
+88.8
ENC2
INT1
LCD1
LM016L
VSS
VDD
VEE
A
B
C
D
LED1
LED2
LED3
LED4
D7
D8
D5
D6
D1
D2
D3
D4
LED-BIGY
SW1
SW2
SW3
SW4
SW5
SW6
SW7
SW8
SW-SPDT-MOM