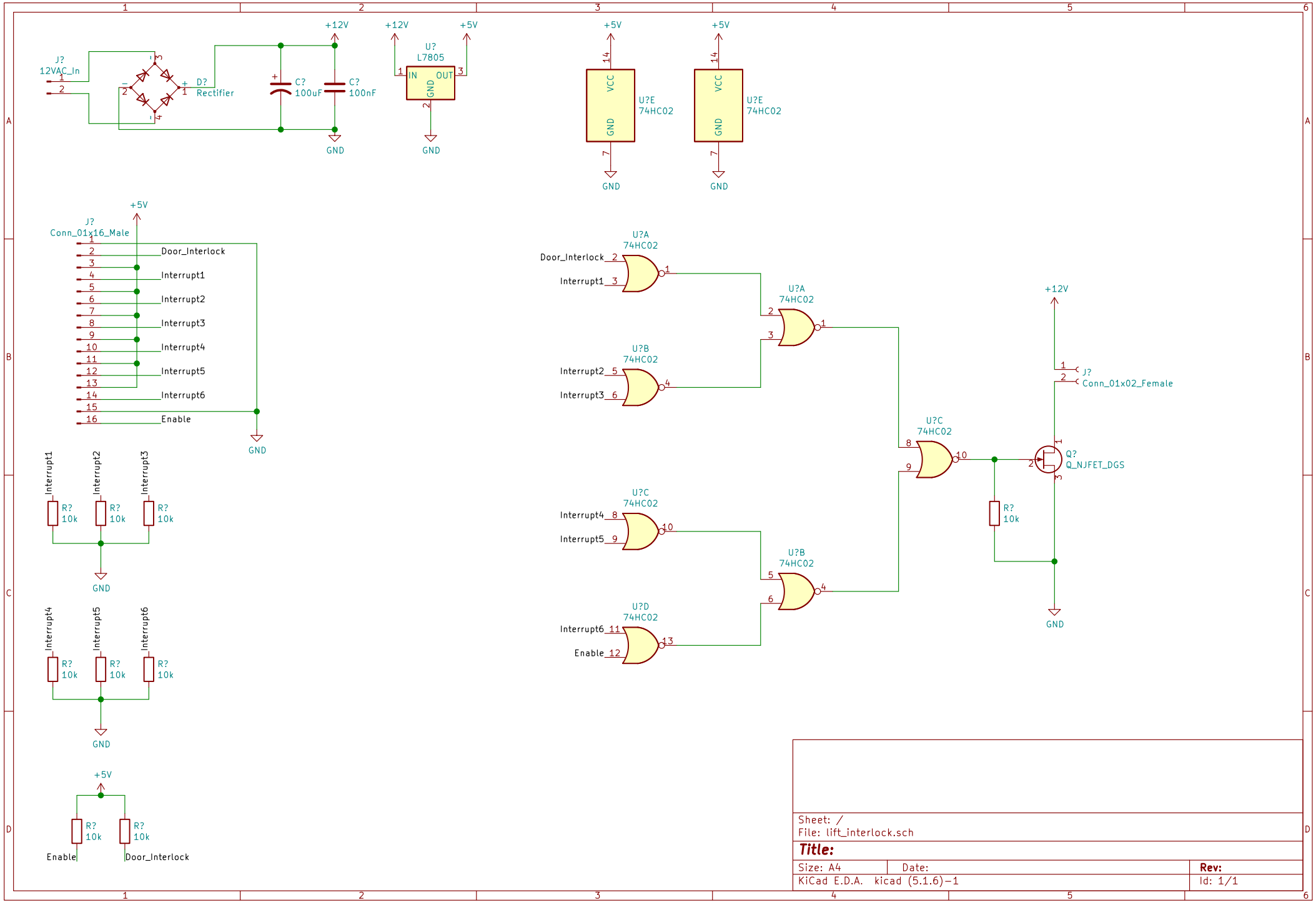
J?
12VAC_In
D?
Rectifier
C?
100uF
C?
100nF
+12V
GND
U?
L7805
IN
OUT
GND
+5V
U?E
74HC02
VCC
GND
J?
Conn_01x16_Male
Door_Interlock
Interrupt1
Interrupt2
Interrupt3
Interrupt4
Interrupt5
Interrupt6
Enable
R?
10k
U?A
74HC02
U?B
74HC02
U?C
74HC02
U?D
74HC02
Q?
Q_NJFET_DGS
J?
Conn_01x02_Female
Sheet: /
File: lift_interlock.sch
Title:
Size: A4
Date:
Rev:
KiCad E.D.A. kicad (5.1.6)-1
Id: 1/1