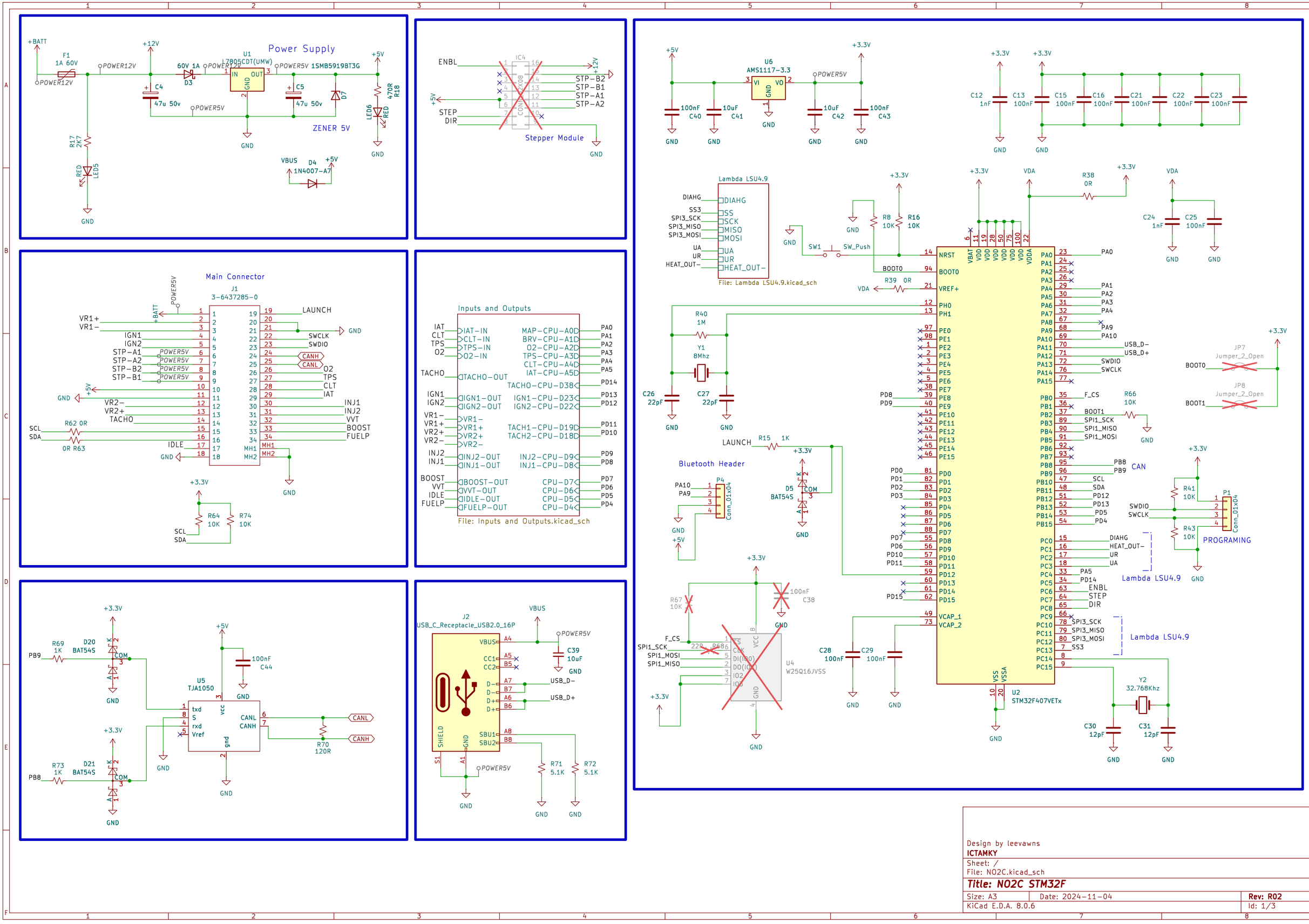

Design by leevawns
ICTAMKY
Sheet: /
File: NO2C.kicad_sch

Title: NO2C STM32F

Size: A3	Date: 2024-11-04	Rev: R02
KiCad E.D.A. 8.0.6		Id: 1/3

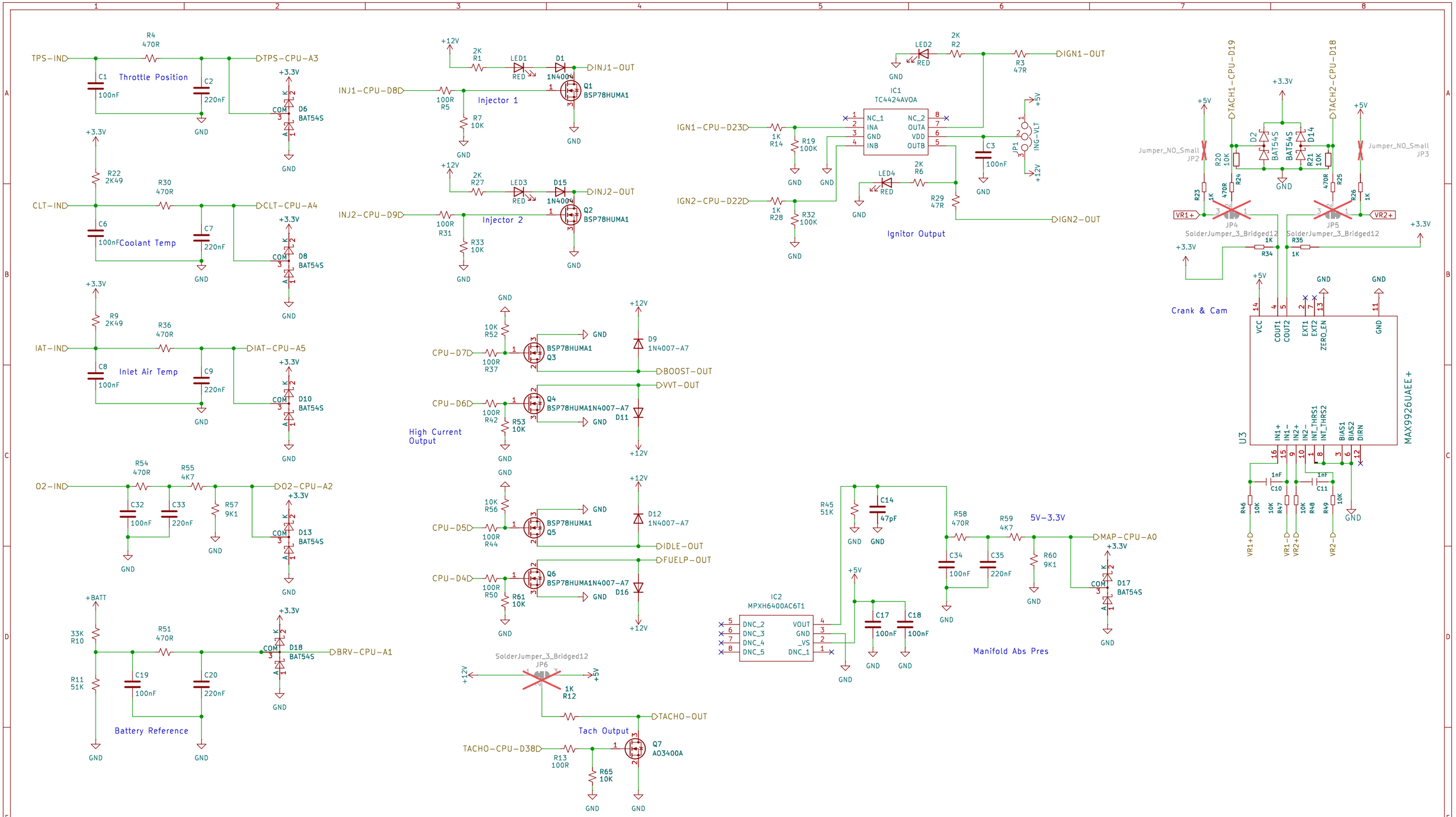

Design by leevawns
ICTAMKY

Sheet: /Inputs and Outputs/
File: Inputs and Outputs.kicad_sch

Title: NO2C STM32F

Size: A3	Date: 2024-11-04	Rev: R02
KiCad E.D.A. 8.0.6		Id: 2/3

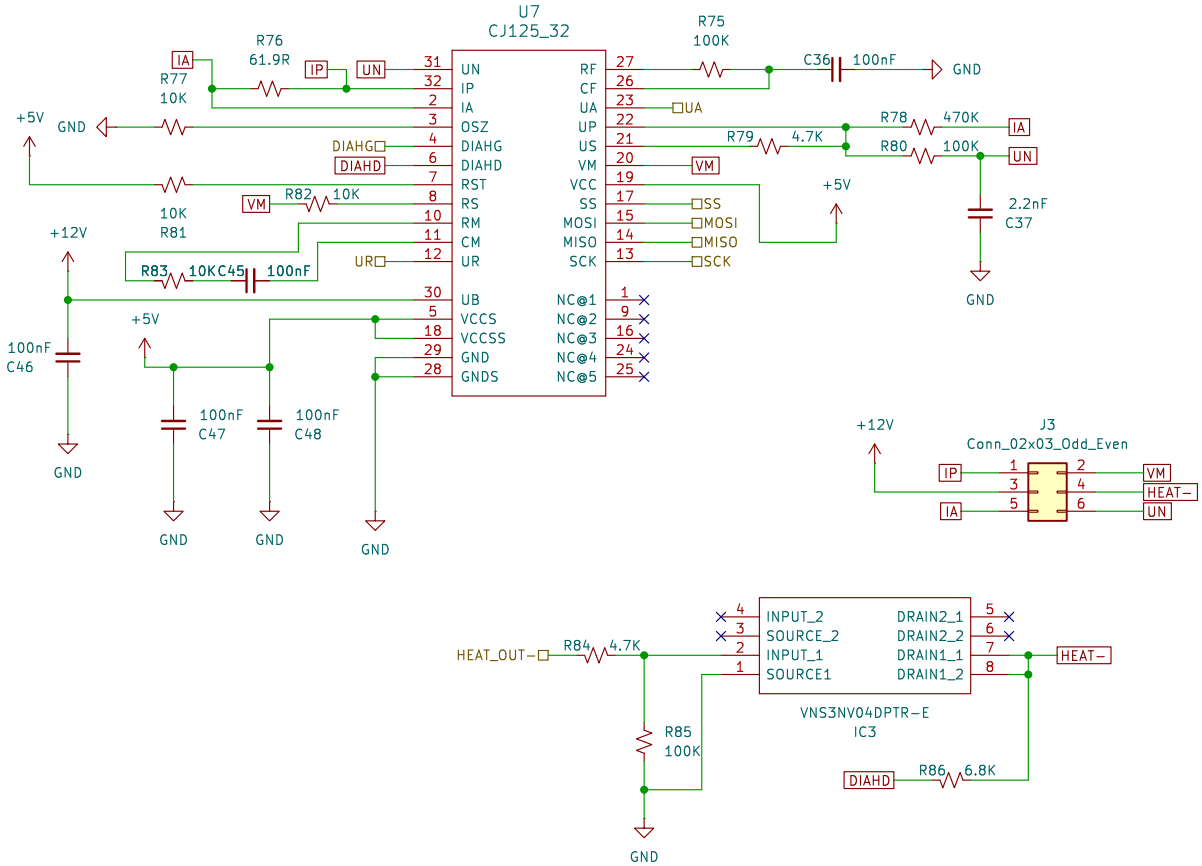

Design by leevawns
ICTAMKY

Sheet: /Lambda LSU4.9/
File: Lambda LSU4.9.kicad_sch

Title: NO2C STM32F

Size: A4	Date: 2024−11−04	**Rev: R02**
KiCad E.D.A. 8.0.6		Id: 3/3