Xyzzy Semiconductor

Launch Control Chip

XS-LCC-01-xxx-xx
Architecture Draft

Block Diagram

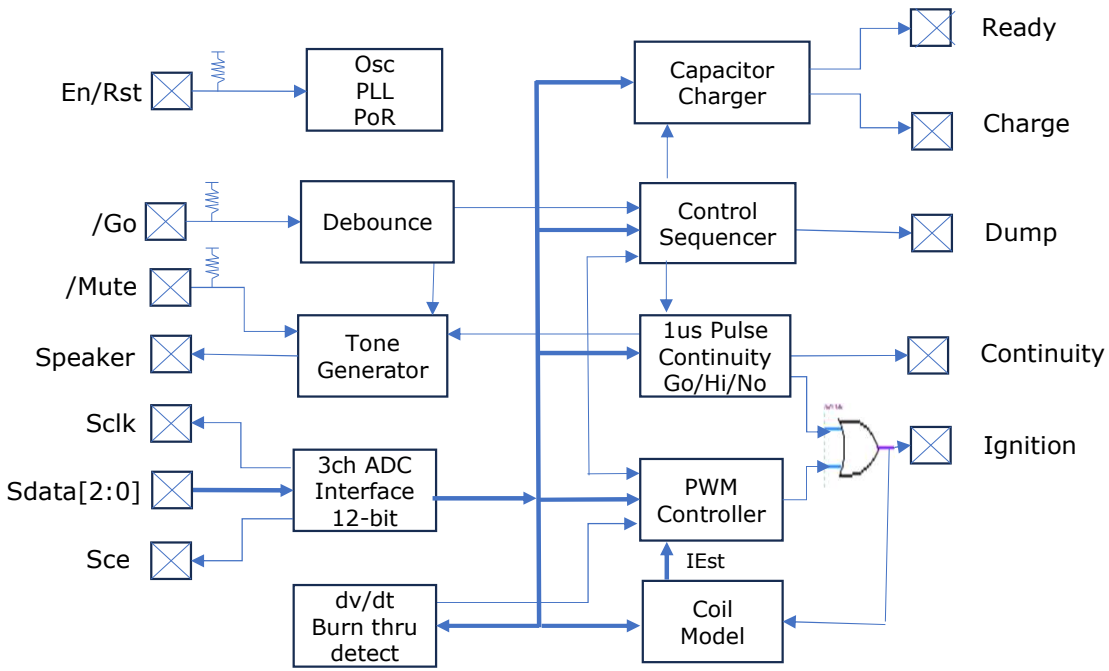

Typical Applications

- Handheld model rocket launch controller
- Relay replacement for large launch field remote ignition boxes
- Push-button enhancement for multi-channel club launch system

Features

- Digital Model Rocket Launch Controller
- Current controlled, independent of wire and cable.
- Repeatable, predictable igniter energy delivery.
- PWM current control loops utilizing digital coil models.
- 3 Channel Analog to digital 12-bit serial input.
- PWM outputs for FET driving of: flyback charger, ignition drive, and capacitor safety dump
- Built in sequencer beings upon power on and enable.
- 3 Joule/sec flyback capacitor charger PWM output
- 2ma Ready-LED output indicates capacitor charge state.
- Active low Go button input with pull-up resistor, debounce and tone feedback.
- Speaker driver pre-amp output for audio.
- Depressing push button initiates a current controlled pulse.
- Pulse ends with: burn through, capacitor discharge, or timeout
- Stepped current ramp form 2 amp to 8 amp designed to for the full range of consumer or professional igniters.
- Remaining capacitor charge is safely discharged after pulse. completion. (abort power-down discharge externally integrated)
- Microsecond 0.25mJ pulse continuity at 1 Hz repeat rate.
- 3 level continuity discrimination:
    - GO, <20ohm → Cont LED On, 1 beep/repeat,
    - HI, >20 ohm→ Cont LED fast blink, 2 beeps/repeat,
    - NO, open cct → Cont LED Off, 3 beeps/repeat
- 2ma Continuity-LED output
- Mute input to silence continuity beeps after 1st repeat.
- Built in power on reset, oscillator, and PLL
- Pull-ups on Go , Mute, and enable Inputs
- Low Power, 1.1v vdd, 3.3v vddio
- Small size, 3mm x 3mm, Low cost.

©2025 Eric Pearson

XS **Xyzzy Semiconductor**

Launch Control Chip

XS-LCC-01-xxx-xx
Architecture Draft

Typical Application

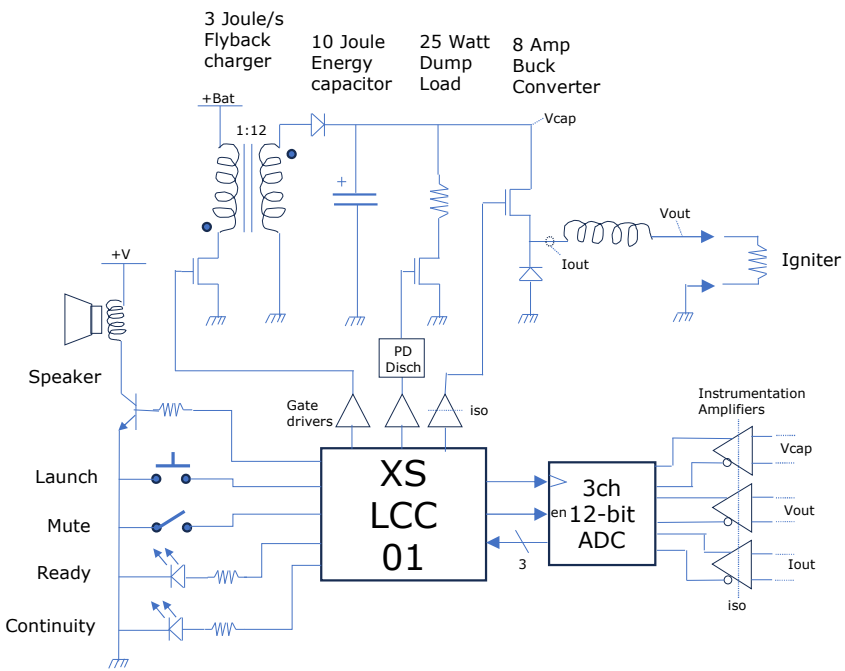

Description

The XS-LCC-01 is a small 3x3mm chip with a complete system for a capacitive discharge model rocket launch controller. It provides capacitor charging, igniter continuity testing, current controlled igniter drive, and safety capacitor energy dump. Control and status interface suitable for either digital or direct front panel and speaker connections. The XS-LCC-01 implement a complete system from power on, charging, continuity, launch, and dump of capacitor energy operable within a 5 second countdown.

The XS-LCC-01's algorithms control the systems power stage via digital pwm outputs based on ADC serial input feedback.

There are 3 pwm outputs to control: 1amp capacitor charger, a 2-8amp igniter output, and a 25watt resistor capacitor energy dump.

The capacitor charger generates a pwm output for a flyback-converter with optimized for 1amp battery operation and while charging to 320V.

The ignition driver generates a pwm output for a buck-converter that delivers constant current control over the full capacitor discharge voltage range. The igniter current pulse profile begins with steps from 2 amps to 8 amps suitable for 0.5ohm consumer and 2ohm profession igniters and matches. The full energy of the capacitor is used with a timeout and burn-through detection for robustness.

The energy dump drives an external discharge circuit to dump any remaining capacitor charge into a load power resistor upon completion.

©2025 Eric Pearson

Pin Assignments - STQFN

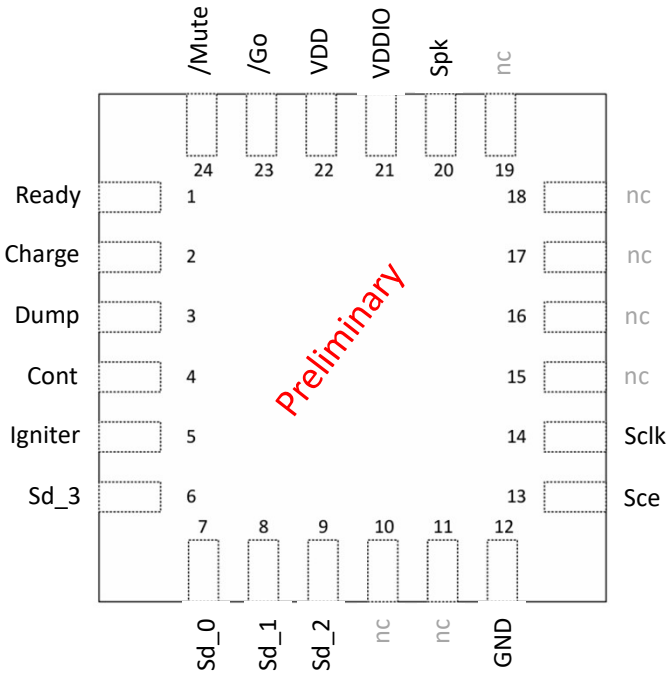

(Top View)
STQFN-24

Pin Description

Name	Description
GND	Common connection for power and signals
VDD	Core power: 1.1V 5%
VDDIO	I/O power: 1.8V to 3.3V
/Mute	Active low input. Mute continuity beeps after 1st tone. Internal pullup to Vddio.
/Go	Active low input. Debounce 5ms low input triggers igniter current drive. Internal pullup to Vddio.
Ready	2ma drive for LED to signal that capacitors are charging or charged.
Charge	PWM drive to control charger FET gate driver.
Dump	control signal to dump FET gate driver (via external power down capacitor discharge circuitry)
Cont	2ma drive for LED to signal continuity, updated after each continuity cycle
Igniter	PWM drive to control igniter output FET gate driver.
Sclk	Output serial clock for serial ADC input
Sce	Output chip enable for serial ADC control
Sd[3:0]	Serial data inputs, 1 bit from each ADC.

©2025 Eric Pearson

Energy Performance

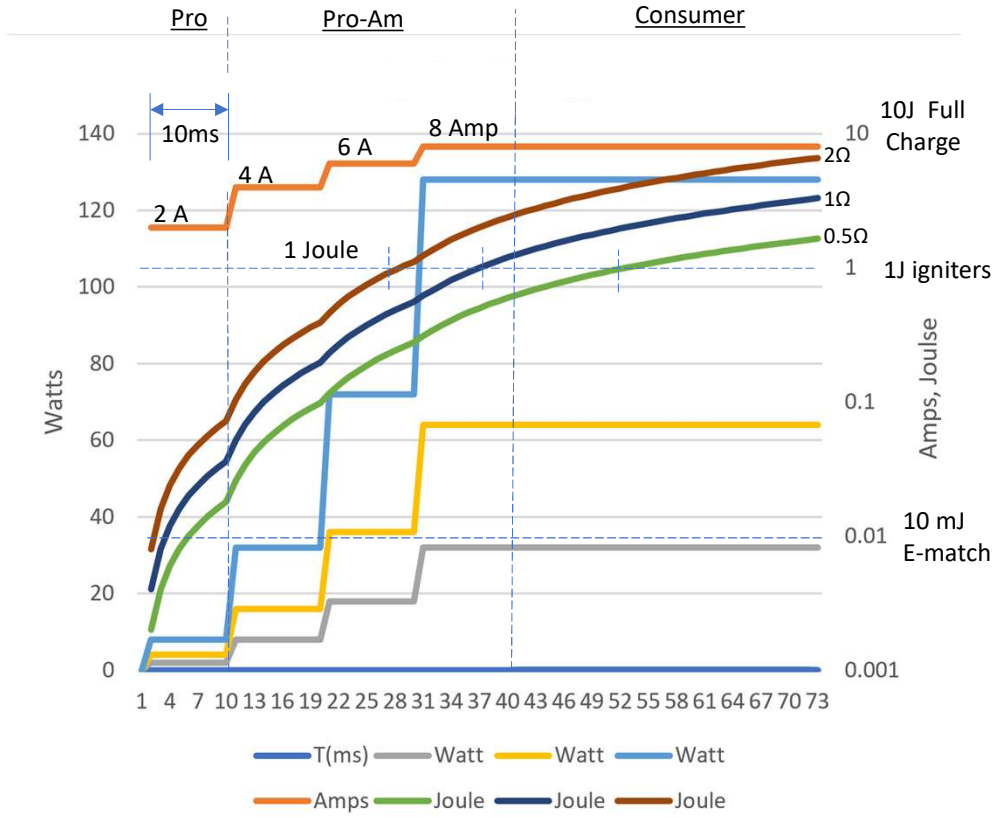

Performance

The PS-LCC-01 delivers energy to a resistive igniter.
Energy is delivered with regulated current making the igniter response independent of the wiring resistance and the number of igniters in series. The response repeatable for the given resistance with power only limited by the capacitor total energy.
A stepped current profile is employed to address a full range of igniters from pro e-matches to consumer igniters delivering a repeatable igniter energy delivery.
The igniter current profile begins at 2 amps and steps at 10ms intervals to 4A, 6A, and finally 8A.Since The current steps target the full range of igniters types without premature bursting while rapidly providing initiation energy.
The 2 amp step is intended for 2Ω professional e-matches with a 10mJoule all-fire energy and can support 50+ in series with sub 10ms response.
The next 30ms delivers 1 joule of ignition energy with 4, 6 and 8 amp steps addressing pro-am range 1Ω-2Ω+ igniters
The remaining 70ms or more delivers energy at a full 8 amps providing a rapid 1 Joule for low resistance range 0.5Ω and less consumer igniters.

©2025 Eric Pearson

Package Outline Drawing for STQFN 24L

JEDEC MO-220

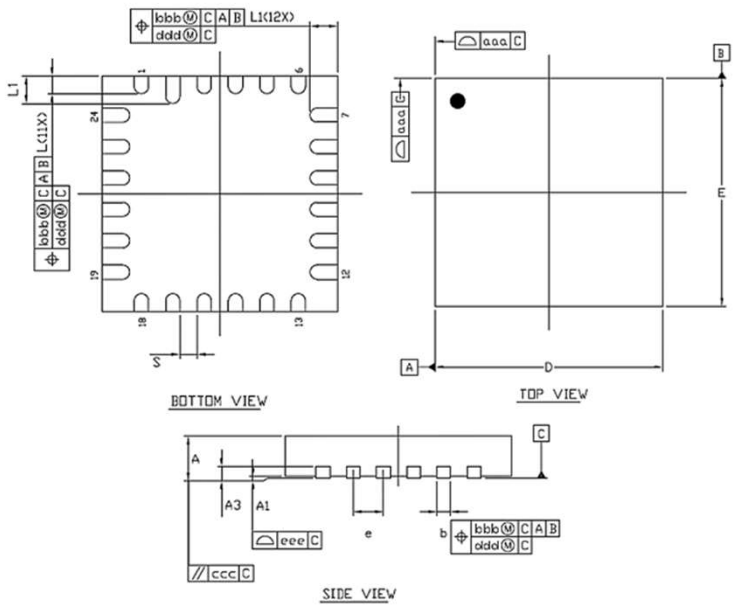

PKG CODE	UQFN					
SYMBOLS	MILLIMETER			INCH		
	MIN.	NOM.	MAX.	MIN.	NOM.	MAX.
A	0.50	0.55	0.60	0.020	0.022	0.024
A1	0.00	0.02	0.05	0.000	0.001	0.002
A3	0.10	0.15	0.20	0.004	0.006	0.008
b	0.13	0.18	0.23	0.005	0.007	0.009
D	2.95	3.00	3.05	0.116	0.118	0.120
E	2.95	3.00	3.05	0.116	0.118	0.120
e	0.40 BSC			0.016 BSC		
L	0.175	0.225	0.275	0.007	0.009	0.011
L1	0.30	0.35	0.40	0.012	0.014	0.016
S	0.22 REF.			0.009 REF.		
aaa	0.07			0.003		
bbb	0.07			0.003		
ccc	0.10			0.004		
ddd	0.05			0.002		
eee	0.08			0.003		

"A1" MAX LEAD COPLANARITY 0.05mm
STANDARD TOLERANCE : ±0.05

NOTES :
1. ALL DIMENSIONS ARE IN MILLIMETERS.
2. DIMENSION b APPLIES TO METALLIZED TERMINAL AND IS MEASURED BETWEEN 0.15mm AND 0.30mm FROM THE TERMINAL TIP. IF THE TERMINAL HAS THE OPTIONAL RADIUS ON THE OTHER END OF THE TERMINAL, THE DIMENSION b SHOULD NOT BE MEASURED IN THAT RADIUS AREA.
3. BILATERAL COPLANARITY ZONE APPLIES TO THE EXPOSED HEAT SINK SLUG AS WELL AS THE TERMINALS.

PAD SIZE	LEAD FINISH		JEDEC CODE
	Pure Tin	PPF	
	V	X	N/A

Recommended PCB land pattern

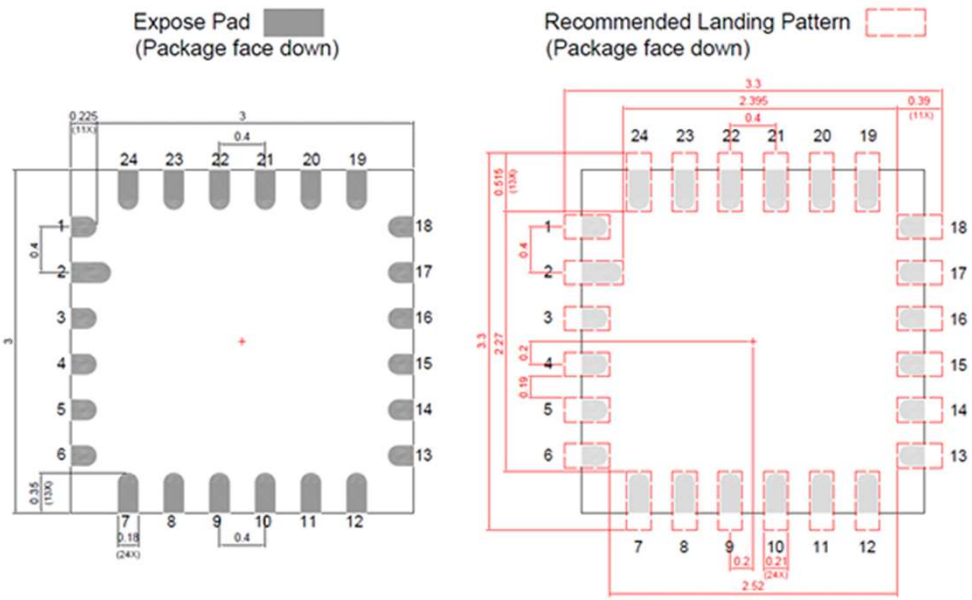

©2025 Eric Pearson

Xyzzy Semiconductor

XS-LCC-01 Evaluation Board

XS-LCC-01-EB
Architecture Draft

Launch control chip evaluation board

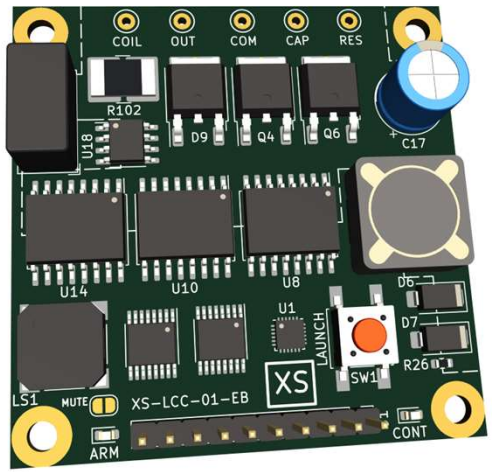

Purpose

- Provides an evaluation platform for the LCC chip.
- Reference design for development of LCC launch systems
- Rapid integration into prototype launcher controllers
- Evaluation platform for core components: inductor coil, capacitor bank, dump resistor, battery, and power supply.

Features

- 50mm x 50mm evaluation board for the XS-LCC-01 launch control chip
- Features XS-LCC-01 launch control chip with key support circuitry
- Topology chosen for grounded output and capacitor and simplified wiring.
- Differential isolated instrumentation amplifiers, for input/output voltages/current measurement.
- 4x 12-bit SAR differential analog to digital converters
- 320 Volt capacitor charger flyback transformer
- Discharge (dump) FET driver with discharge-on-power-down safety circuitry.
- 10 Amp power stage FET and freewheel diode
- High side FET driver and isolated power supply.
- Precision 0.005 ohm current sense shunt resistor
- On-board speaker, arm and cont LEDs, launch push button, and mute jumper.
- 0.100” header connects: power, launch and mute controls, and open collector outputs for arm and continuity panel lamps.

©2025 Eric Pearson

Example Applications

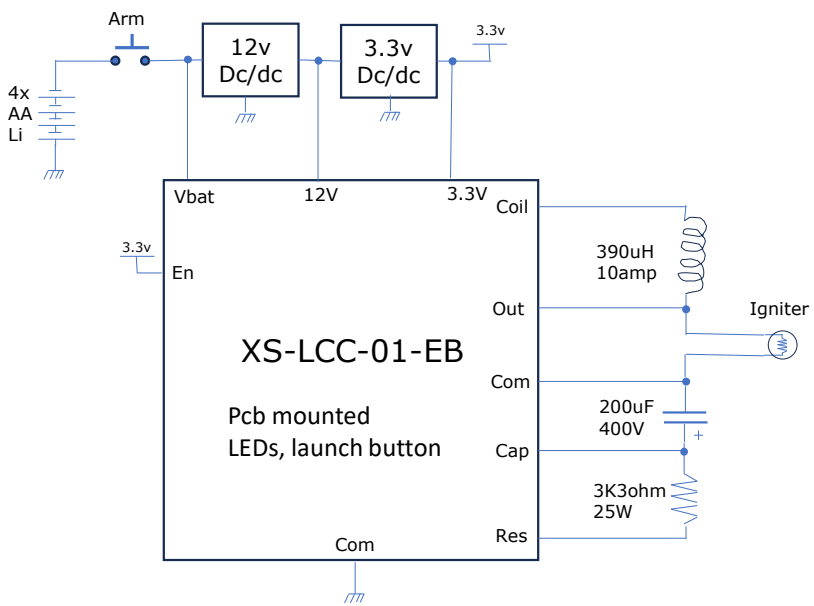

a) Minimal operational circuit

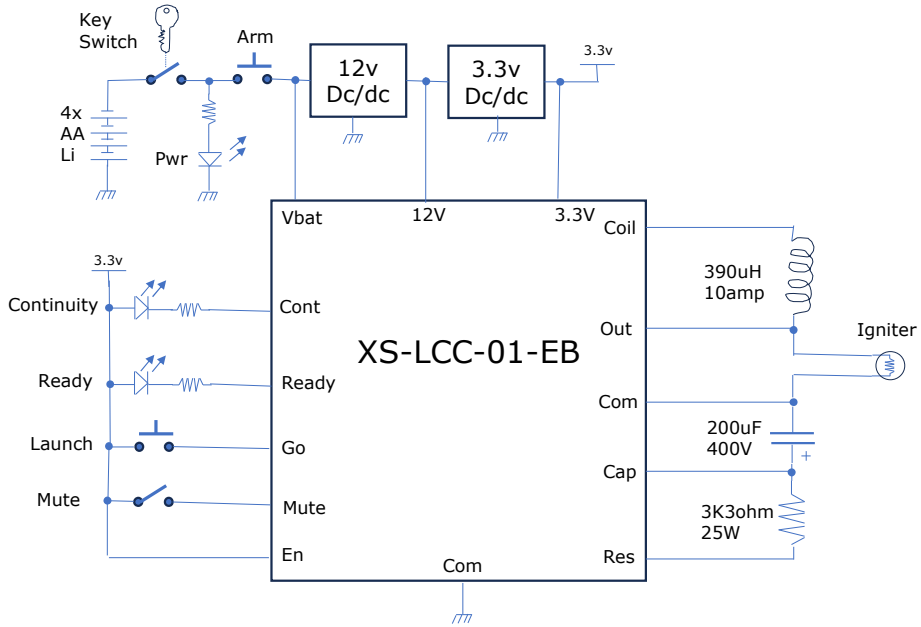

b) Single channel, Power-on initiated arming sequence

©2025 Eric Pearson

Example Applications (cont)

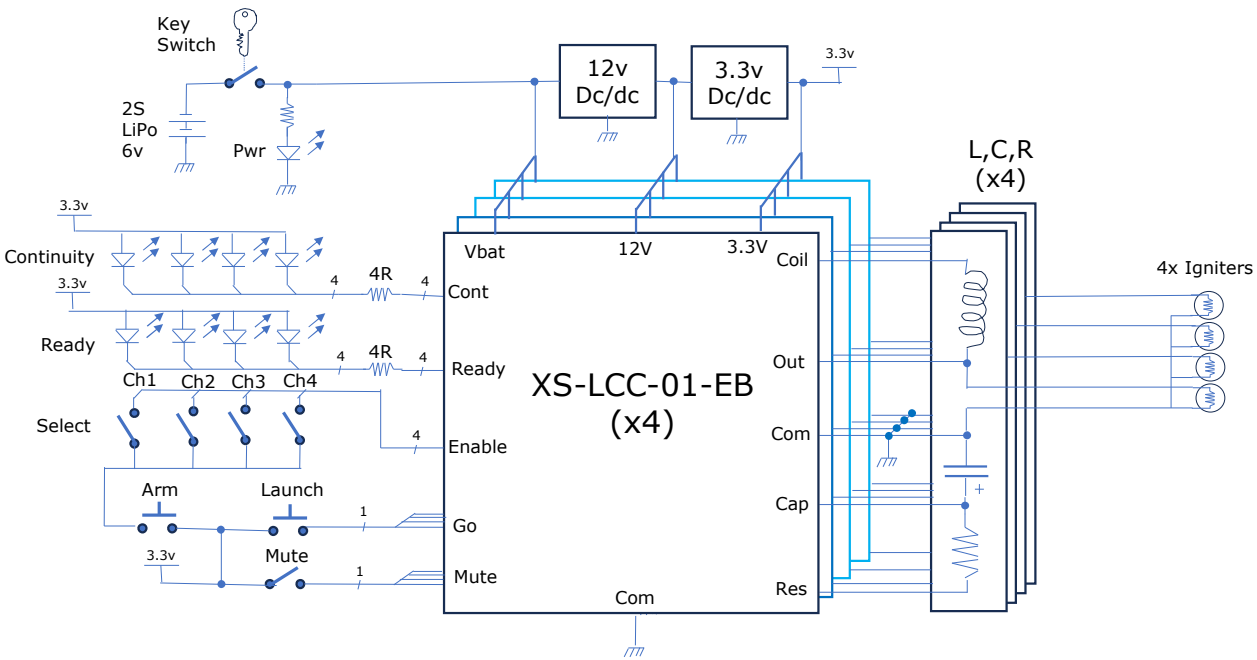

c) 4 channel, selectable, enable initiated arm sequence

©2025 Eric Pearson

Xyzzy Semiconductor

XS-LCC-01 Development Board

XS-LCC-01-DB
Architecture Draft

Launch control chip development board

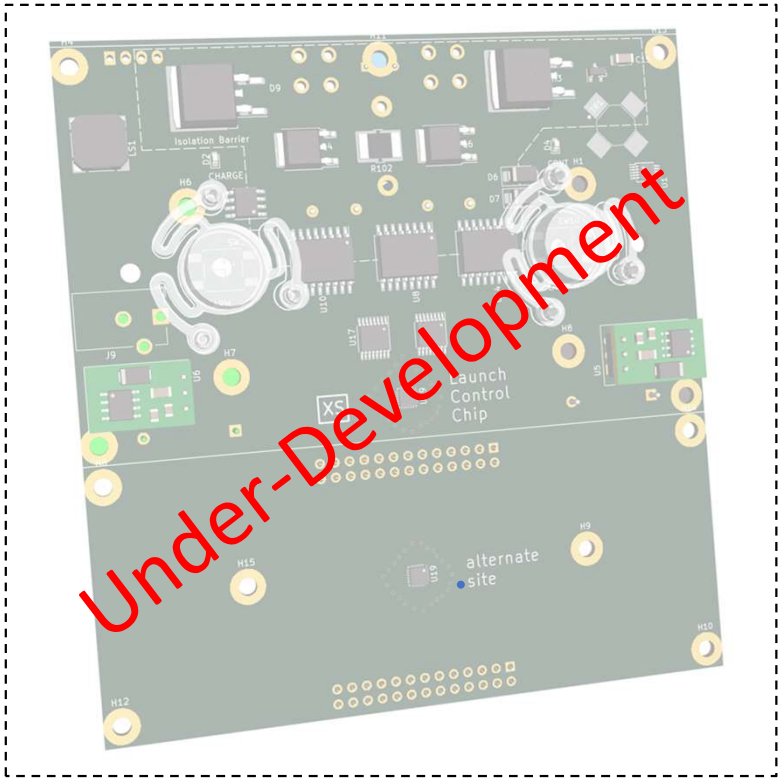

Purpose

- Provides a development platform a handheld launch controller.
- Enable rapid product design customization and performance tuning.
- Basic for ergonomic optimization of both physical and interaction sequencing (touch, lights, sound, launch, abort)
- A functional circuit for observation and optimization of components and core LCC operating parameters (eg batt voltage, current and coil inductances).

Features

- Demonstration handheld launcher in 110mm x 70mm x 30(45)mm
- Features XS-LCC-01 launch control chip with all support circuitry on a PCB
- Cut Away probe board with alternate LCC device land pattern location
- Probe all device pins with GND for each signal
- Example 3D packing of the power components (batt, coil, cap, connector) and interfaces to provide a 10J handheld launcher
- Charge, signal and launch on a 5 count. 5, 4, 3, 2, 1, …
- Topology selected for grounded output and capacitor and simplified wiring.
- Instrumentation amplifiers or input/output voltages and current
- 4x 12-bit SAR analog to digital converters
- 200 uF 400 Volt capacitor with flyback charger
- 390 uH 10 amp toroidal output inductor
- 4xAALi battery solder (2 pairs)
- Discharge (dump) FET driver with discharge-on-power-down safety circuitry.
- 10 Amp power stage FET and freewheel diode
- High side FET driver and isolated power supply.
- Precision 0.005 ohm current sense shunt resistor
- On-board speaker with mute switch located for accessibility externally.
- Arm and launch button integration into the case with 3D push-button frogs
- Arm and continutity LEDs located for use with lite pipes.
- Pcb mounted launch lead connector using ¾” spaced banana jack pair.

©2025 Eric Pearson