REVISION RECORD			
LTR	ECO NO:	APPROVED:	DATE:

map

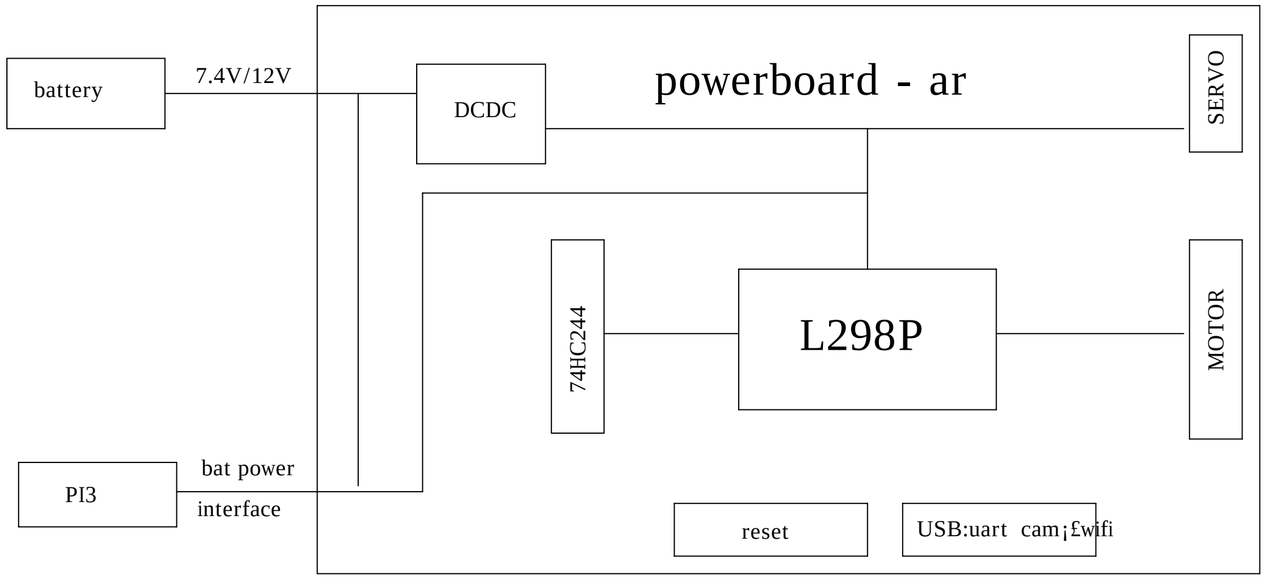

power tree

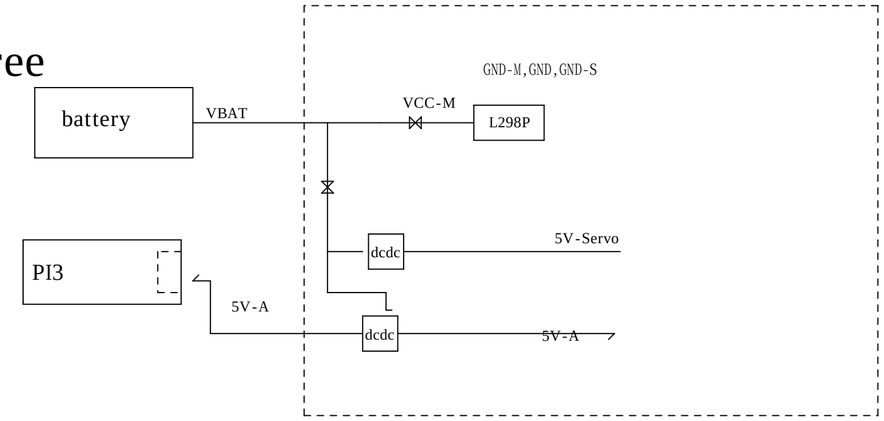

COMPANY: Shenzhen Xiao R Geek Technology Co.,Ltd				
TITLE: PWR.AR				
DRAWN: <Drawn By>	DATED: <Drawn Date>	CODE: <Code>	SIZE: C	DRAWING NO: <Drawing Number> REV: <Revision>
CHECKED: <Checked By>	DATED: <Checked Date>			
QUALITY CONTROL: <QC By>	DATED: <QC Date>			
RELEASED: <Released By>	DATED: <Release Date>	SCALE: <Scale>	SHEET: 1 OF 2	

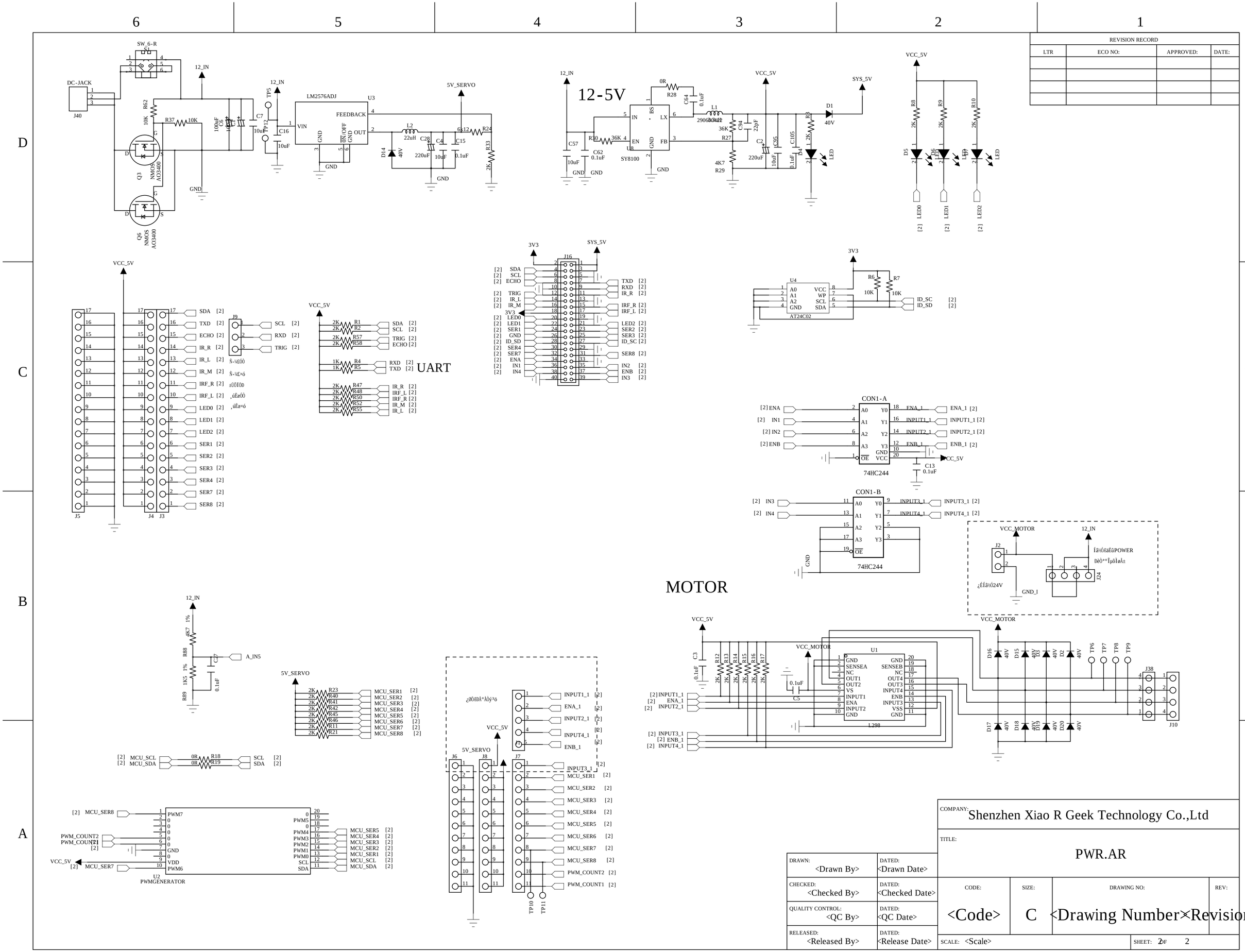

REVISION RECORD			
LTR	ECO NO:	APPROVED:	DATE:

COMPANY:	Shenzhen Xiao R Geek Technology Co.,Ltd
TITLE:	PWR.AR
DRAWN: <Drawn By>	DATED: <Drawn Date>
CHECKED: <Checked By>	DATED: <Checked Date>
QUALITY CONTROL: <QC By>	DATED: <QC Date>
RELEASED: <Released By>	DATED: <Release Date>
CODE: <Code>	SIZE: C
DRAWING NO: <Drawing Number×Revision>	REV:
SCALE: <Scale>	SHEET: 2 OF 2