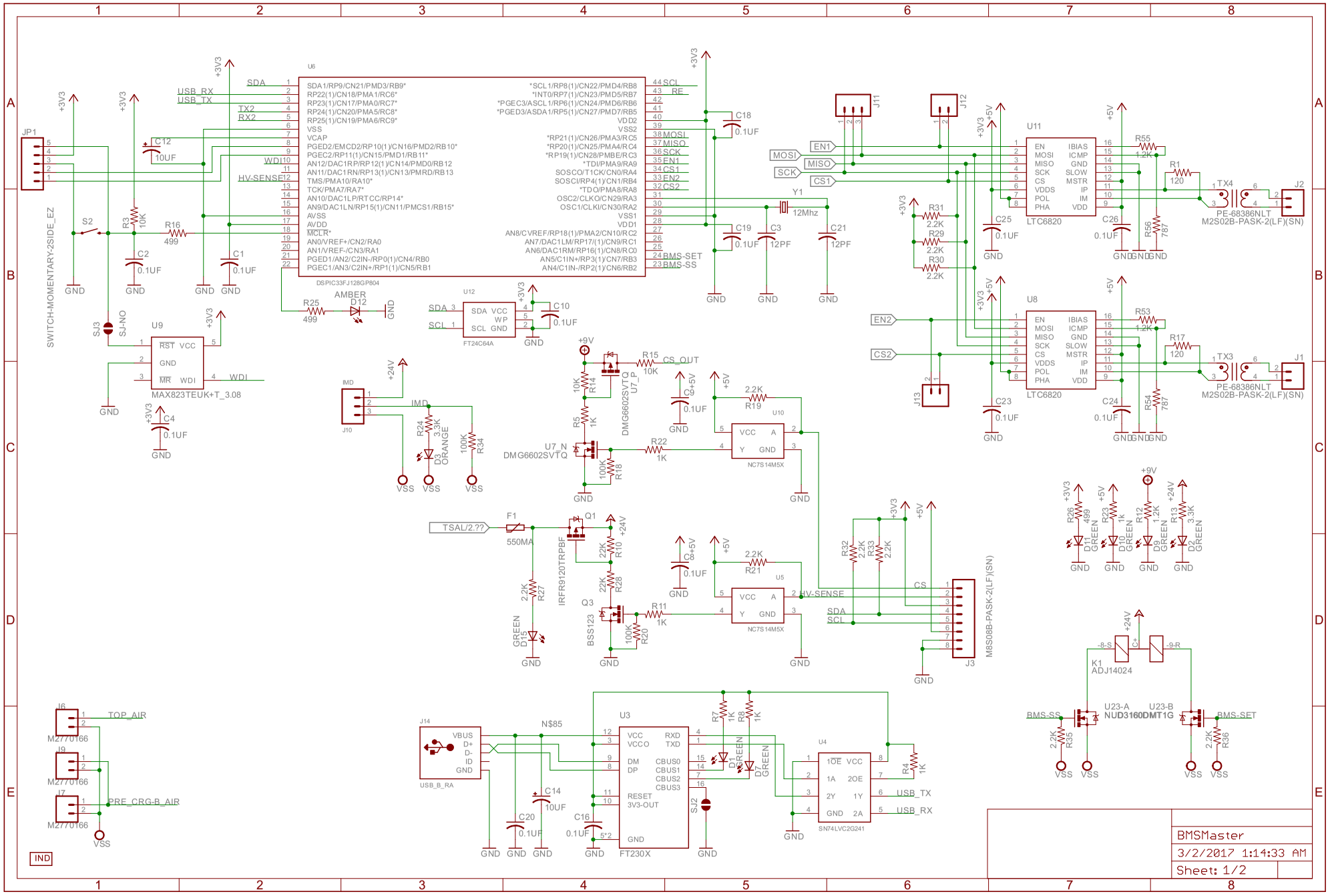
U6
DSPIC33FJ128GP804
SDA1/RP9/CN21/PMD3/RB9*
RP22(1)/CN18/PMA1/RC6*
RP23(1)/CN17/PMA0/RC7*
RP24(1)/CN20/PMA5/RC8*
RP25(1)/CN19/PMA6/RC9*
VSS
VCAP
PGED2/EMCD2/RP10(1)/CN16/PMD2/RB10*
PGEC2/RP11(1)/CN15/PMD1/RB11*
AN12/DAC1RP/RP12(1)/CN14/PMD0/RB12
AN11/DAC1RN/RP13(1)/CN13/PMRD/RB13
TMS/PMA10/RA10*
TCK/PMA7/RA7*
AN10/DAC1LP/RTCC/RP14*
AN9/DAC1LN/RP15(1)/CN11/PMCS1/RB15*
AVSS
AVDD
MCLR*
AN0/VREF+/CN2/RA0
AN1/VREF-/CN3/RA1
PGED1/AN2/C2IN-/RP0(1)/CN4/RB0
PGEC1/AN3/C2IN+/RP1(1)/CN5/RB1
*SCL1/RP8(1)/CN22/PMD4/RB8
*INT0/RP7(1)/CN23/PMD5/RB7
*PGEC3/ASCL1/RP6(1)/CN24/PMD6/RB6
*PGED3/ASDA1/RP5(1)/CN27/PMD7/RB5
VDD2
VSS2
*RP21(1)/CN26/PMA3/RC5
*RP20(1)/CN25/PMA4/RC4
*RP19(1)/CN28/PMBE/RC3
*TDI/PMA9/RA9
SOSCO/T1CK/CN0/RA4
SOSCI/RP4(1)/CN1/RB4
*TDO/PMA8/RA8
OSC2/CLKO/CN29/RA3
OSC1/CLKI/CN30/RA2
VSS1
VDD1
AN8/CVREF/RP18(1)/PMA2/CN10/RC2
AN7/DAC1LM/RP17(1)/CN9/RC1
AN6/DAC1RM/RP16(1)/CN8/RC0
AN5/C1IN+/RP3(1)/CN7/RB3
AN4/C1IN-/RP2(1)/CN6/RB2
SCL
RE
MOSI
MISO
SCK
EN1
CS1
EN2
CS2
BMS-SET
BMS-SS
SDA
WDI
HV-SENSE
TX2
RX2
USB_RX
USB_TX
JP1
SWITCH-MOMENTARY-2SIDE_EZ
S2
R3 10K
R16 499
C2 0.1UF
C1 0.1UF
C12 10UF
SJ3 SJ-NO
U9
MAX823TEUK+T_3.08
RST VCC GND MR WDI
C4 0.1UF
R25 499
AMBER D12
U12
FT24C64A
SDA SCL VCC WP GND
C10 0.1UF
J10
IMD
R24 3.3K
D3 ORANGE
100K R34
VSS
+3V3
+24V
+9V
+5V
GND
C18 0.1UF
C19 0.1UF
C3 12PF
C21 12PF
Y1 12Mhz
J11
J12
J13
U11
LTC6820
EN MOSI MISO SCK CS VDDS POL PHA
IBIAS ICMP GND SLOW MSTR IP IM VDD
R55 1.2K
R1 120
TX4
J2
PE-68386NLT
M2S02B-PASK-2(LF)(SN)
C25 0.1UF
C26 0.1UF
R56 787
R31 2.2K
R29 2.2K
R30 2.2K
U8
LTC6820
R53 1.2K
R17 120
TX3
J1
C23 0.1UF
C24 0.1UF
R54 787
R15 10K
CS_OUT
R14 10K
R5 1K
DMG6602SVTQ
U7_P
U7_N
R22 1K
R18 100K
C9 0.1UF
R19 2.2K
U10
NC7S14M5X
F1 550MA
TSAL/2.??
Q1 IRFR9120TRPBF
R10 22K
R28 22K
Q3 BSS123
R20 100K
R11 1K
C8 0.1UF
R21 2.2K
U5
R27 2.2K
D15 GREEN
R32 2.2K
R33 2.2K
J3
M8S08B-PASK-2(LF)(SN)
R26 499
D11 GREEN
R23 1k
D10 GREEN
R12 1.2K
D9 GREEN
R13 3.3K
D2 GREEN
K1
ADJ14024
-8-S
-9-R
U23-A
U23-B
NUD3160DMT1G
R35 2.2K
R36 2.2K
J6
J9
J7
M2770166
TOP_AIR
PRE_CRG-B_AIR
J14
USB_B_RA
VBUS D+ D- ID GND
N$85
U3
FT230X
VCC VCCO RXD TXD DM DP CBUS0 CBUS1 CBUS2 CBUS3 RESET 3V3-OUT GND
R7 1K
R8 1K
D1 GREEN
D7 GREEN
C14 10UF
C20 0.1UF
C16 0.1UF
SJ2
U4
SN74LVC2G241
OE VCC 1A 2OE 2Y 1Y GND 2A
R4 1K
USB_TX
USB_RX
IND
BMSMaster
3/2/2017 1:14:33 AM
Sheet: 1/2

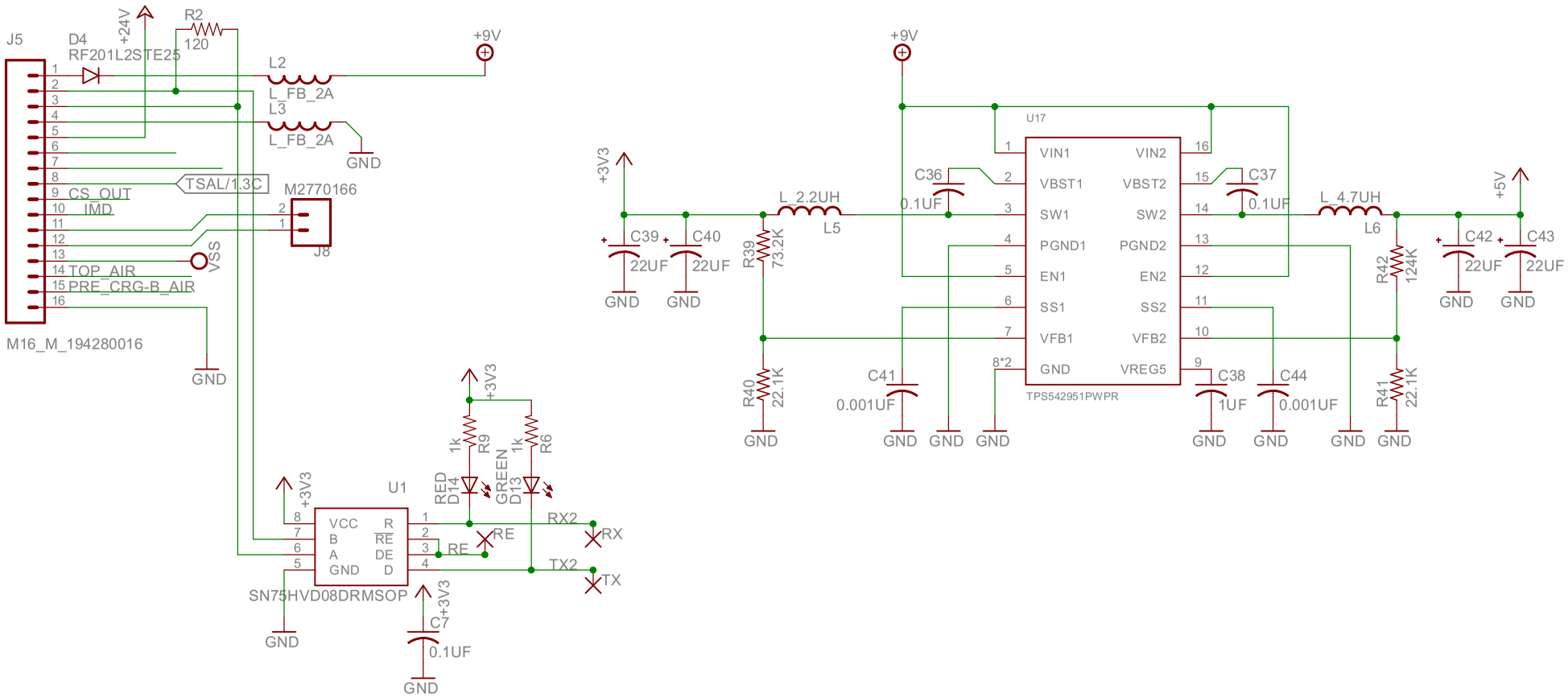
J5
D4
RF201L2STE25
+24V
R2
120
+9V
L2
L_FB_2A
L3
L_FB_2A
GND
TSAL/1.3C
M2770166
J8
CS_OUT
IMD
VSS
TOP_AIR
PRE_CRG-B_AIR
M16_M_194280016
GND
+3V3
U1
VCC
B
A
GND
R
RE
DE
D
SN75HVD08DRMSOP
RED
D14
GREEN
D13
1k
R9
1k
R6
RE
RX2
RX
TX2
TX
C7
0.1UF
GND
+9V
U17
VIN1
VBST1
SW1
PGND1
EN1
SS1
VFB1
GND
VIN2
VBST2
SW2
PGND2
EN2
SS2
VFB2
VREG5
TPS542951PWPR
C36
0.1UF
C37
0.1UF
L_2.2UH
L5
L_4.7UH
L6
+5V
C39
22UF
C40
22UF
R39
73.2K
R40
22.1K
C41
0.001UF
C38
1UF
C44
0.001UF
R42
124K
R41
22.1K
C42
22UF
C43
22UF