Team 10

A	B	C	Sum	Carry
0	0	0	0	0
0	0	1	1	0
0	1	0	1	0
0	1	1	0	1
1	0	0	1	0
1	0	1	0	1
1	1	0	0	1
1	1	1	1	1

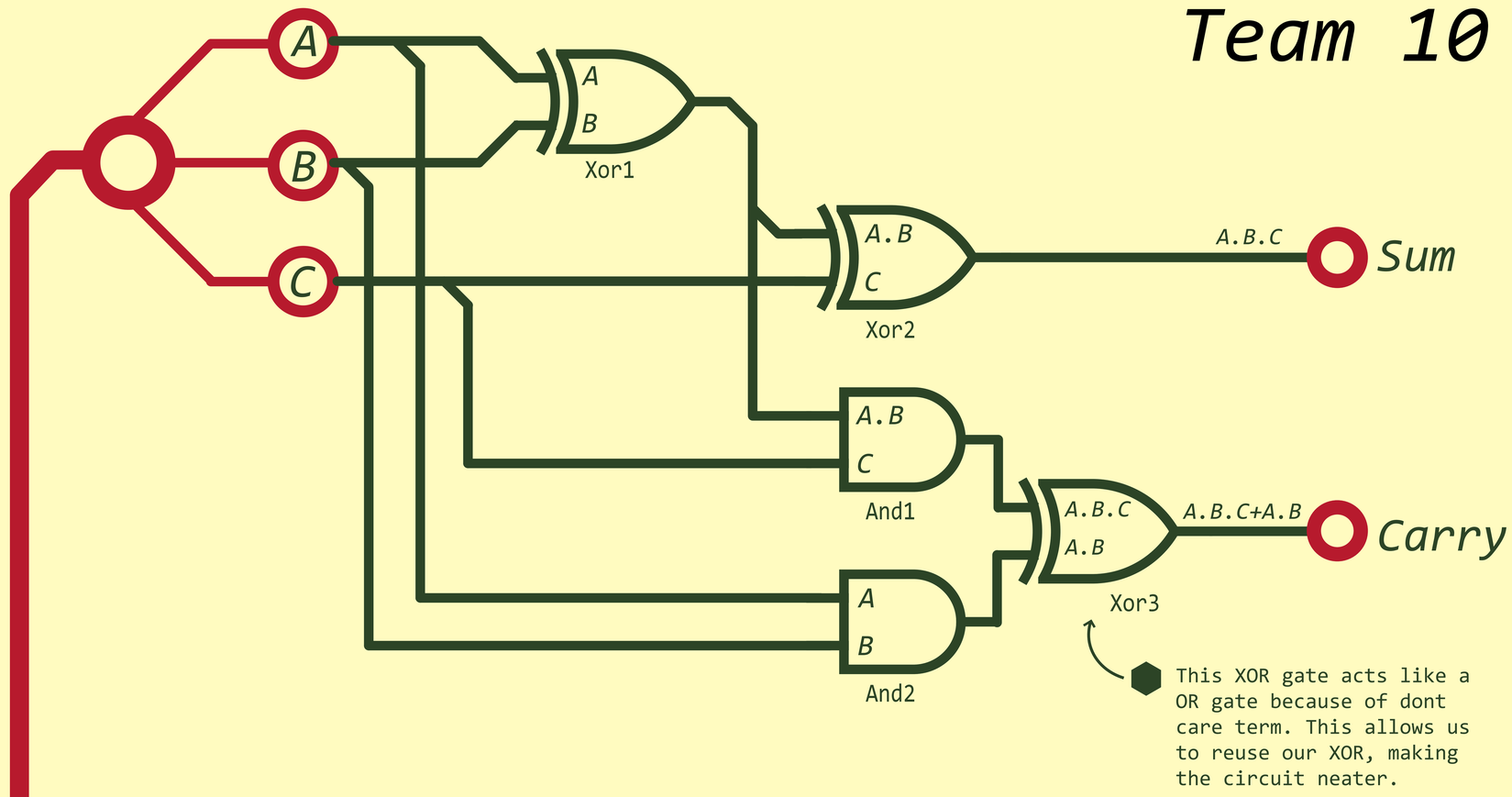

- Truth Table
- Schematics
- Design
- Testing
- Mojo

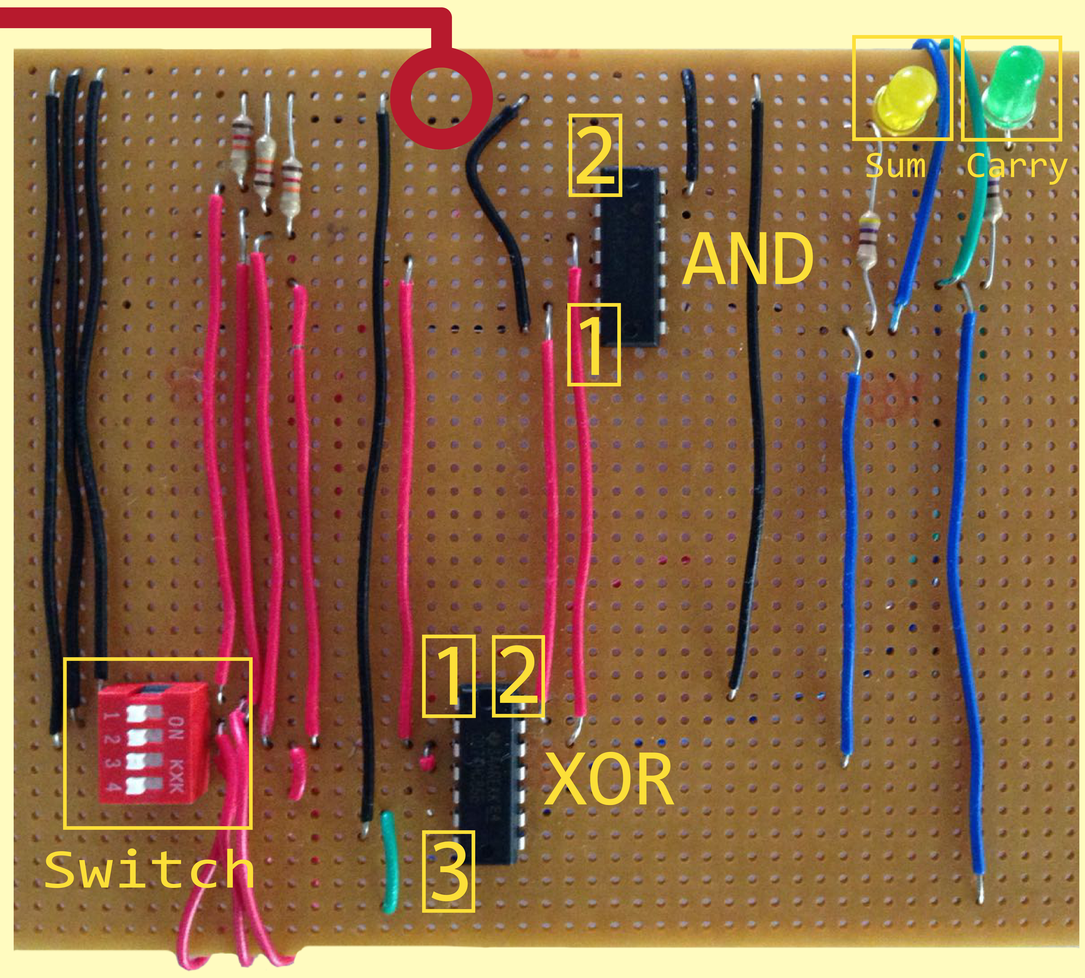

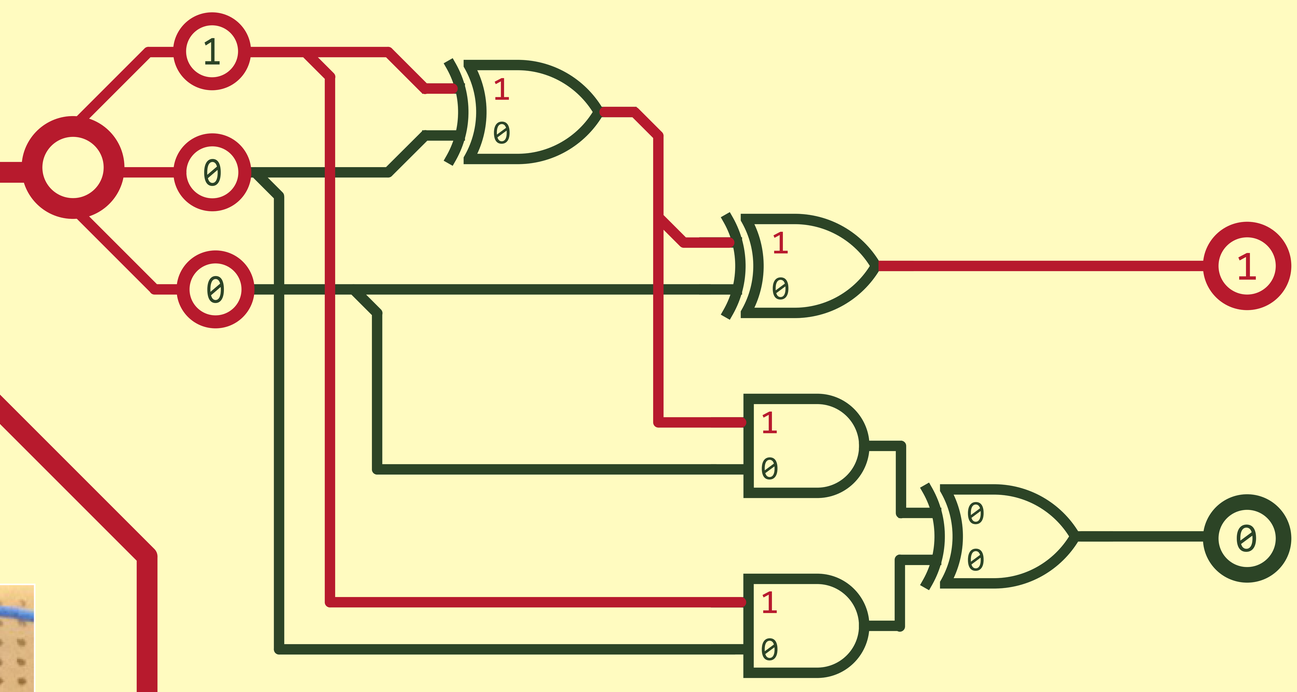

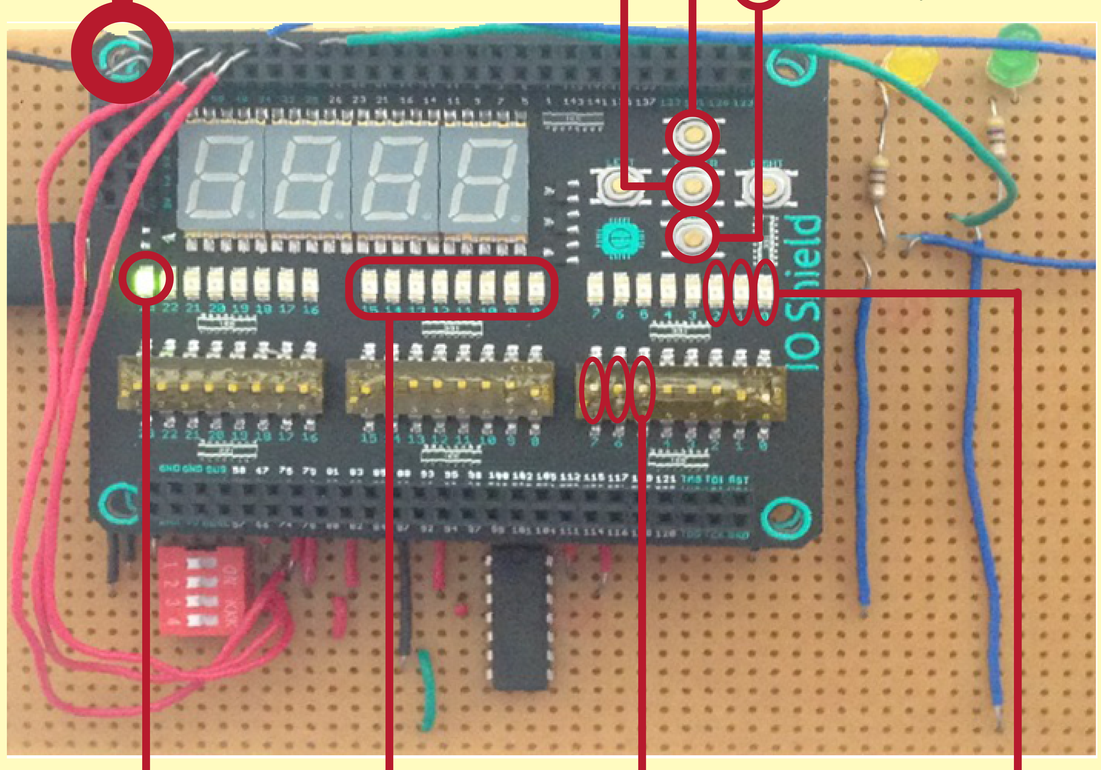
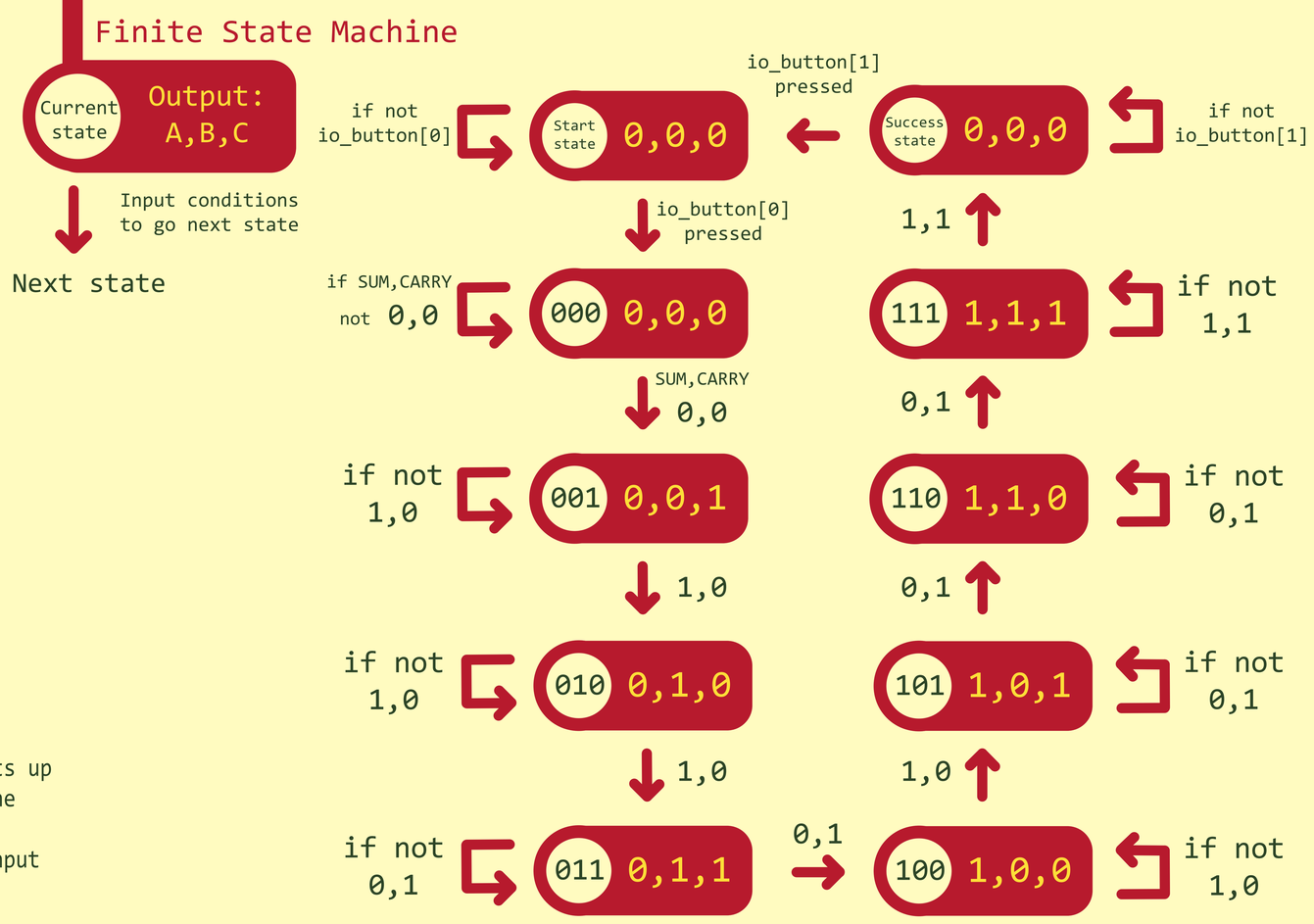
Finite State Machine