WWYK240146
MONITORING & CONTROL SYSTEMS FOR IWCS

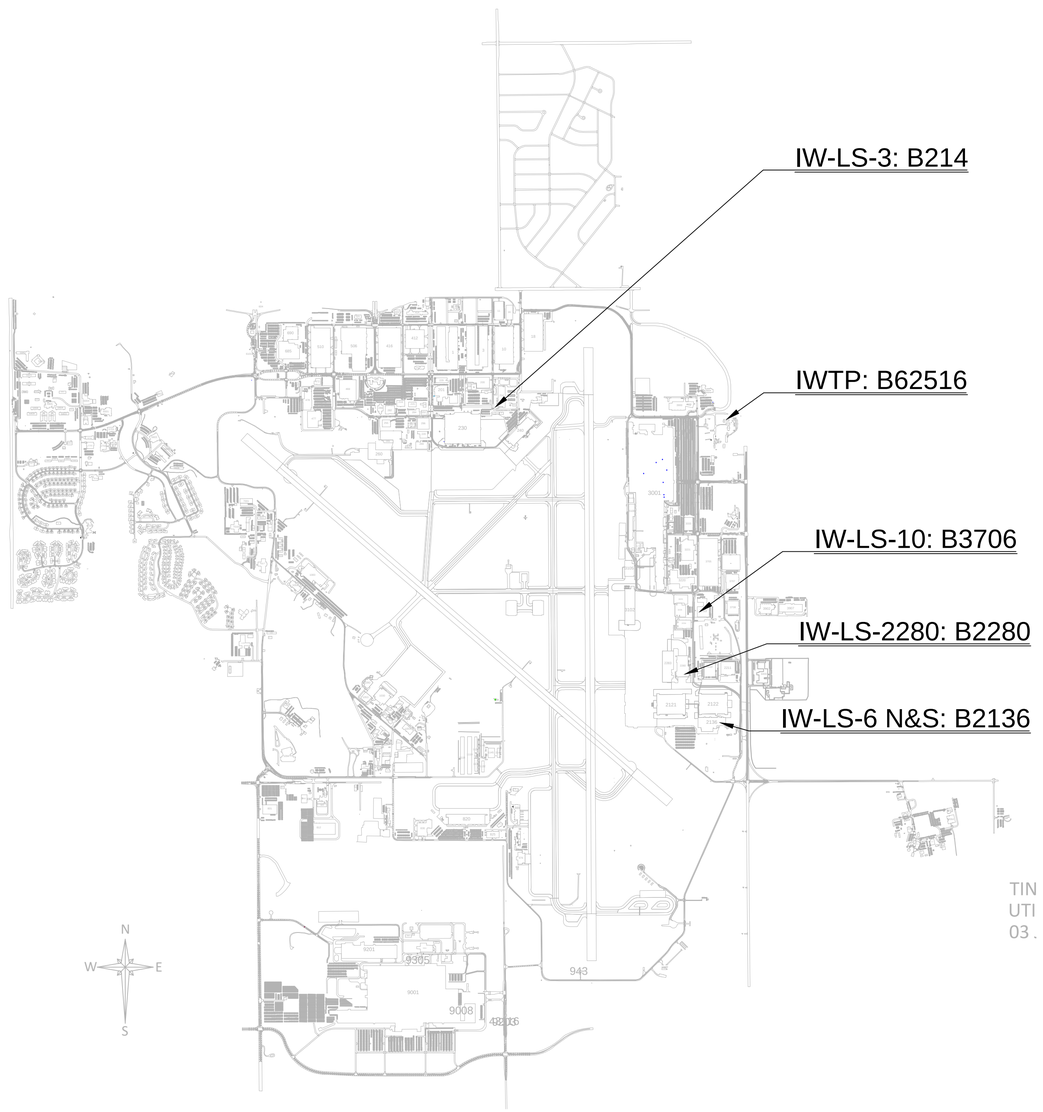

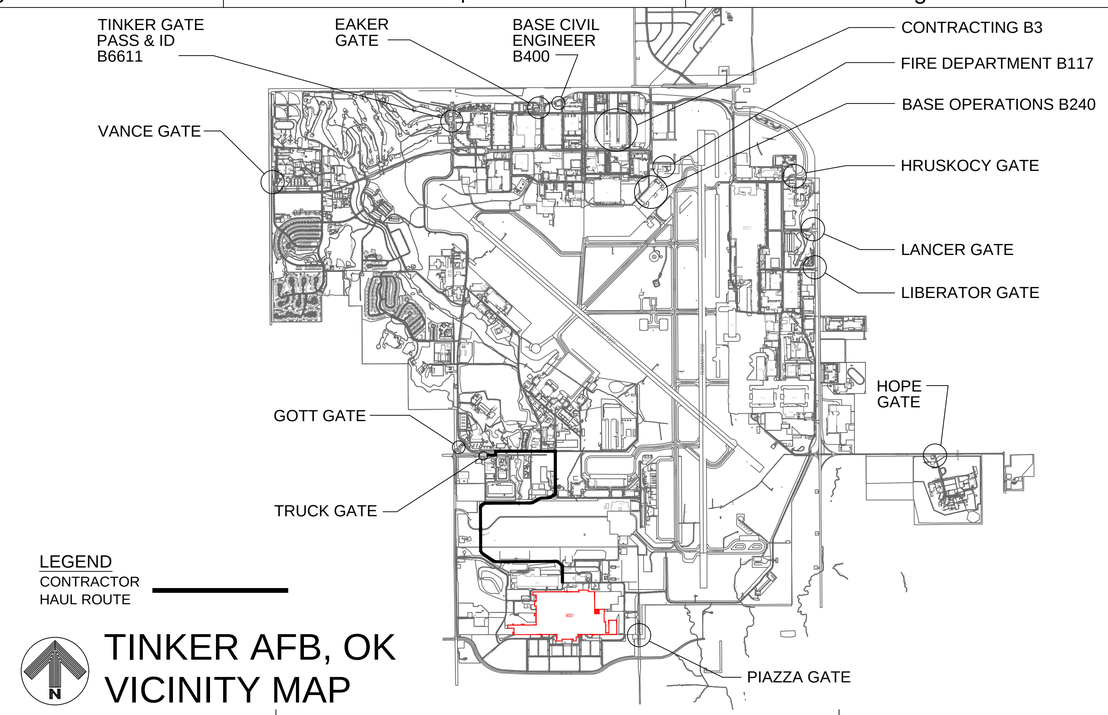

TINKER AFB, OK VICINITY MAP

GENERAL NOTES:

1. BRAND NAMES: REFERENCE TO SPECIFIC BRAND NAMES OR COMPANIES IS FOR THE PURPOSE OF ESTABLISHING MINIMUM QUALITY STANDARDS, IDENTIFICATION AND GUIDANCE AND IS NOT INTENDED TO LIMIT SELECTION OF OTHER MANUFACTURERS THAT ARE EQUAL OR EXCEED THE SPECIFIED ITEMS IN TERMS OF PHYSICAL PROPERTIES, INCLUDING, COLOR RANGE, FINISH, DURABILITY, APPEARANCE, PERFORMANCE CHARACTERISTICS, AND OTHER FACTORS. OTHER PRODUCTS, MATERIALS, COLORS AND SYSTEMS, MAY BE SUBMITTED FOR EVALUATION AND APPROVAL/DISAPPROVAL BY THE CONTRACTING OFFICER.
2. THIS SET OF CONSTRUCTION DOCUMENTS SHALL BE CONSIDERED AS A WHOLE IN THAT THE GENERAL CONTRACTOR AND ALL THE SUB-CONTRACTORS ARE RESPONSIBLE FOR THE INFORMATION PRESENTED ON ALL SHEETS ON THE SET OF DRAWINGS AND ALL SECTIONS OF THE SPECIFICATIONS.
3. THE CONTRACTOR IS RESPONSIBLE FOR ERECTING ALL CONSTRUCTION FENCING AND BARRICADES AS REQUIRED TO PROTECT CONSTRUCTION MATERIAL AND TO PREVENT ANY UNAUTHORIZED PERSONNEL FROM ENTERING THE CONSTRUCTION SITE.
4. ANY DAMAGE TO THE EXISTING GROUNDS OR FACILITIES CAUSED BY CONSTRUCTION TRAFFIC OR ANY CONSTRUCTION OPERATION SHALL BE REPAIRED OR REPLACED BY THE CONTRACTOR TO MATCH OR EXCEED EXISTING CONDITIONS AT NO ADDITIONAL COST TO THE GOVERNMENT.
5. ALL WORK NOTED & LOCATED IN THESE DOCS SHALL BE UNDERSTOOD BY THE CONTRACTOR TO REQUIRE ALL NEW LABOR & MATERIALS UNLESS SPECIFICALLY NOTED TO BE "EXISTING" OR "BY OTHERS".

PROJECT DRAWING INDEX

SEQ.	SHT.	SHEET TITLE
		GENERAL
1	G-001	GENERAL NOTES & VICINITY MAP
2	G-002	GENERAL SYMBOLS,LEGENDS & ABBREVIATIONS
3	G-101	LIFT STATION LOCATIONS
4	G-102	NETWORK OVERVIEW
		CIVIL
5	C-001	CIVIL GENERAL NOTES AND LEGEND
6	C-100	CIVIL OVERALL SITE PLAN
7	C-101	CIVIL SITE PLAN IW-LS-3
8	C-102	CIVIL SITE PLAN IW-LS-10
9	C-103	CIVIL SITE PLAN IW-LS-2280
10	C-104	CIVIL SITE PLAN IW-LS-6
11	C-501	CIVIL DETAILS
12	C-502	CIVIL CONCRETE VAULT DETAILS
		STRUCTURAL
13	S-001	GENERAL NOTES
		CONTROLS
14	YD101	INSTRUMENTATION DEMO DETAILS IW-LS-3
15	YD102	INSTRUMENTATION DEMO DETAILS IW-LS-10
16	YD103	INSTRUMENTATION DEMO DETAILS IW-LS-2280
17	YD104	INSTRUMENTATION DEMO DETAILS IW-LS-6
18	Y-101	INSTRUMENTATION SITE PLAN IW-LS-3
19	Y-102	INSTRUMENTATION SITE PLAN IW-LS-10
20	Y-103	INSTRUMENTATION SITE PLAN IW-LS-2280
21	Y-104	INSTRUMENTATION SITE PLAN IW-LS-6
22	Y-201	INSTRUMENTATION INTERIOR ROUTING PLAN IW-LS-3
23	Y-202	INSTRUMENTATION INTERIOR ROUTING PLAN IW-LS-10
24	Y-203	INSTRUMENTATION INTERIOR ROUTING PLAN IW-LS-2280
25	Y-204	INSTRUMENTATION INTERIOR ROUTING PLAN IW-LS-6
26	Y-301	INSTRUMENTATION SUMP PUMP DETAIL IW-LS-3
27	Y-302	INSTRUMENTATION SUMP PUMP DETAIL IW-LS-10
28	Y-303	INSTRUMENTATION SUMP PUMP DETAIL IW-LS-2280
29	Y-304N	INSTRUMENTATION NORTH SUMP PUMP DETAIL IW-LS-6
30	Y-304S	INSTRUMENTATION SOUTH SUMP PUMP DETAIL IW-LS-6
		ELECTRICAL
31	E-100	ELECTRICAL OVERALL SITE PLAN

SIGNATURES

CORROSION ENGINEER: (CECE)	DATE:
CE OPERATIONS: (CECO)	DATE:
ZONE MANAGER:	DATE:
CONSTRUCTION MANAGEMENT: (CECE)	DATE:
FIRE DEPARTMENT: (CEFT)	DATE:
SAFETY:	DATE:
INDUSTRIAL HYGIENE:	DATE:
ENVIRONMENTAL:	DATE:
ASBESTOS EVALUATION:	DATE:
COMMUNICATIONS: (COMM)	DATE:
USING AGENCY:	DATE:
REVIEWED BY:	DATE:
REVIEWED BY:	DATE:
DESIGN MANAGER: (CECE)	DATE:
CHIEF DESIGN BRANCH: (CECE)	DATE:
CHIEF ENGINEER DIR: (CECE)	DATE:
BASE CIVIL ENGINEER: (CE)	DATE:

AFMC
AIR FORCE MATERIEL COMMAND
72 ABW CIVIL ENGINEER DIRECTORATE
TINKER AFB, OK

PROJECT INFORMATION
WWYK240146
DESIGN & IMPLEMENT MONITORING
& CONTROL SYSTEM FOR IWCS, B62516
TINKER AIR FORCE BASE, OKLAHOMA

REVISIONS

MARK	DATE	DESCRIPTION

MANAGEMENT INFORMATION
ISSUE DATE:11/05/2025
DESIGN GROUP: HDR
DESIGNED BY:JBG
DRAWN BY:JBG
CHECKED BY:JBG
DESIGN FILE LOCATION:

SHEET TITLE
GENERAL NOTES
AND
VICINITY MAP

SHEET NUMBER
G-001

DRAWING ABBREVIATIONS

A ----------
A LABEL CLASS A DOOR
A/C AIR CONDITION
A/C UNIT AIR CONDITIONING UNIT
A/E ARCHITECT/ENGINEER
AB ANCHOR BOLT
ACC ACCESSIBLE
ACS AUTOMATIC CONTROL SYSTEM
ACS DR ACCESS DOOR
ACS PNL ACCESS PANEL
ACT ACOUSTICAL CEILING TILE
ADA AMERICANS WITH DISABILITIES ACT
ADMIN ADMINISTRATION
AFC ABOVE FINISHED COUNTER
AFF ABOVE FINISHED FLOOR
AFG ABOVE FINISHED GRADE
AFS ABOVE FINISHED SLAB
AGGR AGGREGATE
AHU AIR HANDLING UNIT
AIB AIR INFILTRATION BARRIER
ALT ALTERNATE
ALUM ALUMINUM
ANOD ANODIZE
APC ACOUSTICAL PANEL CEILING
APPROX APPROXIMATE
AR AS REQUIRED
ARCH ARCHITECT
ASC ABOVE SUSPENDED CEILING
ASSY ASSEMBLY
ATC ACOUSTICAL TILE CEILING
AVG AVERAGE
AW ARCHITECTURAL WOODWORK
AWT ACOUSTICAL WALL TREATMENT

B ----------
B LABEL CLASS B DOOR
BALC BALCONY
BB BASEBOARD
BC BOOKCASE
BD BOARD
BDRY BOUNDARY
BFF BELOW FINISH FLOOR
BHMA BUILDER'S HARDWARE MANUFACTURER'S ASSOCIATION
BLDG BUILDING
BLKG BLOCKING
BLT IN BUILT-IN
BN BULLNOSE
BOS BOTTOM OF STEEL
BOT BOTTOM
BP BUILDING PAPER
BRKT BRACKET
BSMT BASEMENT
BTWN BETWEEN
BUR BUILT-UP ROOFING

C ----------
C CONC CAST CONCRETE
C LABEL CLASS C DOOR
CAB CABINET
CATW CATWALK
CAV CAVITY
CBB CEMENTITIOUS (BACKER) BOARD
CD CONSTRUCTION DOCUMENTS
CDW CHILLED DRINKING WATER
CEM PLAS CEMENT PLASTER
CER CERAMIC
CF CONTRACTOR FURNISHED
CF/CI CONTRACTOR FURNISHED/CONTRACTOR INSTALLED
CFE CONTRACTOR FURNISHED EQUIPMENT
CFLG COUNTERFLASHING
CFM CUBIC FEET PER MINUTE
CFMF COLD-FORMED METAL FRAMING
CFS CUBIC FEET PER SECOND
CG CORNER GUARD
CI CAST IRON
CIP CAST-IN-PLACE
CJ CONTROL JOINT
CL CENTER LINE
CLG CEILING
CLG DIFF CEILING DIFFUSER
CLG HT CEILING HEIGHT
CLL COLUMN LINE
CLC CLOSET
CLR COLOR
CLRM CLASSROOM
CMU CONCRETE MASONRY UNIT
CNDS CONDENSATE
CDR CARD READER
CO CLEANOUT
COL COLUMN
COMM COMMUNICATION
CONC CONCRETE
CONC FLR CONCRETE FLOOR
CONF CONFERENCE
CONT CONTINUE
COORD COORDINATE
CORR CORRIDOR
CP CONCRETE PIPE
CPT CARPET
CR CONTROL ROOM
CS CAST STONE
CSWK CASEWORK
CT CERAMIC TILE
CTB CERAMIC TILE BASE
CTF CERAMIC TILE FLOOR
CTR CENTER
CU FT CUBIC FEET
CW CASEMENT WINDOW

D ----------
D DEPTH
D LABEL CLASS D DOOR
DBL DOUBLE
DEMO DEMOLITION
DEPT DEPARTMENT
DET DETAIL
DIA DIAMETER
DIR DIRECTION
DIST DISTANCE
DOC DOCUMENT
DR DOOR
DS DOWNSPOUT

E ----------
E LABEL CLASS E DOOR
EA EACH
EF EACH FACE
EIFS EXTERIOR INSULATION AND FINISH SYSTEM
EJ EXPANSION JOINT
ES EACH SIDE
EL ELEVATION
ELEV ELEVATOR
ENTR ENTRANCE
EPS EXPANDED POLYSTYRENE BOARD (INSULATION)
EQ EQUAL
EWC ELECTRIC WATER COOLER
EXP EXPOSED
EXT EXTERIOR
EXT EXTINGUISHER
EXT GR EXTERIOR GRADE

F ----------
FA FIRE ALARM
FAAP FIRE ALARM ANNUNCIATOR PANEL
FAS BD FASCIA BOARD
FC BRK FACE BRICK
FCO FLOOR CLEANOUT
FD FLOOR DRAIN
FDTN FOUNDATION
FE FIRE EXTINGUISHER
FEC FIRE EXTINGUISHER CABINET
FED FEDERAL
FF FINISH FACE
FF EL FINISH FLOOR ELEVATION
FF INSUL FOIL BACKED INSULATION
FGL FIBERGLASS
FH FIRE HOSE
FHP FULL HEIGHT PARTITION
FIN FINISH
FIN BS FINISH BOTH SIDES
FIN FLR FINISH FLOOR
FIN GR FINISH GRADE
FIXT FIXTURE
FLDG FOLDING
FLEX FLEXIBLE
FLG FLOORING
FLMT FLUSH MOUNT
FLR FLOOR
FM FACTORY MUTUAL
FOC FACE OF CONCRETE
FOM FACE OF MASONRY
FR FIRE RESISTANT
FRG FIBER REINFORCED GYPSUM
FRMG FRAMING
FRP FIBERGLASS REINFORCED PLASTIC
FRTW FIRE RETARDANT TREATED WOOD
FS FEDERAL SPECIFICATION
FSTNR FASTENER
FT FEET
FTG FOOTING
FWC FABRIC WALLCOVERING

G ----------
G NATURAL GAS
GALV GALVANIZED
GB GRAB BAR
GFCI GOVERNMENT FURNISHED CONTRACTOR INSTALLED
GFGI GOVERNMENT INSTALLED GOVERNMENT INSTALLED
GFRG GLASS-FIBER-REINFORCED GYPSUM
GLZ GLAZING
GR FL GROUND FLOOR
GUT GUTTER
GYP BD GYPSUM BOARD
GYP PLAS GYPSUM PLASTER

H ----------
HB HOSE BIBB
HDPE HIGH DENSITY POLYETHYLENE
HDW HARDWARE
HDWD HARDWOOD
HEPA HIGH EFFICIENCY PARTICULATE AIR (FILTER)
HM HOLLOW METAL
HMD HOLLOW METAL DOOR
HORIZ HORIZONTAL
HT HEIGHT
HYDR HYDRAULIC

I ----------
IBC INTERNATIONAL BUILDING CODE
INSUL INSULATION
INT INTERIOR
ILO IN LIEU OF

J ----------
JAN JANITOR

K ----------
KPD KEYPAD
KIT KITCHEN
KPL KICKPLATE

L ----------
LAM LAMINATE
LAV LAVATORY
LBR LUMBER
LBS POUND
LDG LANDING
LF LINEAR FEET (FOOT)
LIB LIBRARY
LIN LINEAR
LKR LOCKER
LOC LOCATION
LT LIGHT
LVDR LOUVER DOOR
LVR LOUVER

M ----------
MACH RM MACHINE ROOM
MATL MATERIAL
MAX MAXIMUM
MC MOISTURE CONTENT
MD METAL DECK
MECH MECHANICAL
MECH RM MECHANICAL ROOM
MEMB MEMBRANE
MF MILL FINISH
MFR MANUFACTURER
MID MIDDLE
MIL STD MILITARY STANDARD
MIN MINIMUM, MINUTE
MIRR MIRROR
MISC MISCELLANEOUS
MLDG MOLDING (MOULDING)
MO MASONRY OPENING
MOD MODIFY
MB MOISTURE BARRIER
MTG MOUNTING
MTL METAL
MVBL MOVABLE
MWP MEMBRANE WATERPROOFING

N ----------
N NORTH
NA NOT APPLICABLE
NFPA NATIONAL FIRE PROTECTION ASSOCIATION
NIC NOT IN CONTRACT
NO NUMBER
NOM NOMINAL
NP NO PAINT
NRC NOISE REDUCTI

O ----------
OA OVERALL
OC ON CENTER
OD OUTSIDE DIAMETER
OFD OVERFLOW DRAIN
OFF OFFICE
OGL OBSCURE GLASS
OPH OPPOSITE HAND
OPNG OPENING
OPP OPPOSITE
OPQ OPAQUE
OWSJ OPEN WEB STEEL JOIST
OPR OPERABLE
ORD OVERFLOW ROOF DRAIN
ORIG ORIGINAL

P ----------
PA PUBLIC ADDRESS
PAR PARAPET
PAT PATTERN
PB PULL BOX
PBD PARTICLEBOARD
PCC PRECAST CONCRETE
PCF POUNDS PER CUBIC FOOT
PCT PERCENT
PERF PERFORATED
PERIM PERIMETER
PH PHASE
PIL PILASTER
PL PROPERTY LINE
PL GL PLATE GLASS
PLAM PLASTIC LAMINATE
PLAS PLASTER
PLBG PLUMBING
PLG PILING
PLYWD PLYWOOD
PNL PANEL
PP PL PUSH/PULL PLATE
PR PAIR
PRCST PRECAST
PRKG PARKING
PS CONC PRESTRESSED CONCRETE
PSF POUNDS PER SQUARE FOOT
PSI POUNDS PER SQUARE INCH
PT PRESSURE TREATED
PTD PAPER TOWEL DISPENSER
PTDR PAPER TOWEL DISPENSER AND RECEPTACLE
PTN PARTITION
PWR POWER

Q ----------
QT QUARRY TILE
QTY QUANTITY

R ----------
RB RESILIENT BASE
RBM REINFORCED BRICK MASONRY
RBR RUBBER
RC REINFORCED CONCRETE
RCP REFLECTED CEILING PLAN
RD ROOF DRAIN
RDG INS RIGID INSULATION, SOLID
REC RECESSED
REC ROOM RECREATION ROOM
REF REFERENCE
REM REMOVABLE
REP REPAIR
REPL REPLACE
REQ REQUIRE
REQD REQUIRED
RESIL RESILIENT
REST RESTROOM
RF RESILIENT FLOORING
RFG ROOFING
RH ROOF HATCH
RHR RIGHT HAND REVERSE
RL ROOF LEADER
RLG RAILING
RM ROOM
RO ROUGH OPENING
RSD ROLLING STEEL DOOR
RV ROOF VENT
RVL REVEAL

S ----------
SB SPLASH BLOCK
SCHED SCHEDULE
SD SMOKE DETECTOR
SF SQUARE FOOT (FEET)
SFTWD SOFTWOOD
SGL SINGLE
SHT MTL FLASH (FLASHING) SHEET METAL
SHTHG SHEATHING
SHV SHELVING
SIM SIMILAR
SJ SCORED JOINT
SKLT SKYLIGHT
SLNT SEALANT
SMK SMOKE
SMLS SEAMLESS
SP EL SPOT ELEVATION
SPEC SPECIFICATION
SQ SQUARE
SQ IN SQUARE INCH
SQ YD SQUARE YARD
SST STAINLESS STEEL
ST STAIRS
STD STANDARD
STL JST STEEL JOIST
STL RF DK STEEL ROOF DECK
STOR STORAGE
STR STRINGERS
STRB/HRN STROBE/HORN
SUB FL SUBFLOOR
SV SHEET VINYL
SW SIDEWALK

T ----------
T TREAD
T/S TUB/SHOWER
TC TERRA COTTA
TD TRENCH DRAIN
TEL TELEPHONE
TEMP TEMPORARY
TER TERRAZZO
TFF TOP OF FINISH FLOOR
THK THICKNESS
TK BD TACKBOARD
TMPD GL TEMPERED GLASS
TN TRUE NORTH
TOF TOP OF FOOTING
TOM TOP OF MASONRY
TOP TOP OF PARAPET
TOPO TOPOGRAPHY
TOS TOP OF SLAB
TRANS TRANSOM
TRTD TREATED
TV TELEVISION

INDEX OF DRAWINGS

NUMBERING SYSTEM:

DISCIPLINE:
C - CIVIL
L - LANDSCAPE
A - ARCHITECTURE
M - MECHANICAL
E - ELECTRICAL
P - PLUMBING
S - STRUCTURAL
K - FOOD SERVICE

DISCIPLINE MODIFIER

SHEET NUMBER WITHIN SERIES

XX100

REFER TO A/E/C CAD STANDARD FOR SHEET NUMBERINGSTANDARDS

ANNOTATION CALLOUTS/DRAWING SYMBOLS

INTERIOR ELEVATION
SHEET NUMBER
ELEVATION NUMBER
EXTERIOR ELEVATION
SHEET NUMBER
SECTION
SHEET NUMBER
ENLARGEMENT, DETAIL
SHEET NUMBER
REVISION TAG
NORTH ARROW
ROOM TAG
SPOT ELEVATION
LEVEL NAME
SHEET KEYNOTE

DRAWING SYMBOLS

NORTH ARROW

CORRIDOR 3 — ROOM NAME, ROOM NUMBER

X — EXISTING COLUMN GRID DESIGNATOR

DETAIL NUMBER

XX / X-XXX — SHEET NUMBER DETAIL IS DRAWN ON

TITLE

XX / X-XXX — XXXXXXXX, SCALE:

XX / X-XXX — ARCHITECTURAL ELEVATIONS EXTERIOR

XX / X-XXX — ARCHITECTURAL ELEVATIONS INTERIOR

XX / X-XXX — ARCHITECTURAL DETAIL

X — KEYNOTE

X — PARTITION TYPE REF A-601

X — REVISION DELTA

FINISH FLOOR ELEVATION
EL. = 100 - '0"

DRAWING LEGEND

GRID LINE

EXISTING TO REMAIN

EXISTING TO BE REMOVED

EXISTING TO REMAIN

NEW CONSTRUCTION

1'-0" — DIMENSION LINE (PLAN, SECTION, DETAIL OR ELEVATION)

A101 — DOOR NUMBER (MATCHES ROOM NUMBER, WITH LETTER SUFFIX FOR MULTIPLE DOORS)

GENERAL NOTES

1. ALL CONSTRUCTION SHALL BE IN ACCORDANCE WITH APPLICABLE UNIFIED FACILITY CRITERIA, INTERNATIONAL (IBC) BUILDING CODE REQUIREMENTS, & TINKER AIR FORCE BASE STANDARDS.

2. THE CONTRACTOR SHALL CHECK ALL CONTRACT DOCUMENTS, FIELD CONDITIONS, AND DIMENSIONS FOR ACCURACY AS SHOWN BEFORE PROCEEDING WITH THE CONSTRUCTION. IF THERE ARE ANY QUESTIONS, THE CONTRACTOR SHALL OBTAIN A CLARIFICATION FROM THE ARCHITECT BEFORE PROCEEDING WITH THE WORK IN QUESTION OR RELATED WORK.

3. DRAWINGS SHALL NOT BE SCALED. WRITTEN DIMENSIONS SHALL ALWAYS GOVERN. CONTRACTOR REQUIRING DIMENSIONS NOT NOTED, SHALL CONTACT THE ARCHITECT FOR SUCH INFORMATION PRIOR TO PROCEEDING WITH WORK RELATED TO THOSE DIMENSIONS.

4. LARGE SCALE DRAWINGS TAKE PRECEDENCE OVER SMALL SCALE, DETAILS TAKE PRECEDENCE OVER ALL. CONTRACTOR SHALL NOTIFY ARCHITECT OF CONFLICTS IN WRITING, PRIOR TO PROCEEDING WITH THE WORK IN QUESTION.

5. DETAILS ARE USUALLY KEYED ONLY ONCE (ON THE PLANS OR ELEVATIONS WHEN THEY FIRST OCCUR) AND ARE TYPICAL FOR SIMILAR CONDITIONS THROUGHOUT UNLESS OTHERWISE NOTED.

6. "TYPICAL" OR "TYP." MEANS THAT THE CONDITION IS REPRESENTATIVE FOR ALL SIMILAR CONDITIONS, UNLESS OTHERWISE NOTED. "SIMILAR" OR "SIM." MEANS COMPARABLE CHARACTERISTICS FOR THE CONDITIONS NOTED. VERIFY DIMENSIONS AND ORIENTATION ON PLANS AND ELEVATIONS. "ALIGN" AS USED IN THESE DOCUMENTS MEANS TO ACCURATELY LOCATE FINISHES IN THE SAME PLANE.

7. "AS REQUIRED" MEANS AS REQUIRED BY REGULATORY REQUIREMENTS, BY REFERENCED STANDARDS, BY EXISTING CONDITIONS, BY GENERALLY ACCEPTED CONSTRUCTION PRACTICE OR BY THE CONTRACT DOCUMENTS.

8. ALL DIMENSIONS GIVEN AS CLEAR ARE NOT ADJUSTABLE WITHOUT ARCHITECT/ENGINEER'S APPROVAL.

9. DIMENSIONS ARE TO FACE OF FINISHED WALL UNLESS OTHERWISE NOTED.

10. CONTRACTOR SHALL PROVIDE ALL NECESSARY BLOCKING, BACKING, FRAMING HANGERS OR OTHER SUPPORTS FOR ALL FIXTURES, EQUIPMENT, CABINETRY, FURNISHINGS AND ALL OTHER ITEMS REQUIRING SAME.

11. THE CONTRACTOR SHALL BE RESPONSIBLE FOR ALL CUTTING AND PATCHING REQUIRED FOR PROPER INSTALLATION OF MATERIAL AND EQUIPMENT. PROVIDE DEMOLITION AND PATCH/REPAIR IN ALL AREAS (WHETHER SPECIFICALLY SHOWN OR NOT) TO ACCOMMODATE ALL WORK INCLUDING MECHANICAL, ELECTRICAL, PLUMBING, FIRE PROTECTION.

12. CONTRACTOR SHALL PROTECT, PATCH AND REFINISH TO MATCH EXISTING AREAS TO REMAIN AND AREAS DISTURBED BY NEW CONSTRUCTION, U.O.N.

13. ALL PIPE CONDUIT AND DUCT PENETRATIONS THROUGH FLOORS AND FIRE-RATED WALLS AND CEILINGS SHALL BE SEALED WITH A UL LISTED ASSEMBLY SUCH THAT FIRE RATINGS ARE MAINTAINED.

14. THERE WILL BE ADJACENT AREAS OF THE BUILDING THAT MUST REMAIN OPERATIONAL DURING THE COURSE OF THIS PROJECT. ACCESS TO CEILING AREAS AND SHUT DOWNS OF SERVICES ARE REQUIRED TO BE COORDINATED WITH THE OWNERS REPRESENTATIVE.

15. IT IS THE SUBCONTRACTOR'S RESPONSIBILITY TO VERIFY ALL EXISTING CONDITIONS AND QUANTITIES FOR THEIR RESPECTIVE TRADES PRIOR TO SUBMITTING PRICING TO THE GENERAL CONTRACTOR. THIS INCLUDES BUT IS NOT LIMITED TO THE FOLLOWING EXISTING CONDITIONS AND/OR MATERIALS THAT MUST BE REMOVED AND/OR SURFACES PREPARED FOR NEW MATERIALS/WORK: DRYWALL PARTITIONS AND WALLS, MASONRY WALLS, CEMENTITIOUS WALLS, CERAMIC FLOORS AND WALLS AND/OR FINISHES AND MECHANICAL/ELECTRICAL EQUIPMENT AND DEVICES.

AFMC
AIR FORCE MATERIEL COMMAND
72 ABW CIVIL ENGINEER DIRECTORATE
TINKER AFB, OK

PROJECT INFORMATION
WWYK240146
DESIGN & IMPLEMENT MONITORING & CONTROL SYSTEM FOR IWCS, B62516
TINKER AIR FORCE BASE, OKLAHOMA

REVISIONS

MARK	DATE	DESCRIPTION

MANAGEMENT INFORMATION
ISSUE DATE: 11/05/2025
DESIGN GROUP: HDR
DESIGNED BY: BP
DRAWN BY: SG
CHECKED BY: KC
DESIGN FILE LOCATION:

SHEET TITLE
GENERAL SYMBOLS, LEGENDS & ABBREVIATIONS

SHEET NUMBER
G-002

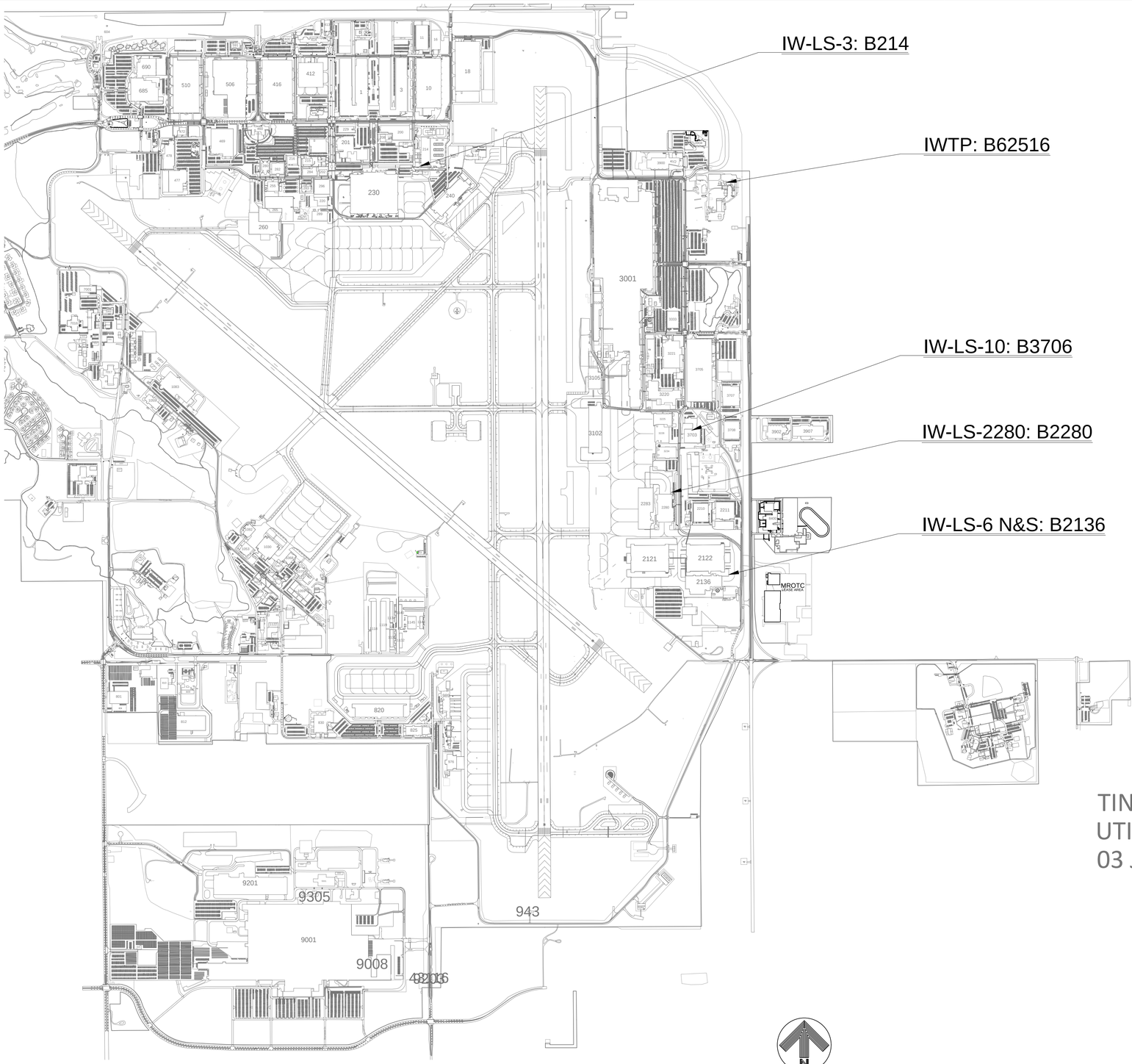

TINKER AIR FORCE BASE
UTILITY MAP
03 JUN 2015

01
G-101
LIFT STATION LOCATION
SCALE:1"=75'

0 75' 150'

AIR FORCE MATERIEL COMMAND
72 ABW CIVIL ENGINEER DIRECTORATE
TINKER AFB, OK

PROJECT INFORMATION
WWYK240146
DESIGN & IMPLEMENT MONITORING
& CONTROL SYSTEM FOR IWCS, B62516
TINKER AIR FORCE BASE, OKLAHOMA

REVISIONS

MARK	DATE	DESCRIPTION

MANAGEMENT INFORMATION
ISSUE DATE:11/05/2025
DESIGN GROUP: HDR
DESIGNED BY: JBG
DRAWN BY: JBG
CHECKED BY: JBG
DESIGN FILE LOCATION:

SHEET TITLE
GENERAL NOTES
AND
VICINITY MAP

SHEET NUMBER
G-101

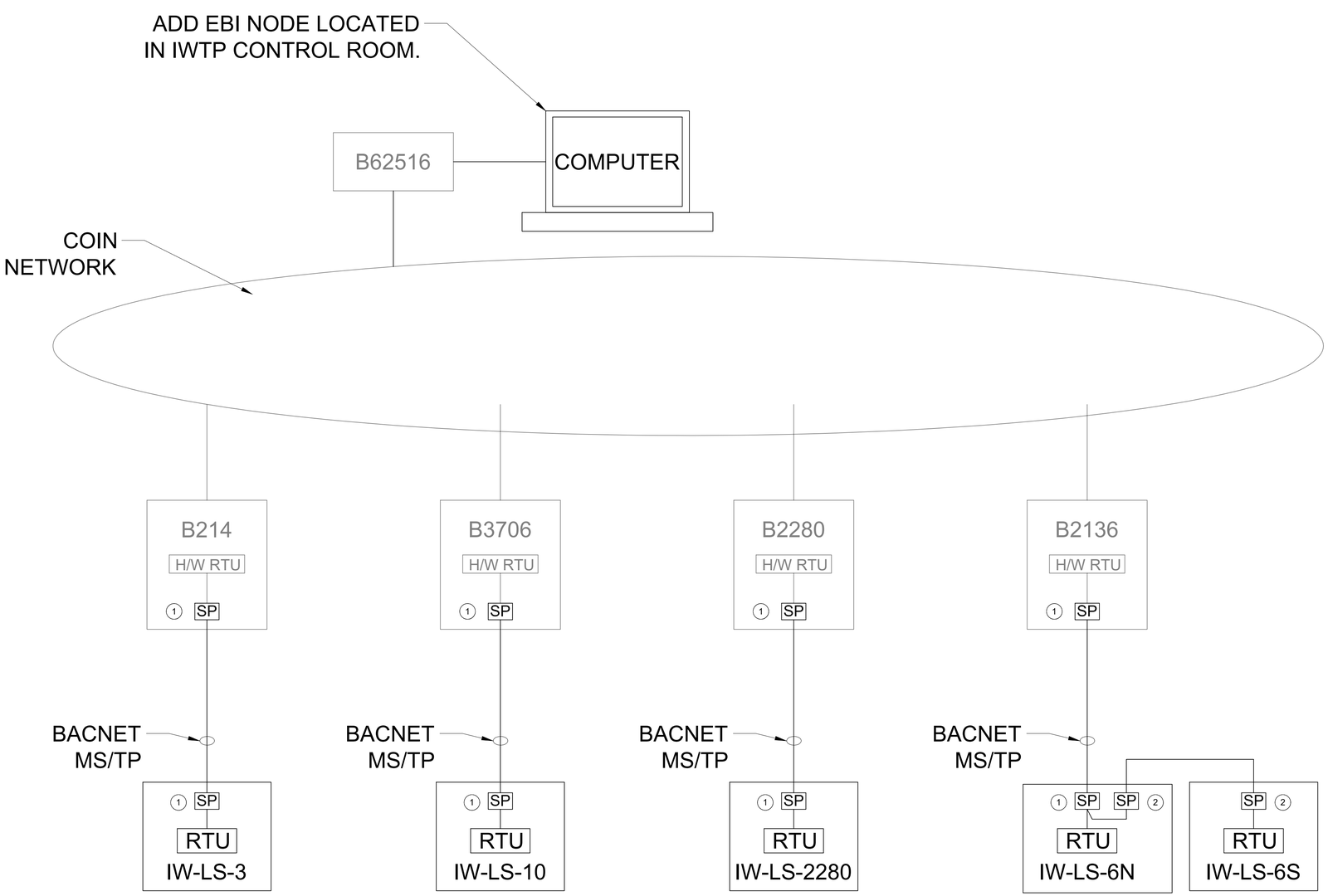

01
G-102
NETWORK OVERVIEW
SCALE:NTS

KEY NOTES:

1. PROVIDE SURGE PROTECTION FOR BACNET COMMUNICATION LINES BETWEEN RTU AND EBI PANEL.
2. PROVIDE SURGE PROTECTION FOR BACNET COMMUNICATION LINES BETWEEN W-LS-6N adn W-LS-6S,

AIR FORCE MATERIEL COMMAND
72 ABW CIVIL ENGINEER DIRECTORATE
TINKER AFB, OK

LICENSED PROFESSIONAL ENGINEER
STEPHEN HORRAS
35430
OKLAHOMA
11/05/25

PROJECT INFORMATION
WWYK240146
DESIGN & IMPLEMENT MONITORING
& CONTROL SYSTEM FOR IWCS, B62516
TINKER AIR FORCE BASE, OKLAHOMA

REVISIONS

MARK	DATE	DESCRIPTION

MANAGEMENT INFORMATION
ISSUE DATE:11/05/2025
DESIGN GROUP: HDR
DESIGNED BY:JBG
DRAWN BY:JBG
CHECKED BY:JBG
DESIGN FILE LOCATION:

SHEET TITLE
NETWORK OVERVIEW

SHEET NUMBER
G-102

GENERAL NOTES

1. REMOVE AND REPLACE ALL EXISTING PAVEMENTS, CURBS, DRIVEWAYS, SIDEWALKS, GRAVEL ROADWAYS, PIPE CULVERTS, CULVERT HEADWALLS, FENCES, SIGNS, AND MISCELLANEOUS ITEMS WHERE REQUIRED TO COMPLETE THE CONSTRUCTION.
2. REPAIR TO ORIGINAL CONDITION ANY DAMAGE INCURRED DURING CONSTRUCTION AT NO EXPENSE TO OWNER.
3. PRIOR TO BEGINNING ANY CONSTRUCTION, FIELD VERIFY AND PROTECT THE LOCATIONS AND ELEVATIONS OF ALL EXISTING FACILITIES (UTILITIES, PIPING, EQUIPMENT, STRUCTURES, FENCING, BARRIERS, PAVEMENT, SIDEWALKS, SIGNAGE, ETC.) WHICH PERTAIN TO AND/OR AFFECT CONSTRUCTION OF THIS PROJECT.
4. VERIFY ALL DEPTHS AND LOCATIONS OF EXISTING UTILITIES PRIOR TO ANY CONSTRUCTION. ALL UTILITIES MAY NOT BE SHOWN. CONTACT UTILITY SERVICE PROVIDERS AT LEAST 48 HOURS PRIOR TO TRENCHING OR EXCAVATION, AND REQUEST FIELD LOCATION OF UTILITIES. ONE-CALL LOCATOR SERVICES MAY NOT COVER ALL UTILITIES IN THIS AREA.
5. ANY EXISTING FACILITIES THAT ARE DAMAGED OR REMOVED SHALL BE REPAIRED OR REPLACED TO A CONDITION EQUAL TO OR BETTER THAN ORIGINAL CONDITIONS AT NO ADDITIONAL COSTS.
6. RESTORE ALL DRIVEWAYS, CULVERTS, HEADWALLS, LANDSCAPING, AND OTHER IMPROVEMENTS (REGARDLESS OF WHETHER THEY WERE CONSTRUCTED OR INSTALLED BY PUBLIC AGENCIES, UTILITIES, OR INDIVIDUALS) THAT ARE DISTURBED BY CONSTRUCTION TO A CONDITION EQUAL TO OR BETTER THAN ORIGINAL CONDITIONS.
7. ALL AREAS DISTURBED OR EXPOSED DURING CONSTRUCTION SHALL BE REVEGETATED AND RESTORED TO ORIGINAL CONDITIONS IN ACCORDANCE WITH THE PLANS AND SPECIFICATIONS.
8. IMMEDIATELY NOTIFY THE ENGINEER OF ANY UNREPORTED OBSTACLES THAT MAY IMPEDE OR PREVENT THE CONSTRUCTION OF THE WORK.
9. ANY PORTION OF THE PROJECT IMPROPERLY PLACED AND/OR CONFLICTING WITH ANY EXISTING STRUCTURE SHALL BE REMOVED, CORRECTLY PLACED AND NO SEPARATE PAY SHALL BE APPROVED FOR ASSOCIATED COSTS.
10. CONSTRUCTION OPERATIONS SHALL BE CONDUCTED IN SUCH A MANNER AS TO PROTECT EXISTING FACILITIES AT ALL TIMES.
11. RECORD AND SUPPLY TO ENGINEER THE FOLLOWING INFORMATION:
    - A. LOCATION AND ELEVATION OF ALL SUPPLEMENTARY CONNECTIONS.
    - B. "AS-BUILT" INVERTS AND PROFILE OF CONSTRUCTED UTILITIES.
    - C. THE NEW LOCATION AND DEPTH OF ALL RELOCATED AND/OR ADJUSTED UTILITIES.
    - D. LOCATION AND ELEVATION OF ALL UTILITIES ENCOUNTERED.
13. ALL HOLES, TRENCHES, AND OTHER HAZARDOUS AREAS SHALL BE ADEQUATELY PROTECTED BY PROTECTIVE DEVICES.
14. ALL TRENCHES SHALL BE BACKFILLED WITHIN SEVEN (7) DAYS OF INITIAL EXCAVATION UNLESS APPROVED IN WRITING BY ENGINEER.
15. ALL EROSION AND SEDIMENTATION CONTROLS SHALL BE IMPLEMENTED BEFORE CONSTRUCTION COMMENCES AND SHALL BE MAINTAINED UNTIL SITE IS STABILIZED AFTER COMPLETION OF WORK IN EACH WORK AREA.
16. ANY DEWATERING SHALL BE INCLUDED IN THE CONTRACT PRICE. NO SPECIAL PAY ITEM.
17. ALL SPOIL AND EXCESS MATERIAL NOT USED IN CONSTRUCTION SHALL BE REMOVED FROM THE SITE AND PROPERLY DISPOSED OF, AS COORDINATED WITH THE CONTRACTING OFFICER.
18. CONFORM TO THE APPLICABLE LOCAL, STATE, AND FEDERAL REGULATIONS REGARDING TRENCH SAFETY. PREPARE A TRENCH SAFETY PLAN FOR ALL EXCAVATIONS EXCEEDING 4-FEET IN DEPTH AND 4-FEET IN WIDTH, TO BE INCLUDED IN HEALTH AND SAFETY PLAN.
19. CONFINE WORK AREAS TO WITHIN THE PROJECT BOUNDARY. PRIOR TO FINAL ACCEPTANCE, REMOVE ALL TRASH AND DEBRIS WITHIN THE PERMANENT EASEMENTS AND TEMPORARY EASEMENTS.
20. FIELD CHANGES TO THE HORIZONTAL AND VERTICAL DESIGN MAY BE ALLOWED SUBJECT TO THE APPROVAL OF THE ENGINEER. FIELD CHANGES SHALL COMPLY WITH THE DESIGN INTENT AS NOTED ON THE DRAWINGS AND SPECIFICATIONS.
21. ALL CONSTRUCTION SHALL FOLLOW OKLAHOMA DEPARTMENT OF TRANSPORTATION (ODOT) SPECIFICATIONS, STANDARDS, AND MATERIAL ITEM NUMBERS AS CLOSELY AS POSSIBLE.

ENVIRONMENTAL QUALITY NOTES:

1. PRIOR TO COMMENCING CONSTRUCTION, ALL TEMPORARY EROSION AND SEDIMENTATION (E&S) CONTROL MEASURES SHALL BE PROPERLY SELECTED AND INSTALLED. ALL TEMPORARY E&S CONTROL MEASURES SHALL BE MAINTAINED IN ACCORDANCE WITH THE MANUFACTURER'S SPECIFICATIONS AND GOOD ENGINEERING PRACTICES. THE CONTROLS SHALL REMAIN IN PLACE UNTIL DISTURBED AREAS ARE REVEGETATED AND THE AREAS HAVE BECOME PERMANENTLY STABILIZED.
2. IF SEDIMENT ESCAPES THE CONSTRUCTION SITE, OFF-SITE ACCUMULATIONS OF SEDIMENT MUST BE REMOVED AT A FREQUENCY SUFFICIENT TO MINIMIZE OFFSITE IMPACTS TO WATER QUALITY (E.G., FUGITIVE SEDIMENT IN STREET BEING WASHED INTO SURFACE STREAMS OR SENSITIVE FEATURES BY THE NEXT RAIN).
3. LITTER, CONSTRUCTION DEBRIS, AND CONSTRUCTION CHEMICALS EXPOSED TO STORMWATER SHALL BE PREVENTED FROM BECOMING A POLLUTANT SOURCE FOR STORMWATER DISCHARGES (E.G., SCREENING OUTFALLS, PICKED UP DAILY).
4. ALL SPOILS (EXCAVATED MATERIAL) GENERATED FROM THE PROJECT SITE AND STORED ON-SITE MUST HAVE PROPER E&S CONTROLS INSTALLED.
5. STABILIZATION MEASURES SHALL BE INITIATED AS SOON AS PRACTICAL IN PORTIONS OF THE SITE WHERE CONSTRUCTION ACTIVITIES HAVE TEMPORARILY OR PERMANENTLY CEASED, AND CONSTRUCTION ACTIVITIES WILL NOT RESUME WITHIN 21 DAYS. WHEN THE INITIATION OF STABILIZATION MEASURES BY THE 14TH DAY IS PRECLUDED BY WEATHER CONDITIONS, STABILIZATION MEASURES SHALL BE INITIATED AS SOON AS PRACTICABLE.
6. THESE GENERAL CONSTRUCTION NOTES SHALL BE PROVIDED TO ALL SUBCONTRACTORS.

EROSION AND SEDIMENTATION CONTROL NOTES:

1. EROSION CONTROL MEASURES, SITE WORK AND RESTORATION WORK SHALL BE IN ACCORDANCE WITH THE CONTRACT.
2. SILT FENCE, ROCK BERMS, SEDIMENTATION BASINS, SILT SOCK AND SIMILARLY RECOGNIZED TECHNIQUES AND MATERIALS SHALL BE EMPLOYED DURING CONSTRUCTION TO PREVENT POINT SOURCE SEDIMENTATION LOADING OF DOWNSTREAM FACILITIES. SUCH INSTALLATION SHALL BE REGULARLY INSPECTED FOR EFFECTIVENESS. ADDITIONAL MEASURES MAY BE REQUIRED IF, IN THE OPINION OF THE ENGINEER, THEY ARE WARRANTED.
3. MAINTAIN ALL TEMPORARY EROSION CONTROL STRUCTURES.

TRENCH SAFETY NOTES:

1. ALL WORK PERTAINING TO OPEN TRENCHING SHALL COMPLY WITH THE U. S. OCCUPATIONAL SAFETY AND HEALTH ADMINISTRATION (OSHA) REGULATIONS.
2. THE CONTRACTOR AND/OR CONTRACTOR'S INDEPENDENTLY RETAINED EMPLOYEE OR STRUCTURAL DESIGN/GEOTECHNICAL/SAFETY/EQUIPMENT CONSULTANT, IF ANY, SHALL REVIEW THESE PLANS AND AVAILABLE GEOTECHNICAL INFORMATION AND THE INSTALLATION SITE(S) WITHIN THE PROJECT WORK AREA IN ORDER TO IMPLEMENT CONTRACTOR'S TRENCH EXCAVATION SAFETY PROTECTION SYSTEM, PROGRAMS AND/OR PROCEDURES. THE CONTRACTOR'S IMPLEMENTATION OF THE SYSTEMS, PROGRAMS AND/OR PROCEDURES SHALL PROVIDE FOR ADEQUATE TRENCH EXCAVATION SAFETY PROTECTION THAT COMPLIES WITH OSHA STANDARDS FOR TRENCH EXCAVATION. SPECIFICALLY, CONTRACTOR AND/OR CONTRACTOR'S INDEPENDENTLY RETAINED EMPLOYEE OR SAFETY CONSULTANT SHALL IMPLEMENT A TRENCH SAFETY PROGRAM IN ACCORDANCE WITH OSHA STANDARDS GOVERNING THE PRESENCE OF ACTIVITIES OF INDIVIDUALS WORKING IN AND AROUND TRENCH EXCAVATION.

TRAFFIC CONTROL NOTES:

1. PROVIDE AND MAINTAIN ANY REQUIRED TRAFFIC CONTROL DEVICES DURING CONSTRUCTION IN ACCORDANCE WITH THE STATE'S DEPARTMENT OF TRANSPORTATION MANUAL ON UNIFORM TRAFFIC CONTROL DEVICES.
2. ALL TRAFFIC CONTROL DEVICES, LAYOUTS, AND MAINTENANCE SHOULD BE INCIDENTAL TO THE COST ASSOCIATED WITHIN THE VICINITY OF HIGHWAYS, ROADS, AND STREETS INDICATED ON THE CONTRACT DRAWINGS.
3. MARK ALL CONSTRUCTION EQUIPMENT AND VEHICLES WITH COMPANY PAINT DESIGNS, INSIGNIAS OR OTHER COMPANY MARKINGS WHICH ARE CLEARLY VISIBLE.
4. CONSTRUCTION EQUIPMENT SHALL HAVE AUTOMATIC SIGNALING DEVICES TO SOUND AN ALARM WHEN MOVING IN REVERSE.
5. ONLY RUBBER TIRED VEHICLES WILL BE ALLOWED ON EXISTING PAVEMENT WHICH IS TO REMAIN.

COORDINATION AND COMMUNICATION DURING CONSTRUCTION

1. IF AFTER HOURS OR WEEKEND WORK IS REQUIRED, THE CONTRACTING OFFICER SHALL BE NOTIFIED 14 CALENDAR DAYS PRIOR TO DAY OF NEED. AFTER HOURS OR WEEKEND WORK ARE SUBJECT TO GOVERNMENT APPROVAL AND AVAILABILITY OF ESCORTS.
2. ALL PERSONNEL ARE RESPONSIBLE FOR OBTAINING PROPER PASS PRIOR TO ENTERING SITE. COORDINATE WITH CONTRACTING OFFICER ON SUBMITTING ACCESS REQUESTS A MINIMUM OF 14 CALENDAR DAYS PRIOR (ACCESS REQUIREMENTS ARE SUBJECT TO SUDDEN CHANGES TO MEET SECURITY REQUIREMENTS).
3. KEEP ALL ROADS CLEAN OF CONSTRUCTION DEBRIS, MUD, ETC. AT ALL TIMES. PROVIDE EQUIPMENT AND PERSONNEL TO CLEAN ROADS AS REQUESTED BY CONTRACTING OFFICER.
4. VIDEO DOCUMENT CONDITION OF ALL PAVEMENTS, SIDEWALKS, GRAVEL AREAS, LANDSCAPED AREAS, STREETS, PARKING AREAS, ETC. PRIOR TO CONSTRUCTION AND REPAIR DUE TO DAMAGE CAUSED BY CONSTRUCTION AND/OR DEMOLITION ACTIVITIES AT NO ADDITIONAL COST TO THE GOVERNMENT AS REQUESTED BY CONTRACTING OFFICER.
5. CONTRACTOR SHALL PROVIDE OIL/FUEL SORBENT SOCKS DURING CONSTRUCTION IN THE FUEL TRUCK PARKING AREA. SORBENT SOCKS SHALL BE IMMEDIATELY DEPLOYED TO PROTECT CONSTRUCTION TRENCH IN THE EVENT OF A FUEL SPILL.

CIVIL LEGEND

AIR CONDITIONER UNIT	FENCE
FIRE HYDRANT	CHAINLINK FENCE
FLAG POLE	TREE LINE
GAS METER	SECURITY FENCE
GAS VALVE	ELECTRIC FENCE
GAS VENT	HOG WIRE FENCE
GROUND TRANSFORMER	ELECTRIC UNDERGROUND LINE
GUARD POST	OVERHEAD ELECTRIC LINE
LIGHT POLE	GAS LINE
STORM DRAIN MANHOLE	GAS LINE (ATLAS)
ELECTRIC MANHOLE	SANITARY SEWER LINE
SANITARY SEWER MANHOLE	SANITARY SEWER LINE (ATLAS)
TELEPHONE MANHOLE	STORM DRAIN LINE
PAY PHONE	OVERHEAD TELEPHONE LINE
TRANSFORMER POLE	UNDERGROUND TELEPHONE LINE
POWER POLE	UNDERGROUND FIBER OPTIC LINE
GUY POLE	UNDERGROUND CABLE TV LINE
DOWN GUY	WATER LINE
MONUMENT FOUND	WATER LINE (ATLAS)
MONUMENT SET	WATER LINE (IRRIGATION)
SANITARY SEWER CLEANOUT	MARKED PIPELINE
COMMERCIAL SIGN	UNKNOWN UNDERGROUND UTILITY
SIGN	GROUND SURFACE CONTOUR
SPRINKLER HEAD	CURB AND GUTTER
SPRINKLER VALVE	SURFACE DRAINAGE FLOWLINE
TELEPHONE RISER	LIMITS OF CONSTRUCTION
COMMUNICATIONS VAULT	TREE DRIP LINE
TRAFFIC/ELECTRIC PULL BOX	SHRUB LINE
WATER METER	EXISTING CONCRETE
WATER VALVE BOX	EXISTING ASPHALT
UST FUEL FILL PORT	EXISTING RIPRAP
GROUND LIGHT	CONCRETE DEMO
HANDHOLE, ELECTRIC	ASPHALT DEMO
ELECTRIC METER	PROPOSED ASPHALT
HOSE BIB	PROPOSED CONCRETE
WATER VENT	
TRAFFIC DETECTOR LOOP	
TRAFFIC SIGNAL POLE	
TRAFFIC CONTROL BOX	
PARKING METER	
DOUBLE PARKING METER	
BORE HOLE LOCATION	
GEO PROBE	
MONITORING WELL	
GUTTER ELEVATION, UNLESS OTHERWISE NOTED	

LEGEND NOTES

1. ALL SYMBOLS OR LINETYPES/PATTERNS ARE NOT NECESSARILY USED ON THIS PROJECT.
2. SCREENING OR SHADING OF WORK IS USED TO INDICATE EXISTING COMPONENTS OR TO DE-EMPHASIZE PROPOSED IMPROVEMENTS TO HIGHLIGHT SELECTED TRADE WORK. REFER TO CONTEXT OF EACH SHEET FOR USAGE .

ABBREVIATIONS

ME: MATCH EXISTING
FL: FLOW LINE
TC: TOP OF CURB
TW: TOP OF WALL
TYP: TYPICAL
DIA: DIAMETER
NTS: NOT TO SCALE
OCEW: ON CENTER EACH WAY

AFMC
AIR FORCE MATERIEL COMMAND
72 ABW CIVIL ENGINEER DIRECTORATE
TINKER AFB, OK

11/05/2025
LICENSED PROFESSIONAL ENGINEER
RICHARD A. WHITE
28369
OKLAHOMA

PROJECT INFORMATION
WWYK240146
DESIGN & IMPLEMENT MONITORING & CONTROL SYSTEM FOR IWCS, B62516
TINKER AIR FORCE BASE, OKLAHOMA

REVISIONS

MARK	DATE	DESCRIPTION

MANAGEMENT INFORMATION
ISSUE DATE: 11/5/2025
DESIGN GROUP: HDR
DESIGNED BY: R. WHITE
DRAWN BY: G. GUERRA
CHECKED BY: B. WECKERLIN
DESIGN FILE LOCATION:

SHEET TITLE
CIVIL GENERAL NOTES AND LEGEND

SHEET NUMBER
C-001

A1
C-100

OVERALL SITE PLAN

SCALE: 1" = 500'

0 500' 1000' 2000'

SCALE: 1" = 500'

AIR FORCE MATERIEL COMMAND
72 ABW CIVIL ENGINEER DIRECTORATE

TINKER AFB, OK

11/05/2025

LICENSED PROFESSIONAL ENGINEER
RICHARD A. WHITE
28369
OKLAHOMA

PROJECT INFORMATION

WWYK240146
DESIGN & IMPLEMENT MONITORING
& CONTROL SYSTEM FOR IWCS, B62516

TINKER AIR FORCE BASE, OKLAHOMA

REVISIONS

MARK	DATE	DESCRIPTION

MANAGEMENT INFORMATION

ISSUE DATE: 11/5/2025
DESIGN GROUP: HDR
DESIGNED BY:R. WHITE
DRAWN BY:G. GUERRA
CHECKED BY:B. WECKERLIN
DESIGN FILE LOCATION:

SHEET TITLE

CIVIL
OVERALL
SITE PLAN

SHEET NUMBER

C-100

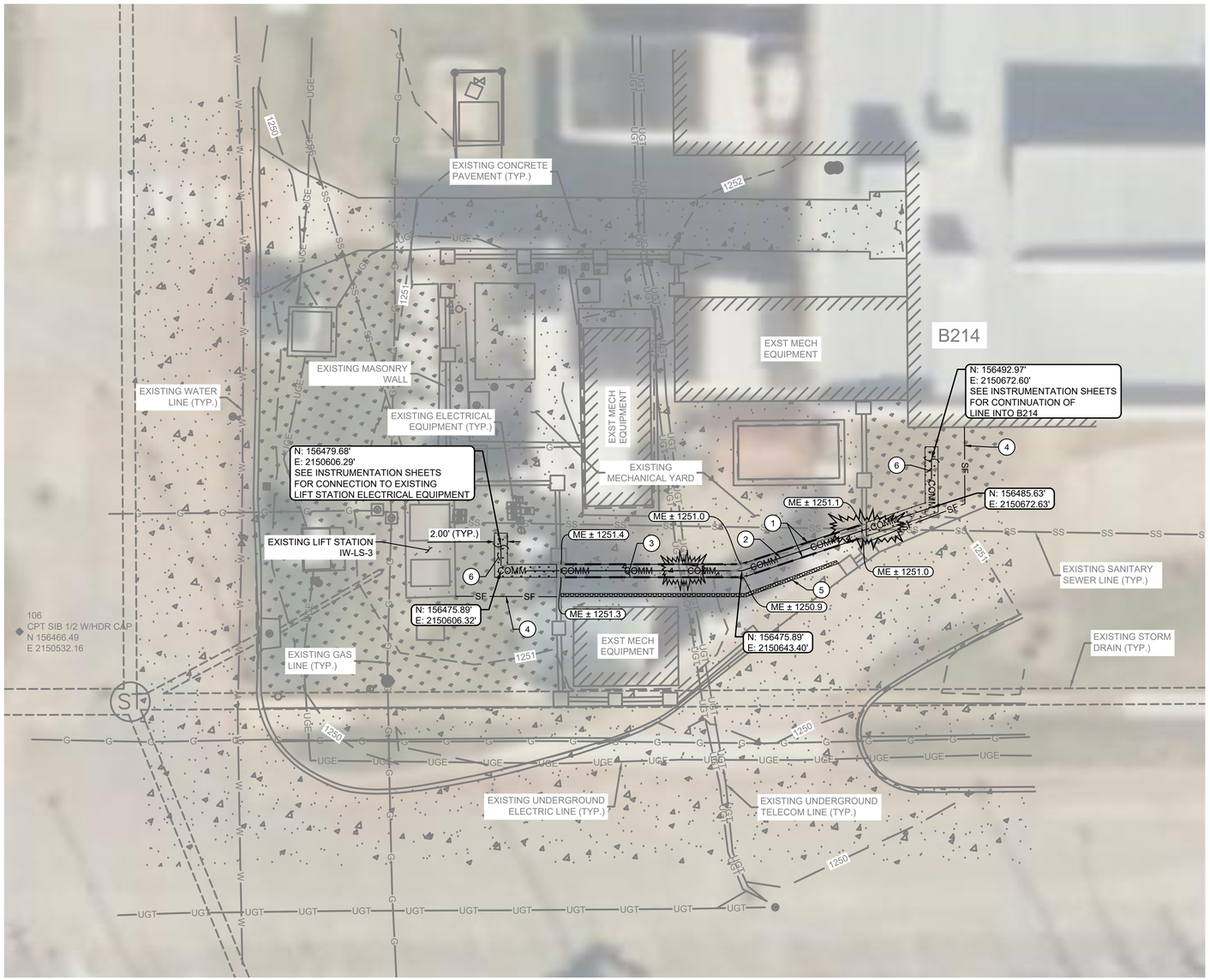

A1
C-101
SITE PLAN IW-LS-3
SCALE: 1"=10'

0 10' 20' 40'
SCALE: 1" = 10'

GENERAL NOTES

1. CONTRACTOR TO VERIFY LOCATIONS OF EXISTING UTILITIES AND ALL SURVEY INFORMATION PRIOR TO CONSTRUCTION.
2. CONTRACTOR SHALL ADJUST MANHOLES AND VALVE BOXES WITHIN PROJECT LIMIT TO FINISH GRADE.
3. CONTRACTOR AND/OR CONTRACTOR'S INDEPENDENTLY RETAINED EMPLOYEE OR STRUCTURAL DESIGN/GEOTECHNICAL/SAFETY/EQUIPMENT CONSULTANT, IF ANY, SHALL REVIEW THESE PLANS AND AVAILABLE GEOTECHNICAL INFORMATION AND THE ANTICIPATED INSTALLATION SITE(S) WITHIN THE PROJECT WORK AREA IN ORDER TO IMPLEMENT CONTRACTORS TRENCH EXCAVATION SAFETY PROTECTION SYSTEMS, PROGRAMS AND/OR PROCEDURES. THE CONTRACTORS IMPLEMENTATION OF THE SYSTEMS, PROGRAMS AND/OR PROCEDURES SHALL PROVIDE FOR ADEQUATE TRENCH EXCAVATION SAFETY PROTECTION THAT COMPLIES WITH, AS A MINIMUM OSHA STANDARDS FOR TRENCH EXCAVATIONS. CONTRACTOR AND/OR CONTRACTORS INDEPENDENTLY RETAINED EMPLOYEE OR SAFETY CONSULTANT SHALL IMPLEMENT A TRENCH SAFETY PROGRAM IN ACCORDANCE WITHIN OSHA STANDARDS GOVERNING THE PRESENCE AND ACTIVITIES OF INDIVIDUALS WORKING IN AND AROUND TRENCH EXCAVATION.

KEY NOTES

1. FULL DEPTH SAWCUT.
2. PROPOSED UNDERGROUND COMMUNICATION LINE. SEE INSTRUMENTATION SHEETS FOR ADDITIONAL INFORMATION.
3. EXISTING CONCRETE PAVEMENT TO BE REMOVED AND REPLACED. SEE DETAIL C3/C-501.
4. FURNISH AND INSTALL SILT FENCE. SEE DETAIL B1/C-501.
5. FURNISH AND INSTALL SILT LOG. SEE DETAIL A1/C-501.
6. 4" TOPSOIL AND SOD AFTER TRENCH IS BACKFILLED.

LEGEND

XXXX	EXISTING CONTOUR
W	EXISTING WATER LINE
SS	EXISTING SANITARY SEWER LINE
G	EXISTING GAS LINE
UGT	EXISTING UNDERGROUND TELECOM
UGE	EXISTING UNDERGROUND ELECTRIC
COMM	PROPOSED COMMUNICATION LINE
	FULL DEPTH SAWCUT
SF	SILT FENCE
	SILT LOG
	EXISTING CONCRETE PAVEMENT
	EXISTING CONCRETE PAVEMENT TO BE REMOVED AND REPLACED
	EXISTING GRASS AREA
	PROPOSED SOD
ME ± XX.XX	MATCH EXISTING ELEVATION

CAUTION!
EXISTING UNDERGROUND
UTILITIES THIS LOCATION

AIR FORCE MATERIEL COMMAND
72 ABW CIVIL ENGINEER DIRECTORATE
TINKER AFB, OK

11/05/2025
LICENSED PROFESSIONAL ENGINEER
RICHARD A. WHITE
28369
OKLAHOMA

PROJECT INFORMATION
WWYK240146
DESIGN & IMPLEMENT MONITORING
& CONTROL SYSTEM FOR IWCS, B62516
TINKER AIR FORCE BASE, OKLAHOMA

REVISIONS

MARK	DATE	DESCRIPTION

MANAGEMENT INFORMATION
ISSUE DATE: 11/5/2025
DESIGN GROUP: HDR
DESIGNED BY:Value
DRAWN BY:G. GUERRA
CHECKED BY:Value
DESIGN FILE LOCATION:

SHEET TITLE
CIVIL
SITE PLAN
IW-LS-3

SHEET NUMBER
C-101

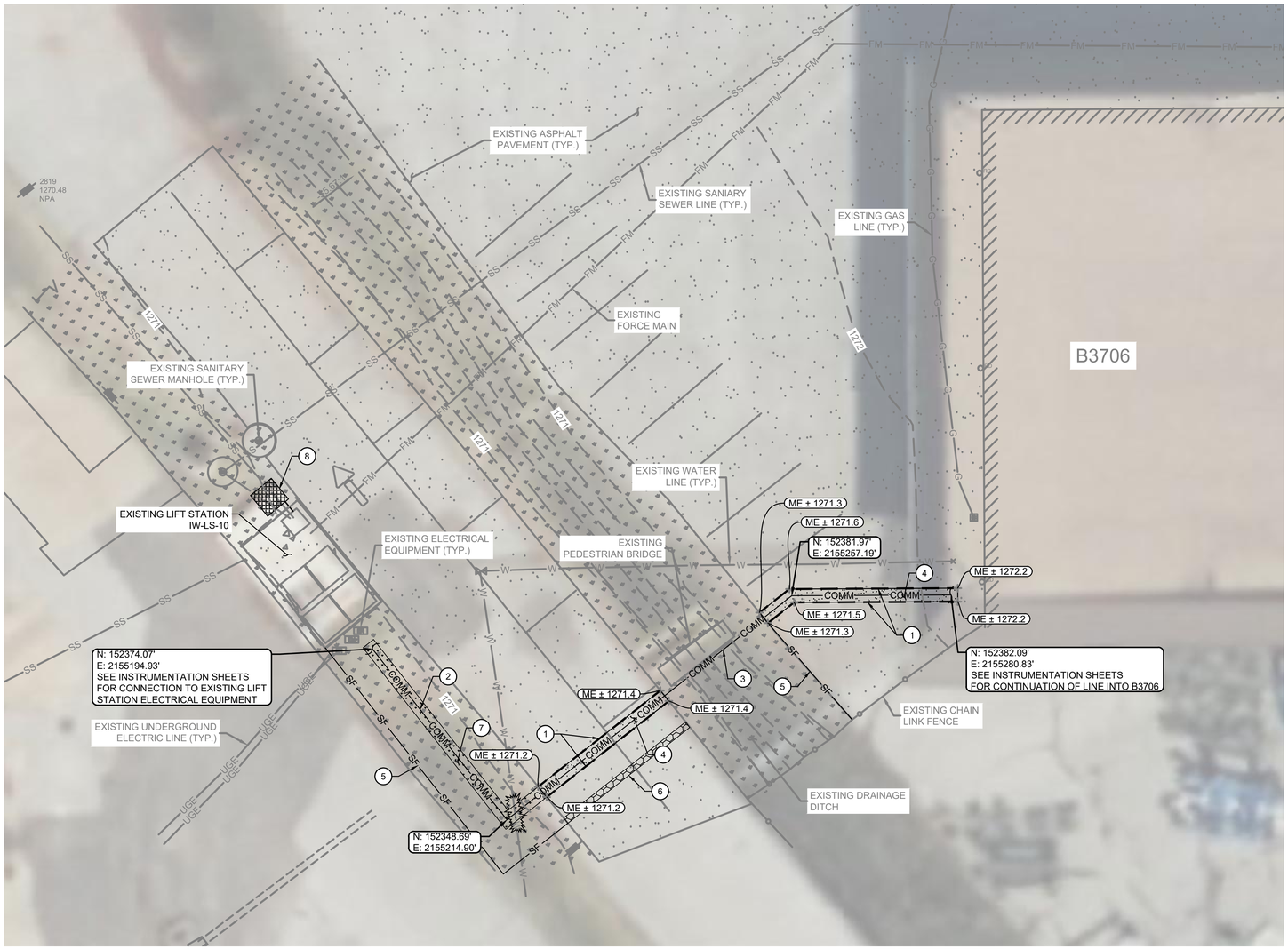

A1
C-102
SITE PLAN IW-LS-10
SCALE: 1"=10'

0 10' 20' 40'
SCALE: 1" = 10'

GENERAL NOTES

1. CONTRACTOR TO VERIFY LOCATIONS OF EXISTING UTILITIES AND ALL SURVEY INFORMATION PRIOR TO CONSTRUCTION.
2. CONTRACTOR SHALL ADJUST MANHOLES AND VALVE BOXES WITHIN PROJECT LIMIT TO FINISH GRADE.
3. CONTRACTOR AND/OR CONTRACTOR'S INDEPENDENTLY RETAINED EMPLOYEE OR STRUCTURAL DESIGN/GEOTECHNICAL/SAFETY/EQUIPMENT CONSULTANT, IF ANY, SHALL REVIEW THESE PLANS AND AVAILABLE GEOTECHNICAL INFORMATION AND THE ANTICIPATED INSTALLATION SITE(S) WITHIN THE PROJECT WORK AREA IN ORDER TO IMPLEMENT CONTRACTORS TRENCH EXCAVATION SAFETY PROTECTION SYSTEMS, PROGRAMS AND/OR PROCEDURES. THE CONTRACTORS IMPLEMENTATION OF THE SYSTEMS, PROGRAMS AND/OR PROCEDURES SHALL PROVIDE FOR ADEQUATE TRENCH EXCAVATION SAFETY PROTECTION THAT COMPLIES WITH, AS A MINIMUM OSHA STANDARDS FOR TRENCH EXCAVATIONS. CONTRACTOR AND/OR CONTRACTORS INDEPENDENTLY RETAINED EMPLOYEE OR SAFETY CONSULTANT SHALL IMPLEMENT A TRENCH SAFETY PROGRAM IN ACCORDANCE WITHIN OSHA STANDARDS GOVERNING THE PRESENCE AND ACTIVITIES OF INDIVIDUALS WORKING IN AND AROUND TRENCH EXCAVATION.

KEY NOTES (#)

1. FULL DEPTH SAWCUT
2. PROPOSED UNDERGROUND COMMUNICATION LINE. SEE INSTRUMENTATION SHEETS FOR ADDITIONAL INFORMATION.
3. PROPOSED ABOVEGROUND COMMUNICATION LINE TO BE SECURED TO PEDESTRIAN BRIDGE. SEE INSTRUMENTATION SHEETS FOR ADDITIONAL INFORMATION.
4. EXISTING ASPHALT PAVEMENT TO BE REMOVED AND REPLACED. SEE DETAIL C4/C-501.
5. FURNISH AND INSTALL SILT FENCE. SEE DETAIL B1/C-501.
6. FURNISH AND INSTALL SILT LOG. SEE DETAIL A1/C-501.
7. 4" TOP SOIL AND SOD AFTER TRENCH IS BACKFILLED.
8. PROPOSED 4'X4' CONCRETE VAULT WITH HS-20 RATED HYDRAULIC ASSIST LID. SEE DETAILS D1/C-502 AND D4/C-502.

LEGEND

XXXX	EXISTING CONTOUR
W	EXISTING WATER LINE
SS	EXISTING SANITARY SEWER LINE
FM	EXISTING FORCE MAIN
G	EXISTING GAS LINE
UGE	EXISTING UNDERGROUND ELECTRIC
COMM	PROPOSED COMMUNICATION LINE
	FULL DEPTH SAWCUT
SF	SILT FENCE
	SILT LOG
	EXISTING ASPHALT PAVEMENT
	EXISTING ASPHALT PAVEMENT TO BE REMOVED AND REPLACED
	EXISTING GRASS AREA
	PROPOSED SOD
ME ± XX.XX	MATCH EXISTING ELEVATION

CAUTION!
EXISTING UNDERGROUND
UTILITIES THIS LOCATION

AIR FORCE MATERIEL COMMAND
72 ABW CIVIL ENGINEER DIRECTORATE
TINKER AFB, OK

11/05/2025
LICENSED PROFESSIONAL ENGINEER
RICHARD A. WHITE
28369
OKLAHOMA

PROJECT INFORMATION
WWYK240146
DESIGN & IMPLEMENT MONITORING
& CONTROL SYSTEM FOR IWCS, B62516
TINKER AIR FORCE BASE, OKLAHOMA

REVISIONS

MARK	DATE	DESCRIPTION

MANAGEMENT INFORMATION
ISSUE DATE: 11/5/2025
DESIGN GROUP: HDR
DESIGNED BY:R. WHITE
DRAWN BY:G. GUERRA
CHECKED BY:B. WECKERLIN
DESIGN FILE LOCATION:

SHEET TITLE
CIVIL
SITE PLAN
IW-LS-10

SHEET NUMBER
C-102

A1
C-103

SITE PLAN IW-LS-2280

SCALE: 1"=10'

0 10' 20' 40'

SCALE: 1" = 10'

GENERAL NOTES

1. CONTRACTOR TO VERIFY LOCATIONS OF EXISTING UTILITIES AND ALL SURVEY INFORMATION PRIOR TO CONSTRUCTION.
2. CONTRACTOR SHALL ADJUST MANHOLES AND VALVE BOXES WITHIN PROJECT LIMIT TO FINISH GRADE.
3. CONTRACTOR AND/OR CONTRACTOR'S INDEPENDENTLY RETAINED EMPLOYEE OR STRUCTURAL DESIGN/GEOTECHNICAL/SAFETY/EQUIPMENT CONSULTANT, IF ANY, SHALL REVIEW THESE PLANS AND AVAILABLE GEOTECHNICAL INFORMATION AND THE ANTICIPATED INSTALLATION SITE(S) WITHIN THE PROJECT WORK AREA IN ORDER TO IMPLEMENT CONTRACTORS TRENCH EXCAVATION SAFETY PROTECTION SYSTEMS, PROGRAMS AND/OR PROCEDURES. THE CONTRACTORS IMPLEMENTATION OF THE SYSTEMS, PROGRAMS AND/OR PROCEDURES SHALL PROVIDE FOR ADEQUATE TRENCH EXCAVATION SAFETY PROTECTION THAT COMPLIES WITH, AS A MINIMUM OSHA STANDARDS FOR TRENCH EXCAVATIONS. CONTRACTOR AND/OR CONTRACTORS INDEPENDENTLY RETAINED EMPLOYEE OR SAFETY CONSULTANT SHALL IMPLEMENT A TRENCH SAFETY PROGRAM IN ACCORDANCE WITHIN OSHA STANDARDS GOVERNING THE PRESENCE AND ACTIVITIES OF INDIVIDUALS WORKING IN AND AROUND TRENCH EXCAVATION.

KEY NOTES

1. PROPOSED ABOVEGROUND COMMUNICATION LINE. SEE INSTRUMENTATION SHEETS FOR ADDITIONAL INFORMATION.

LEGEND

XXXX	EXISTING CONTOUR
SS	EXISTING SANITARY SEWER LINE
UGE	EXISTING UNDERGROUND ELECTRIC
COMM	PROPOSED COMMUNICATION LINE
	EXISTING CONCRETE PAVEMENT

AIR FORCE MATERIEL COMMAND
72 ABW CIVIL ENGINEER DIRECTORATE

TINKER AFB, OK

11/05/2025

LICENSED PROFESSIONAL ENGINEER
RICHARD A. WHITE
28369
OKLAHOMA

PROJECT INFORMATION

WWYK240146
DESIGN & IMPLEMENT MONITORING
& CONTROL SYSTEM FOR IWCS, B62516

TINKER AIR FORCE BASE, OKLAHOMA

REVISIONS

MARK	DATE	DESCRIPTION

MANAGEMENT INFORMATION

ISSUE DATE: 11/5/2025
DESIGN GROUP: HDR
DESIGNED BY:R. WHITE
DRAWN BY:G. GUERRA
CHECKED BY:B. WECKERLIN
DESIGN FILE LOCATION:

SHEET TITLE

CIVIL
SITE PLAN
IW-LS-2280

SHEET NUMBER

C-103

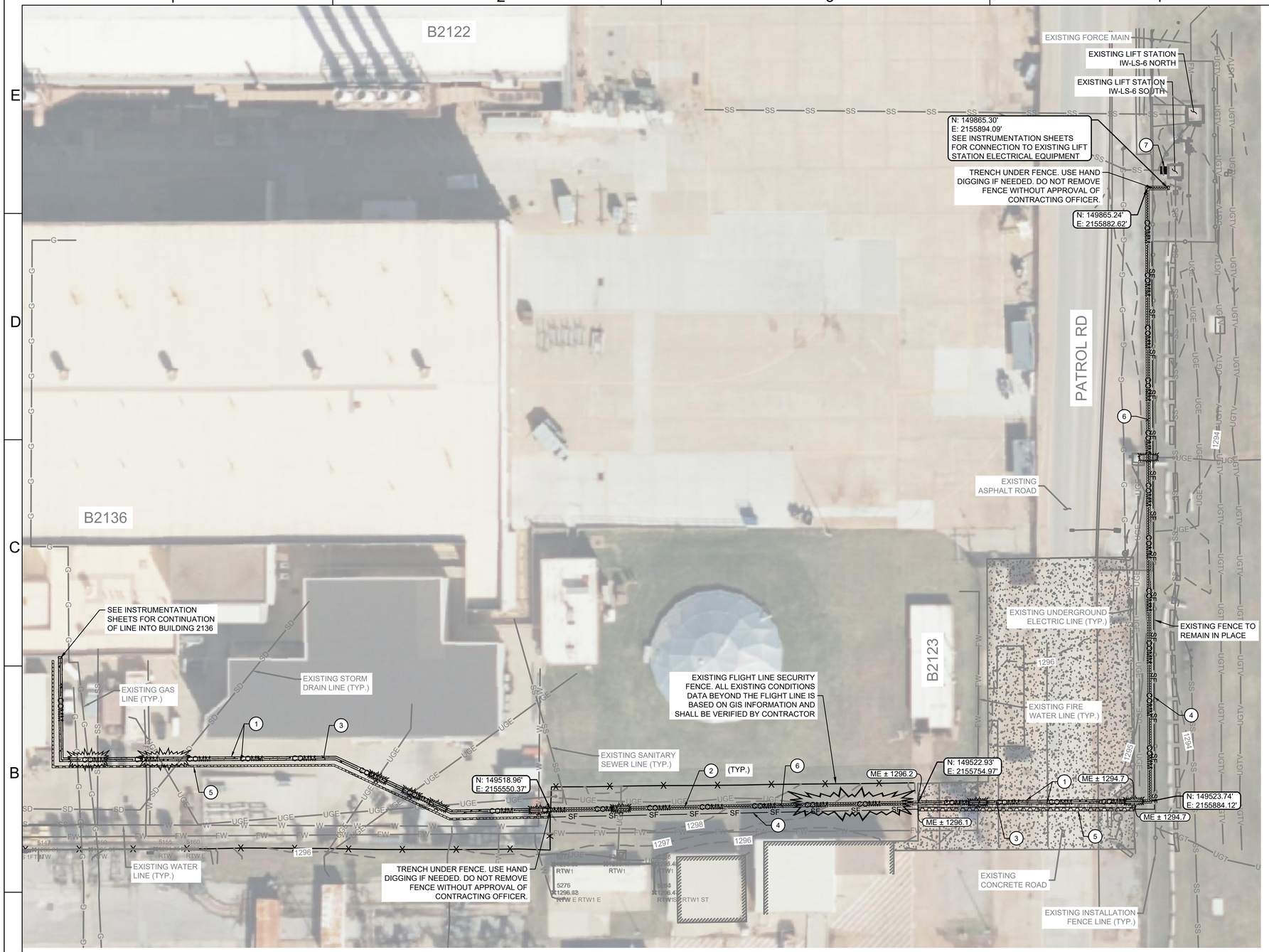

A1
C-104

SITE PLAN IW-LS-6 NORTH AND SOUTH

SCALE: 1" = 30'

0 30' 60' 120'

SCALE: 1" = 30'

GENERAL NOTES

1. CONTRACTOR TO VERIFY LOCATIONS OF EXISTING UTILITIES AND ALL SURVEY INFORMATION PRIOR TO CONSTRUCTION.
2. CONTRACTOR SHALL ADJUST MANHOLES AND VALVE BOXES WITHIN PROJECT LIMIT TO FINISH GRADE.
3. CONTRACTOR AND/OR CONTRACTOR'S INDEPENDENTLY RETAINED EMPLOYEE OR STRUCTURAL DESIGN/GEOTECHNICAL/SAFETY/EQUIPMENT CONSULTANT, IF ANY, SHALL REVIEW THESE PLANS AND AVAILABLE GEOTECHNICAL INFORMATION AND THE ANTICIPATED INSTALLATION SITE(S) WITHIN THE PROJECT WORK AREA IN ORDER TO IMPLEMENT CONTRACTORS TRENCH EXCAVATION SAFETY PROTECTION SYSTEMS, PROGRAMS AND/OR PROCEDURES. THE CONTRACTORS IMPLEMENTATION OF THE SYSTEMS, PROGRAMS AND/OR PROCEDURES SHALL PROVIDE FOR ADEQUATE TRENCH EXCAVATION SAFETY PROTECTION THAT COMPLIES WITH, AS A MINIMUM OSHA STANDARDS FOR TRENCH EXCAVATIONS. CONTRACTOR AND/OR CONTRACTORS INDEPENDENTLY RETAINED EMPLOYEE OR SAFETY CONSULTANT SHALL IMPLEMENT A TRENCH SAFETY PROGRAM IN ACCORDANCE WITHIN OSHA STANDARDS GOVERNING THE PRESENCE AND ACTIVITIES OF INDIVIDUALS WORKING IN AND AROUND TRENCH EXCAVATION.

KEY NOTES (#)

1. FULL DEPTH SAWCUT
2. PROPOSED UNDERGROUND COMMUNICATION LINE. SEE INSTRUMENTATION SHEETS FOR ADDITIONAL INFORMATION.
3. EXISTING CONCRETE PAVEMENT TO BE REMOVED AND REPLACED. SEE DETAIL C3/C-501.
4. FURNISH AND INSTALL SILT FENCE. SEE DETAIL B1/C-501.
5. FURNISH AND INSTALL SILT LOG. SEE DETAIL A1/C-501.
6. 4" TOP SOIL AND SOD AFTER TRENCH IS BACKFILLED.
7. PROPOSED 4'X4' CONCRETE VAULT WITH HS-20 RATED HYDRAULIC ASSIST LID. SEE DETAILS D1/C-502 AND A4/C-502.

LEGEND

XXXX	EXISTING CONTOUR
	EXISTING INSTALLATION PERIMETER FENCE
	EXISTING FLIGHT LINE SECURITY FENCE
W	EXISTING WATER LINE
SS	EXISTING SANITARY SEWER LINE
FM	EXISTING FORCE MAIN
SD	EXISTING STORM DRAIN
G	EXISTING GAS LINE
UGT	EXISTING UNDERGROUND TELECOM
UGE	EXISTING UNDERGROUND ELECTRIC
COMM	PROPOSED COMMUNICATION LINE
	FULL DEPTH SAWCUT
SF	SILT FENCE
	SILT LOG
	EXISTING CONCRETE PAVEMENT
	EXISTING CONCRETE PAVEMENT TO BE REMOVED AND REPLACED
	EXISTING GRASS AREA
	PROPOSED SOD
ME ± XX.XX	MATCH EXISTING ELEVATION

CAUTION!
EXISTING UNDERGROUND UTILITIES THIS LOCATION

AFMC
AIR FORCE MATERIEL COMMAND
72 ABW CIVIL ENGINEER DIRECTORATE
TINKER AFB, OK

11/05/2025
LICENSED PROFESSIONAL ENGINEER
RICHARD A. WHITE
28369
OKLAHOMA

PROJECT INFORMATION
WWYK240146
DESIGN & IMPLEMENT MONITORING & CONTROL SYSTEM FOR IWCS, B62516
TINKER AIR FORCE BASE, OKLAHOMA

REVISIONS

MARK	DATE	DESCRIPTION

MANAGEMENT INFORMATION
ISSUE DATE: 11/5/2025
DESIGN GROUP: HDR
DESIGNED BY: R. WHITE
DRAWN BY: G. GUERRA
CHECKED BY: B. WECKERLIN
DESIGN FILE LOCATION:

SHEET TITLE
CIVIL
SITE PLAN IW-LS-6 NORTH AND SOUTH

SHEET NUMBER
C-104

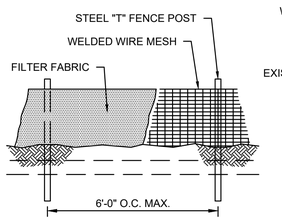

TYPICAL ELEVATION

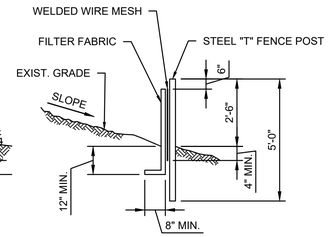

TYPICAL SECTION

SILT FENCE NOTES:

1. CLEAR THE GROUND OF DEBRIS, ROCKS, AND PLANTS (INCLUDING GRASSES TALLER THAN 2") SO THAT A SMOOTH SURFACE CAN BE UTILIZED FOR ANCHORING THE SKIRT.
2. LAY OUT THE SILT FENCE FOLLOWING AS CLOSELY AS POSSIBLE TO THE CONTOUR.
3. STEEL POSTS WHICH SUPPORT THE SILT FENCE SHALL BE INSTALLED ON A SLIGHT ANGLE TOWARD THE ANTICIPATED RUNOFF SOURCE. POST MUST BE EMBEDDED A MINIMUM OF ONE FOOT.
4. ATTACH THE 2" X 4" 12 GAUGE WELDED WIRE MESH TO THE "T" FENCE POSTS WITH 11 1/2 GAUGE GALVANIZED "T" POST CLIPS. THE TOP OF THE WIRE SHOULD BE 24" ABOVE GROUND LEVEL. THE WELDED WIRE MESH SHALL BE OVERLAPPED 6" AND TIED AT LEAST SIX TIMES WITH HOG RINGS.
5. THE TOE OF THE SILT FENCE SHALL BE TRENCHED-IN SO THAT THE DOWNSLOPE FACE OF THE TRENCH IS FLAT AND PERPENDICULAR TO THE LINE OF FLOW. WHERE THE SILT FENCE CAN NOT BE TRENCHED-IN (E.G. PAVEMENT), WEIGHT THE FABRIC FLAP WITH WASHED GRAVEL ON UPHILL SIDE TO PREVENT FLOW UNDER THE SILT FENCE.
6. SILT FENCE SHALL BE SECURELY FASTENED TO THE WOVEN WIRE MESH, WHICH IS IN TURN SECURELY ATTACHED TO THE STEEL FENCE POSTS.
7. SILT FENCE SPLICES SHOULD BE A MINIMUM OF 18" WIDE, ATTACHED IN AT LEAST SIX PLACES. SPLICES IN CONCENTRATED FLOW AREAS WILL NOT BE ACCEPTED.
8. INSPECTION SHALL BE MADE WEEKLY OR AFTER EACH RAINFALL EVENT AND REPAIR OR REPLACEMENT SHALL BE MADE PROMPTLY AS NEEDED.
9. ACCUMULATED SILT SHALL BE REMOVED WHEN IT REACHES A DEPTH OF 6 INCHES. THE SILT SHALL BE DISPOSED OF IN AN APPROVED SITE AND IN SUCH A MANNER AS TO NOT CONTRIBUTE TO ADDITIONAL SILTATION.
10. SILT FENCE SHALL BE REMOVED WHEN THE SITE IS COMPLETELY STABILIZED SO AS NOT TO BLOCK OR IMPEDE STORM FLOW OR DRAINAGE.
11. THE CONTRACTOR SHALL FIELD VERIFY THE TYPE, LOCATION, AND DEPTH OF ALL UTILITY CROSSINGS PRIOR TO CONSTRUCTION IN ORDER TO ADJUST THE PIPE GRADE IF NECESSARY AND AVOID DAMAGING THOSE UTILITIES. ADJUSTMENTS SHALL BE APPROVED BY THE ENGINEER.
12. INSTALL SILT FENCE AND TWO-FOOT WIDE VEGETATIVE FILTER MAT, ACROSS THE LIMITS OF CONSTRUCTION WHERE APPLICABLE, ALONG CONTOUR AT INTERVALS OF TEN VERTICAL FEET DOWNSLOPE OF ANY DISTURBANCE. WHEN THE SLOPE MEETS OR EXCEEDS 25%, OR WHERE DISTURBED AREA IS WITHIN FIFTY LINEAR FEET OF TOP OF BANK OF A WATER BODY, THE VEGETATIVE FILTER MAT SHALL BE INSTALLED WITH A 100% COVERAGE, IN ADDITION TO OTHER REQUIRED ENVIRONMENTAL PROTECTION MEASURES.

B1 / C-501 SILT FENCE DETIAL
SCALE: N.T.S.

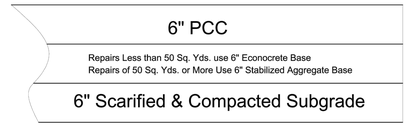

MATCH EXISTING CONCRETE THICKNESS

1. ALL MATERIALS, EQUIPMENT AND CONSTRUCTION SHALL CONFORM TO THE REQUIREMENTS OF THE OKLAHOMA DEPARTMENT OF TRANSPORTATION STANDARD SPECIFICATIONS FOR HIGHWAY CONSTRUCTION.
2. SUBGRADE SHALL BE COMPACTED TO 95% STANDARD DENSITY.
5. ALL FILL AND LOOSE MATERIAL BELOW 6" SUBGRADE LAYER SHALL BE COMPACTED TO 95% STANDARD DENSITY IN LIFTS NO GREATER THAN 6".

Tinker AFB, OK Standard Detail			
Appr. By:	Rev. BY:	Title: PCC Pavement Repair	
Appr. Date:	Rev. Date:	Rev. No.:	Detail No.: C-1

C3 / C-501 CONCRETE PAVEMENT REPAIR DETAIL
SCALE: N.T.S.

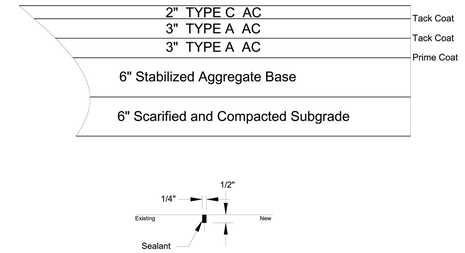

Joint Detail

1. ALL MATERIALS, EQUIPMENT AND CONSTRUCTION SHALL CONFORM TO THE REQUIREMENTS OF THE OKLAHOMA DEPARTMENT OF TRANSPORTATION STANDARD SPECIFICATIONS FOR HIGHWAY CONSTRUCTION.
2. SUBGRADE SHALL BE COMPACTED TO 95% STANDARD DENSITY.
3. ALL FILL AND LOOSE MATERIAL BELOW THE 6" MODIFIED SUBGRADE LAYER SHALL BE COMPACTED TO 95% STANDARD DENSITY IN LIFTS NO GREATER THAN 6".

Tinker AFB, OK Standard Detail			
Appr. By:	Rev. BY:	Title: 8" AC Repair	
Appr. Date:	Rev. Date:	Rev. No.:	Detail No.: A-4

C4 / C-501 ASPHALT PAVEMENT REPAIR DETAIL
SCALE: N.T.S.

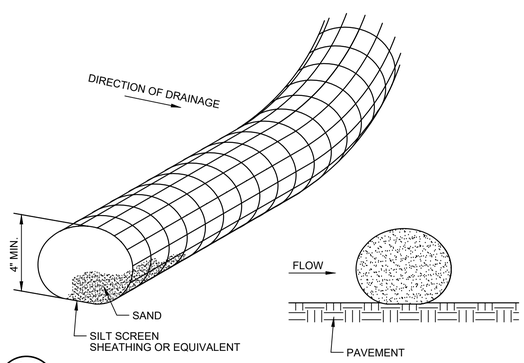

A1 / C-501 SILT LOG DETIAL
SCALE: NO SCALE

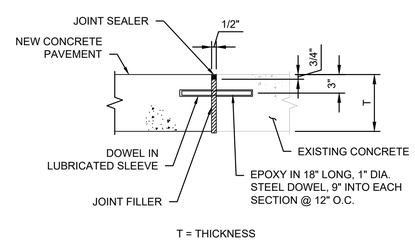

A3 / C-501 NEW TO EXIST. CONCRETE PAVEMENT JOINT DETAIL
SCALE: NO SCALE

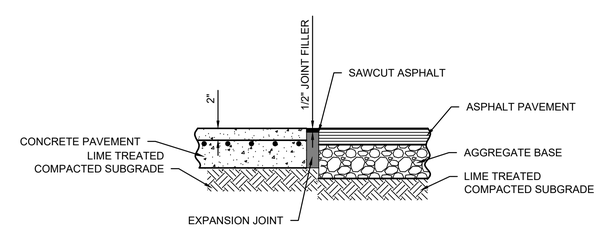

A4 / C-501 CONCRETE / ASPHALT PAVEMENT JOINT
SCALE: N.T.S.

AIR FORCE MATERIEL COMMAND
72 ABW CIVIL ENGINEER DIRECTORATE
TINKER AFB, OK

11/05/2025

LICENSED PROFESSIONAL ENGINEER
RICHARD A. WHITE
28369
OKLAHOMA

PROJECT INFORMATION
WWYK240146
DESIGN & IMPLEMENT MONITORING & CONTROL SYSTEM FOR IWCS, B62516
TINKER AIR FORCE BASE, OKLAHOMA

REVISIONS

MARK	DATE	DESCRIPTION

MANAGEMENT INFORMATION
ISSUE DATE: 11/5/2025
DESIGN GROUP: HDR
DESIGNED BY: R. WHITE
DRAWN BY: G. GUERRA
CHECKED BY: B. WECKERLIN
DESIGN FILE LOCATION:

SHEET TITLE
CIVIL SITE DETAILS

SHEET NUMBER
C-501

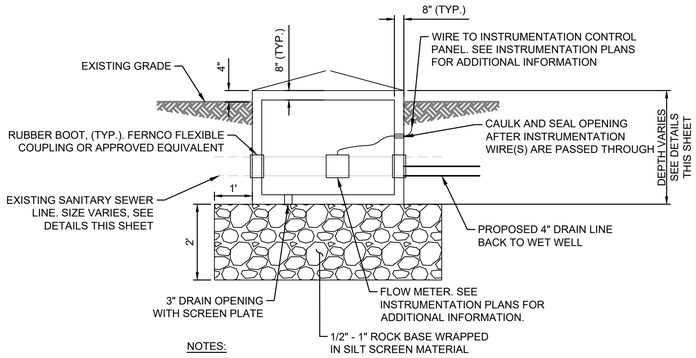

NOTES:

1. CONTRACTOR SHALL SUBMIT PLANS FROM STRUCTURAL ENGINEER REGISTERED IN STATE OF OKLAHOMA PRIOR TO VAULT ACCEPTANCE FOR CONSTRUCTION.

D1 / C-502 GENERAL CONCRETE VAULT DETAIL
SCALE: N.T.S.

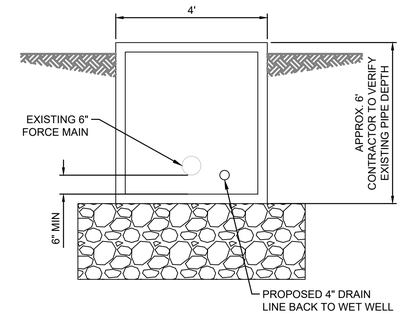

D4 / C-502 LS-10 CONCRETE VAULT DETAIL
SCALE: N.T.S.

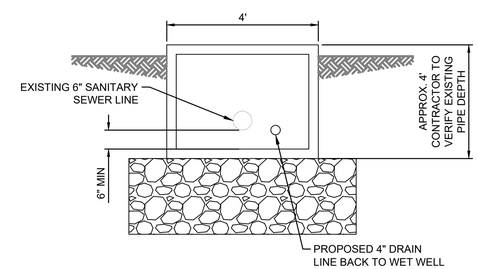

A4 / C-502 LS-6 NORTH CONCRETE VAULT DETAIL
SCALE: N.T.S.

AIR FORCE MATERIEL COMMAND
72 ABW CIVIL ENGINEER DIRECTORATE
TINKER AFB, OK

11/05/2025

LICENSED PROFESSIONAL ENGINEER
RICHARD A. WHITE
28369
OKLAHOMA

PROJECT INFORMATION
WWYK240146
DESIGN & IMPLEMENT MONITORING & CONTROL SYSTEM FOR IWCS, B62516
TINKER AIR FORCE BASE, OKLAHOMA

REVISIONS

MARK	DATE	DESCRIPTION

MANAGEMENT INFORMATION
ISSUE DATE: 11/5/2025
DESIGN GROUP: HDR
DESIGNED BY: R. WHITE
DRAWN BY: G. GUERRA
CHECKED BY: B. WECKERLIN
DESIGN FILE LOCATION:

SHEET TITLE
CIVIL CONCRETE VAULT DETAILS

SHEET NUMBER
C-502

GENERAL STRUCTURAL NOTES (GSN)

GENERAL

G1. SCOPE
THE NOTES ON THIS SHEET AND THE STANDARD STRUCTURAL DETAILS ARE GENERAL AND APPLY TO THE ENTIRE PROJECT WHETHER SPECIFICALLY CALLED OUT OR NOT, EXCEPT WHERE THERE ARE SPECIFIC INDICATIONS TO THE CONTRARY ON STRUCTURAL SHEETS. IF THERE ARE QUESTIONS, THEY SHALL BE SUBMITTED TO THE STRUCTURAL ENGINEER AND ANSWERED IN WRITING PRIOR TO CONSTRUCTION.

G2. APPLICABLE SPECIFICATIONS AND CODES
A. UFC 1-200-01 WITH CHANGE 4, DATED 17 DECEMBER 2024
B. UFC 3-301-01 WITH CHANGE 3, DATED 3 FEBRUARY 2025
C. INTERNATIONAL BUILDING CODE, IBC 2024 WITH APPLICABLE EDITIONS OF THE CODE REFERENCED STANDARDS.
D. TINKER AIR FORCE BASE FACILITY STANDARDS
E. ACI 318-19
F. ASCE 7-22

G3. EXISTING DRAWINGS
THE CONTRACTOR SHALL FIELD VERIFY ALL DIMENSIONS AND ELEVATIONS OF EXISTING CONSTRUCTION AS REQUIRED TO COORDINATE NEW CONSTRUCTION. SUBMIT REQUIRED CHANGES FOR APPROVAL. THE PLANS AND DETAILS FOR THE EXISTING STRUCTURES PRESENTED IN THE DRAWINGS ARE FOR REFERENCE ONLY BASED ON THE FOLLOWING AS-BUILT DRAWINGS:
1. "WWYK120068 REPAIR EXHAUST FAN MONITORING SYSTEM, B2122" DATED 07/06/2015.
2. "PROJECT #970244A BUILD ENGINE STAGING BUILDING" DATED 02/03/2000.
3. "AIRCRAFT PROTECTIVE COATING FACILITY: INDUSTRIAL WASTE TREATMENT PLANT" DATED DEC 1975.
4. "P13024 - TINKER AIR FORCE BASE OKLAHOMA CITY, OKLAHOMA CORROSION CONTROL HANGARS, BUILDING 2122" DATED 04/02/2015.
5. "KC-46A TWO-BAY DEPOT MAINTENANCE HANGAR" DATED APRIL 2017.
6. "CENTRAL UTILITIES COMPLEX-VEHICLE ASSEMBLY PLANT" DATED MARCH 13, 2001.

G4. DESIGN CRITERIA
1. APPLIES TO ALL STRUCTURES (UNO)
A. DEAD LOAD:
1. ACTUAL TRIBUTARY STRUCTURE WEIGHT
B. LIVE LOAD:
2. EQUIPMENT PADS — 100 PSF
C. WIND:
1. RISK CATEGORY: — II
2. ULTIMATE WIND SPEED; V_{ULT}: — 109 MPH
3. ALLOWABLE STRESS WIND SPEED; V_{ASD}: — 84 MPH
4. EXPOSURE: — C
5. DESIGN WIND PRESSURE: — 25 PSF
D. SEISMIC:
1. RISK CATEGORY: — II
2. IMPORTANCE FACTOR: — 1.0
3. SPECTRAL RESPONSE ACCELERATION, S_S = — 0.31g
4. SPECTRAL RESPONSE ACCELERATION, S_1 = — 0.08g
5. SITE CLASS: — D
6. SEISMIC DESIGN CATEGORY: — B
7. SPECTRAL RESPONSE COEFFICIENT, S_{DS} = — 0.23g
8. SPECTRAL RESPONSE COEFFICIENT, S_{D1} = — 0.11g
9. BASIC SEISMIC FORCE RESISTING SYSTEM: — SYSTEMS NOT SPECIFICALLY DETAILED FOR SEISMIC RESISTANCE
10. ANALYSIS PROCEDURE: — ASCE CHAPTER 13 - NON-STRUCTURAL COMPONENTS
11. SEISMIC DESIGN FORCE (MAX): — $1.6*S_{DS}*I_P*$WEIGHT
12. RESPONSE MODIFICATION FACTOR, Rp = — 2.5
13. COMPONENT AMPLIFICATION FACTOR, Ap = — 1.0
14. COMPONENT IMPORTANCE FACTOR, Ip = — 1.0

E. SNOW LOAD:
1. GROUND SNOW LOAD; P/g: — 18 PSF
2. FROST DEPTH: — 18 INCHES

F. ICE LOADS:
1. ICE THICKNESS: — 1.45 INCHES
2. ICE THICKNESS HEIGHT FACTOR: — 1.0
3. DESIGN ICE THICKNESS: — 1.5 INCHES
4. DESIGN WEIGHT OF ICE: — 7 PSF

G. ROOF RAIN LOAD:
1. 15-MINUTE PRECIPITATION INTENSITY: — 7.76 IN/HR
2. 60-MINUTE PRECIPITATION INTENSITY: — 3.91 IN/HR

G5. AT THE TIME OF THIS DESIGN, NO GEOTECHNICAL REPORT WAS PREPARED FOR THIS PROJECT. THEREFORE, THE ASSUMED SOIL PRESSURE PER IBC TABLE 1806.2 USED FOR DESIGN IS 1,500 PSF.

G6. SAFETY
SAFETY AND STRUCTURE STABILITY DURING CONSTRUCTION ARE THE SOLE RESPONSIBILITY OF THE CONTRACTOR. STRUCTURES HAVE BEEN DESIGNED TO RESIST THE DESIGN LIVE LOADS ONLY AS A COMPLETED STRUCTURE.

G7. OPENINGS
OPENINGS FOR PIPES, DUCTS, CONDUITS, ETC. ARE NOT ALL SHOWN ON THE STRUCTURAL DRAWINGS. COORDINATE AND PROVIDE OPENINGS AS REQUIRED TO ACCOMMODATE ALL WORK SHOWN OR SPECIFIED IN THE CONTRACT DOCUMENTS AND OTHERWISE REQUIRED FOR THE FURNISHING OF A FUNCTIONALLY COMPLETE PROJECT. REINFORCE AROUND OPENINGS PER STANDARD STRUCTURAL DETAILS UNLESS OTHERWISE SHOWN.

G8. SPECIAL INSPECTIONS
THE CONTRACTOR MUST EMPLOY ONE OR MORE APPROVED AGENCIES TO PERFORM INSPECTIONS DURING CONSTRUCTION ON THE TYPES OF WORK LISTED UNDER SECTION 1705 OF THE IBC REQUIRING VERIFICATION AND INSPECTION. THESE INSPECTIONS ARE IN ADDITION TO THE INSPECTIONS DEFINED IN SECTION 110. THE INSPECTING AGENCY MUST PROVIDE REPORTS OF THE SPECIAL INSPECTIONS DIRECTLY TO THE CONTRACTING OFFICER.

G9. STANDARD DETAILS
THE STANDARD DETAILS DEPICT TYPICAL DETAILING TO BE USED ON THIS PROJECT. IF CONDITIONS ARE NOT EXPLICITLY SHOWN ON THE DRAWINGS THEY SHALL BE MADE SIMILAR TO THE STANDARD DETAILS. OBTAIN APPROVAL OF ENGINEER IN WRITING FOR SIMILAR CONDITIONS PRIOR TO CONSTRUCTION.

G10. THE CONTRACTOR SHALL FIELD VERIFY ALL DIMENSIONS AND ELEVATIONS OF EXISTING CONSTRUCTION AS REQUIRED TO COORDINATE NEW CONSTRUCTION. SUBMIT REQUIRED CHANGES FOR APPROVAL.

G11. CONTRACTOR TO SUBMIT FOR REVIEW ALL EQUIPMENT SIZES, OPERATING WEIGHTS, VIBRATION FORCES, SUPPORT LOCATIONS, ALONG WITH ANY FLOOR OPENINGS, NOTCHES, AND RECESSES REQUIRED BY SUCH EQUIPMENT. CONCRETE SUPPORT PADS AND/OR FRAMING REQUIRED TO SUPPORT SAID EQUIPMENT SHALL NOT BE FABRICATED AND PLACED UNTIL THE CONCRETE SUPPORT PADS AND/OR FRAMING IS APPROVED TO SUPPORT THE EQUIPMENT.

CONCRETE

C1. DESIGN STRENGTHS:
F'c = 4,500 PSI
Fy = 60,000 PSI

C2. CONCRETE COVER
UNLESS OTHERWISE NOTED, PROVIDE CONCRETE COVER FOR REINFORCING AS FOLLOWS:
CONCRETE DEPOSITED AGAINST EARTH: 3"
CONCRETE IN CONTACT WITH GROUND: 1 1/2"
CONCRETE NOT IN CONTACT WITH GROUND:
SLABS: 3/4"
BEAMS: 1 1/2"
SEE DRAWINGS FOR EXCEPTIONS

C3. SEE SPECIFICATIONS FOR REINFORCING PLACEMENT REQUIREMENTS.

C4. REFER TO OTHER DISCIPLINE DRAWINGS PRIOR TO CONSTRUCTION FOR EMBEDDED ITEMS AND PENETRATIONS NOT SHOWN ON STRUCTURAL DRAWINGS AS REQUIRED TO ACCOMMODATE ALL WORK SHOWN OR SPECIFIED IN THE CONTRACT DOCUMENTS AND OTHERWISE REQUIRED FOR THE FURNISHING OF A FUNCTIONALLY COMPLETE PROJECT. REINFORCE AROUND OPENINGS PER STANDARD STRUCTURAL DETAILS UNLESS OTHERWISE SHOWN.

C5. PROVIDE 3/4" CHAMFERS AT ALL EXPOSED EDGES. NOT ALL CHAMFERS MAY BE SHOWN ON DRAWINGS.

C6. FIELD ADJUST REINFORCING AT OPENINGS AND EMBEDDED ITEMS AS INDICATED.

C7. ANCHOR BOLTS NOT SPECIFIED BY ENGINEER SHALL BE DESIGNED AND CERTIFIED BY A REGISTERED PROFESSIONAL ENGINEER LICENSED IN THE STATE OF OKLAHOMA, RETAINED BY THE CONTRACTOR, IN ACCORDANCE WITH APPLICABLE PROJECT AND CODE REQUIREMENTS. SUBMIT AS A SHOP DRAWING FOR REVIEW AND APPROVAL BY THE ENGINEER. COORDINATE LOCATION, SIZE AND EMBEDMENT PRIOR TO CASTING CONCRETE.

C8. ABSOLUTELY NO WELDING OF REINFORCING BARS OR TORCHING TO BEND REINFORCING BARS SHALL BE ALLOWED.

C9. CONTRACTOR SHALL SUBMIT A CONCRETE PLACEMENT PLAN IDENTIFYING JOINT TYPES, JOINT LOCATIONS AND CONCRETE PLACEMENT SEQUENCE.

C10. ALL CAST IN PLACE AND POST-INSTALLED ANCHORS INDICATED IN THE STRUCTURAL DOCUMENTS SHALL COMPLY WITH CHAPTER 17 OF ACI 318 AND CHAPTER 19 OF THE IBC. ALL EXPANSION AND ADHESIVE ANCHORS SHALL HAVE THE ICC REPORT SHOWING EQUIVALENT LOAD CAPACITY. SUBMIT AND INSTALL PER THE ICC EVALUATION REPORT.

POST INSTALLED ANCHORS

P1. POST-INSTALLED ANCHORS SHALL INCLUDE ADHESIVE ANCHORS (THREADED RODS, BOLTS OR REINFORCING BARS), EXPANSION ANCHORS, AND UNDERCUT ANCHORS INSTALLED INTO HARDENED CONCRETE.

P2. POST-INSTALLED ANCHORS SHALL ONLY BE USED WHERE INDICATED ON THE DRAWINGS. CONTRACTOR SHALL OBTAIN APPROVAL FROM ENGINEER PRIOR TO USING POST-INSTALLED ANCHORS FROM MISSING OR MISPLACED CAST-IN-PLACE ANCHORS.

P3. CARE SHOULD BE TAKEN TO AVOID CONFLICTS WITH EXISTING REINFORCING STEEL AND OTHER EMBEDDED ITEMS WHEN DRILLING HOLES. REINFORCING BARS SHALL NOT BE DAMAGED DURING DRILLING OR ANCHOR INSTALLATION. HOLES SHALL BE DRILLED AND CLEANED PER THE PRODUCT MANUFACTURER'S INSTRUCTIONS. ANCHORS SHALL BE INSTALLED PER THE PRODUCT MANUFACTURER'S INSTRUCTIONS AT NOT LESS THAN MINIMUM EDGE DISTANCES AND/OR SPACING INDICATED IN THE MANUFACTURER'S LITERATURE.

P4. SUBSTITUTION REQUESTS FOR PRODUCTS OTHER THAN THOSE INDICATED ON THE DRAWINGS SHALL BE SUBMITTED TO ENGINEER FOR REVIEW AND APPROVAL. CURRENT PRODUCT ICC-ESR EVALUATION REPORTS SHALL BE INCLUDED WITH THE SUBMITTAL PACKAGE. IF METHODS AND PROCEDURES REQUIRED BY THE BUILDING CODE MAY BE REQUIRED AS PART OF THE SUBMITTAL PACKAGE.

P5. UNLESS NOTES OTHERWISE, THE MINIMUM EMBEDMENT PROVIDED FOR ADHESIVE ANCHORED REINFORCING BARS SHALL DEVELOP THE FULL TENSILE STRENGTH OF THE BARS.

P6. SPECIAL INSPECTION WILL BE PROVIDED FOR ALL POST-INSTALLED ANCHORS AS INDICATED IN SPECIAL INSPECTION REQUIREMENTS PER SPECIFICATION SECTION 05 05 20.

DEFERRED SUBMITTALS:

1. DEFINITION:

DELEGATE DESIGN SUBMITTALS ARE ITEMS FOR WHICH THE FINAL DESIGN OF A SPECIFIC ELEMENT OF THE PERMANENT CONSTRUCTION WORK EXPRESSLY DELEGATED TO A PROPERLY LICENSED AND REGISTERED DESIGN PROFESSIONAL LICENSED IN THE STATE OF OKLAHOMA RETAINED OR EMPLOYED BY THE CONTRACTOR, SUBCONTRACTOR, SUPPLIER OF ANY TIER. "DELEGATED DESIGN" APPLIES ONLY TO PERMANENT WORK THAT WILL BE PART OF THE COMPLETED PROJECT AS A FUNCTIONING WHOLE.

2. DELEGATED DESIGN LIST:

THE FOLLOWING IS A LIST OF DEFERRED SUBMITTALS THAT ARE EXPECTED TO CONTAIN STRUCTURAL CALCULATIONS OF SAFETY-RELATED SYSTEM INFORMATION FOR REVIEW. THESE SUBMITTALS APPLY TO DELEGATED DESIGN SYSTEMS PRIOR TO INSTALLATION OF THE INDICATED STRUCTURAL ELEMENT, EQUIPMENT, DISTRIBUTION SYSTEM, COMPONENT OR ITS ANCHORAGE. THE CONTRACTOR SHALL SUBMIT THE REQUIRED ENGINEER CERTIFICATION, SUPPORTING DATA, AND DRAWINGS FOR REVIEW AND ACCEPTANCE BY THE CONTRACTING OFFICER.

DEFERRED SUBMITTALS

SPEC SECTIONS	ITEM
VARIOUS	ANY EQUIPMENT OR COMPONENT IN WHICH A TECHNICAL SPECIFICATION REQUIRES SUBMITTAL OF EQUIPMENT OR ANCHORAGE SYSTEM CALCULATIONS

MODIFICATIONS TO EXISTING CONCRETE:

EC1. DRILLED HOLE FOR DOWEL SHALL BE THOROUGHLY CLEANED BY WIRE BRUSHING AND AIR PRESSURE OR VACUUM TO REMOVE ALL DRILLING DUST. THE HOLE SHALL THEN BE PARTIALLY FILLED WITH EPOXY AND THE UNCOATED BAR INSERTED, TWISTED AND LEFT IN PLACE.

EC2. AT LOCATIONS WHERE NEW PENETRATIONS FOR CONDUITS ARE REQUIRED, CONTRACTOR SHALL NON-DESTRUCTIVELY LOCATED EXISTING REINFORCING PRIOR TO DRILLING HOLES. LOCATE CONDUITS TO NOT DAMAGE REINFORCING.

EC3. NEW OPENINGS IN EXISTING CONCRETE SHALL BE CUT 1 INCH OVERSIZE, COATED WITH EPOXY BONDING COMPOUND, AND MORTAR FINISHED TO THE REQUIRED FINISH SIZE.

EC4. STRUCTURAL DIMENSIONS RELATED TO OR CONTROLLED BY EXISTING STRUCTURES SHALL BE VERIFIED IN FIELD BY THE CONTRACTOR PRIOR TO CONCRETE WORK.

AIR FORCE MATERIEL COMMAND
72 ABW CIVIL ENGINEER DIRECTORATE
TINKER AFB, OK

LICENSED PROFESSIONAL ENGINEER
COLIN J MULDERICK
34849
OKLAHOMA
11/05/2025

PROJECT INFORMATION
WWYK240146
DESIGN & IMPLEMENT MONITORING & CONTROL SYSTEM FOR IWCS, B62516
TINKER AIR FORCE BASE, OKLAHOMA

REVISIONS

MARK	DATE	DESCRIPTION

MANAGEMENT INFORMATION
ISSUE DATE: 11/05/2025
DESIGN GROUP: HDR
DESIGNED BY: C. MULDERICK
DRAWN BY: R. NELSON
CHECKED BY: K. TEEMSMA
DESIGN FILE LOCATION:

SHEET TITLE
GENERAL NOTES

SHEET NUMBER
S-001

REMOVE EXISTING RTU PANEL AND LOCATE NEW PANEL IN THIS LOCATION.

01 YD101 EXISTING CONDITIONS AND DEMOLITION PLANS IW-LS-3
SCALE: NTS

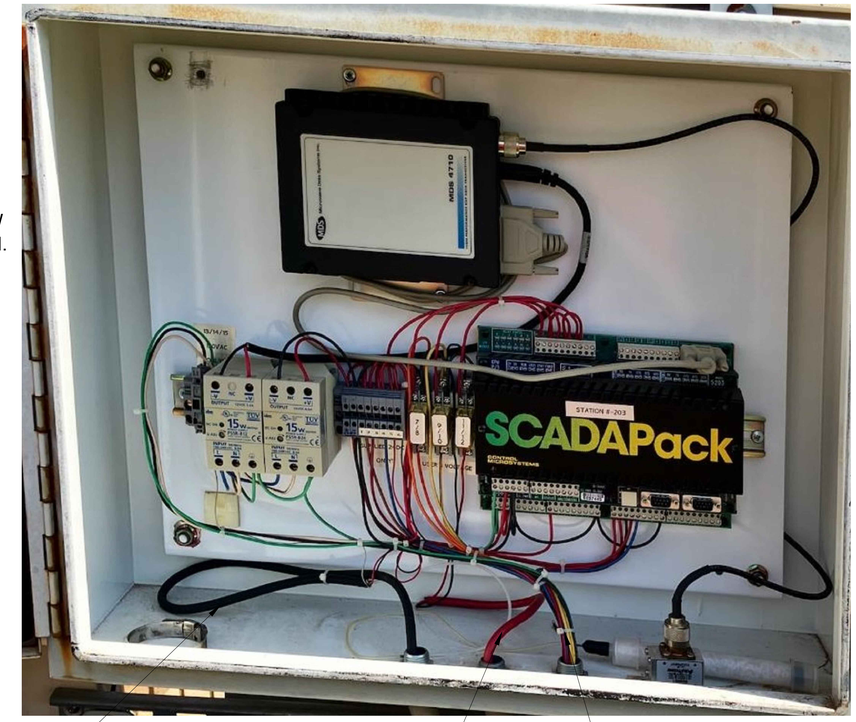

RETAIN WETWELL LEVEL PRESSURE TRANSDUCER (PT) ANALOG IN FIELD WIRING

RETAIN WETWELL LEVEL PRESSURE TRANSDUCER (PT) DISCRETE OUT FIELD WIRING

RETAIN FIELD WIRING LISTED IN TABLE BELOW

NOTES:
1: CONTRACTOR TO CONFIRM FIELD CONNECTIONS WITH CLIENT BEFORE REMOVAL OF ANY EXISTING EQUIPMENT.

FIELD CONNECTION	SIGNAL TYPE	EXISTING SCADAPACK CONNECTION
PUMP 1 START	DO	DO1
PUMP 2 START	DO	DO2
MONACO ALARM	DO	DO3
WETWELL PT	DO	DO4
PUMP 1 ON	DI	DI0
PUMP 2 ON	DI	DI1
PUMP 1 FAULT	DI	DI2
PUMP 2 FAULT	DI	DI3
FAULT RELAY	DI	DI4
WETWELL PT	AI	AI0

02 YD101 EXISTING PANEL WIRING AND DEMOLITION PLANS IW-LS-3
SCALE: NTS

AIR FORCE MATERIEL COMMAND
72 ABW CIVIL ENGINEER DIRECTORATE
TINKER AFB, OK

LICENSED PROFESSIONAL ENGINEER
STEPHEN HORRAS
35430
OKLAHOMA
11/05/25

PROJECT INFORMATION
WWYK240146
DESIGN & IMPLEMENT MONITORING & CONTROL SYSTEM FOR IWCS, B62516
TINKER AIR FORCE BASE, OKLAHOMA

REVISIONS

MARK	DATE	DESCRIPTION

MANAGEMENT INFORMATION
ISSUE DATE: 11/5/2025
DESIGN GROUP: HDR
DESIGNED BY:S. HORRAS
DRAWN BY:A. HECK
CHECKED BY:P. KAPADIA
DESIGN FILE LOCATION:

SHEET TITLE
INSTRUMENTATION DEMO DETAILS IW-LS-3

SHEET NUMBER
YD101

UPDATE 24VDC POWER SUPPLY TO PROVIDE 24VDC TO NEW RTU PANEL

RELAYS TO REMAIN FOR PUMP CONTROL. TO BE CONTROLLED BY THE NEW RTU.

REMOVE AND LOCATE NEW RTU PANEL HERE.

REMOVE EXISTING RTU AND RADIO.

CPT TO REMAIN. CONFIRMING SIZING FOR NEW 24VDC POWER SUPPLY.

01 YD102 EXISTING CONDITIONS AND DEMOLITION PLANS IW-LS-10
SCALE: NTS

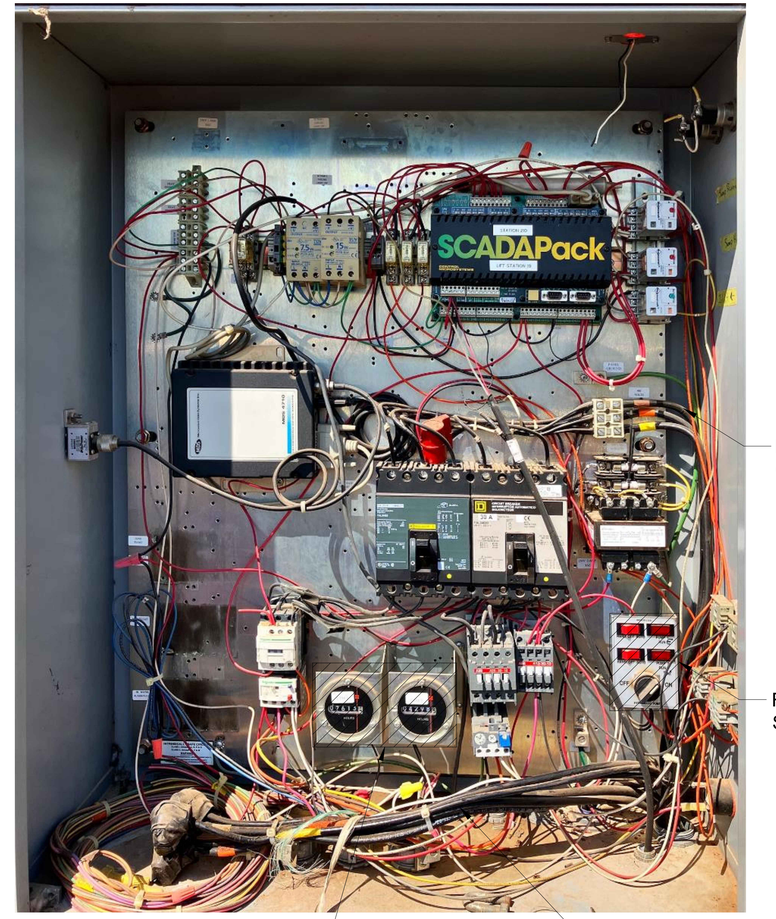

RETAIN 480VAC CABLE

REMOVE HOA SWITCH

REMOVE RUNTIME DISPLAY

RETAIN FIELD WIRING FOR PUMPS AND PRESSURE TRANSMITTERS (PT) LISTED IN TABLE BELOW

NOTES:
1: CONTRACTOR TO CONFIRM FIELD CONNECTIONS WITH CLIENT BEFORE REMOVAL OF ANY EXISTING EQUIPMENT.

FIELD CONNECTION	SIGNAL TYPE	EXISTING SCADAPACK CONNECTION
PUMP 1 START	DO	DO1
PUMP 2 START	DO	DO2
PUMP SEAL FAIL	DO	DO3
PUMP 1 ON	DI	DI0
PUMP 2 ON	DI	DI1
HIGH LEVEL	DI	DI14
PUMP RUN	DI	DI15

02 YD102 EXISTING PANEL WIRING AND DEMOLITION PLANS IW-LS-10
SCALE: NTS

AIR FORCE MATERIEL COMMAND
72 ABW CIVIL ENGINEER DIRECTORATE
TINKER AFB, OK

LICENSED PROFESSIONAL ENGINEER
STEPHEN HORRAS
35430
OKLAHOMA
11/05/25

PROJECT INFORMATION
WWYK240146
DESIGN & IMPLEMENT MONITORING & CONTROL SYSTEM FOR IWCS, B62516
TINKER AIR FORCE BASE, OKLAHOMA

REVISIONS

MARK	DATE	DESCRIPTION

MANAGEMENT INFORMATION
ISSUE DATE: 11/5/2025
DESIGN GROUP: HDR
DESIGNED BY:S. HORRAS
DRAWN BY:A. HECK
CHECKED BY:P. KAPADIA
DESIGN FILE LOCATION:

SHEET TITLE
INSTRUMENTATION DEMO DETAILS IW-LS-10

SHEET NUMBER
YD102

REMOVE EXISTING RTU PANEL AND
LOCATE NEW PANEL IN THIS LOCATION.

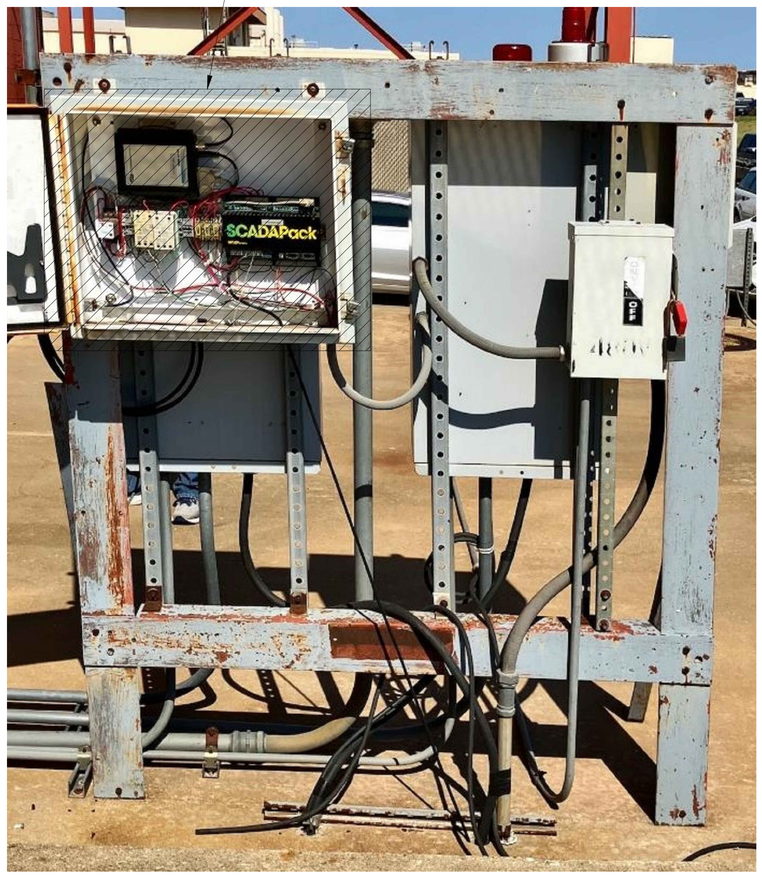

01 YD103 EXISTING CONDITIONS AND DEMOLITION PLANS IW-LS-2280
SCALE: NTS

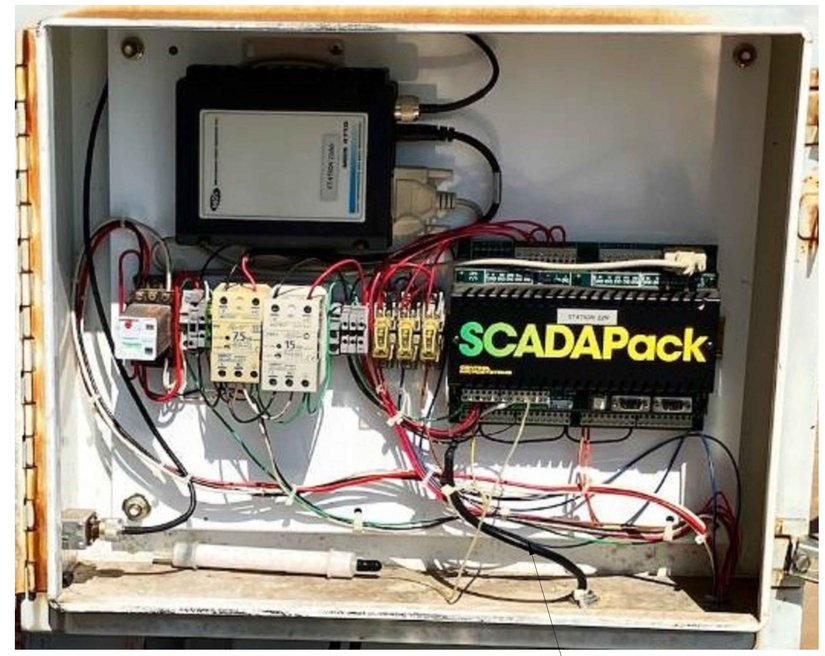

RETAIN FIELD WIRING FOR
PUMPS AND PRESSURE
TRANSMITTERS (PT) LISTED
IN TABLE BELOW

NOTES:
1: CONTRACTOR TO CONFIRM FIELD CONNECTIONS WITH CLIENT BEFORE REMOVAL OF ANY EXISTING EQUIPMENT.

FIELD CONNECTION	SIGNAL TYPE	EXISTING SCADAPACK CONNECTION
PUMP 1 START	DO	DO1
PUMP 2 START	DO	DO2
MONACO ALARM	DO	DO3
WETWELL PT	DO	DO4
PUMP 1 ON	DI	DI0
PUMP 2 ON	DI	DI1

02 YD103 EXISTING PANEL WIRING AND DEMOLITION PLANS IW-LS-2280
SCALE: NTS

AFMC
AIR FORCE MATERIEL COMMAND
72 ABW CIVIL ENGINEER DIRECTORATE
TINKER AFB, OK

LICENSED PROFESSIONAL ENGINEER
STEPHEN HORRAS
35430
OKLAHOMA
11/05/25

PROJECT INFORMATION
WWYK240146
DESIGN & IMPLEMENT MONITORING
& CONTROL SYSTEM FOR IWCS, B62516
TINKER AIR FORCE BASE, OKLAHOMA

REVISIONS

MARK	DATE	DESCRIPTION

MANAGEMENT INFORMATION
ISSUE DATE: 11/5/2025
DESIGN GROUP: HDR
DESIGNED BY:S. HORRAS
DRAWN BY:A. HECK
CHECKED BY:P. KAPADIA
DESIGN FILE LOCATION:

SHEET TITLE
INSTRUMENTATION
DEMO DETAILS
IW-LS-2280

SHEET NUMBER
YD103

REMOVE EXISTING RTU PANEL AND LOCATE NEW PANELS IN THIS LOCATION.

01 YD104 EXISTING CONDITIONS AND DEMOLITION PLANS IW-LS-6N & IW-LS-6S

SCALE: NTS

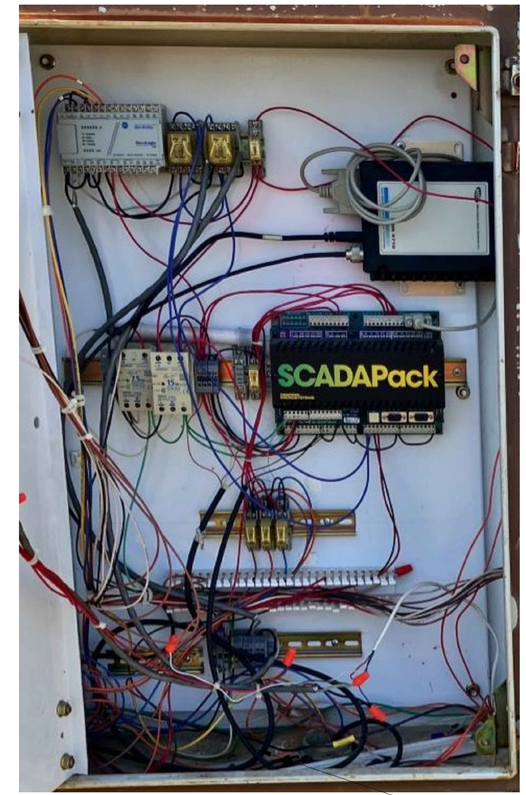

RETAIN FIELD WIRING FOR PUMPS AND PRESSURE TRANSMITTERS (PT) LISTED IN TABLE BELOW FOR WET WELL NORTH (WWN) AND WET WELL SOUTH (WWS)

NOTES:

1: CONTRACTOR TO CONFIRM FIELD CONNECTIONS WITH CLIENT BEFORE REMOVAL OF ANY EXISTING EQUIPMENT.

FIELD CONNECTION	SIGNAL TYPE	EXISTING SCADAPACK CONNECTION
WWN PUMP 1 START	DO	DO11
WWN PUMP 2 START	DO	DO10
WWS PUMP 1 START	DO	DO9
WWS PUMP 2 START	DO	DO8
WETWELL NORTH PT	DO	DO2
WETWELL SOUTH PT	DO	DO3
WWN PUMP 1 ON	DI	DI0
WWN PUMP 2 ON	DI	DI1
WWS PUMP 1 ON	DI	DI2
WWS PUMP 2 ON	DI	DI3
WETWELL NORTH PT	AI	AI0
WETWELL SOUTH PT	AI	AI1

02 YD104 EXISTING PANEL WIRING AND DEMOLITION PLANS IW-LS-6N & IW-LS-6S

SCALE: NTS

AFMC
AIR FORCE MATERIEL COMMAND
72 ABW CIVIL ENGINEER DIRECTORATE
TINKER AFB, OK

LICENSED PROFESSIONAL ENGINEER
STEPHEN HORRAS
35430
OKLAHOMA
11/05/25

PROJECT INFORMATION
WWYK240146
DESIGN & IMPLEMENT MONITORING & CONTROL SYSTEM FOR IWCS, B62516
TINKER AIR FORCE BASE, OKLAHOMA

REVISIONS

MARK	DATE	DESCRIPTION

MANAGEMENT INFORMATION
ISSUE DATE: 11/5/2025
DESIGN GROUP: HDR
DESIGNED BY:S. HORRAS
DRAWN BY:A. HECK
CHECKED BY:P. KAPADIA
DESIGN FILE LOCATION:

SHEET TITLE
INSTRUMENTATION DEMO DETAILS IW-LS-6N & IW-LS-6S

SHEET NUMBER
YD104

01
Y-101
SITE PLAN IW-LS-3
SCALE:1"=20'

0 20' 40'

GENERAL NOTES:

1. CONTRACTOR TO VERIFY LOCATIONS OF EXISTING UTILITIES AND ALL SURVEY INFORMATION PRIOR TO CONSTRUCTION.
2. CONTRACTOR SHALL ADJUST MANHOLES AND VALVE BOXES WITHIN PROJECT LIMIT TO FINISH GRADE.
3. ALL PENETRATIONS ARE TO BE SEALED WITH APPROPRIATE SEALANT OR FIRESTOPPING SPECIFIC TO ASSEMBLY BEING PENETRATED. ALL PENETRATIONS TO BE SEALED, TYPICAL.

KEY NOTES:

1. SEE CIVIL PLANS SHEET: WWYK240146 C-101 FOR ADDITIONAL INFORMATION AND FOR CONTINUATION OF LINE OUT OF BUILDING 214.
2. SEE STRUCTURAL PLANS SHEET: WWYK240146 S-001 NOTES: G10, AND EC1-EC4, FOR ADDITIONAL INFORMATION FOR WALL PENETRATION.
3. HONEYWELL PANEL LOCATED ON THE SECOND FLOOR OF BUILDING 214. SEE SHEET Y-201 FOR DETAILED LOCATION OF THE HONEYWELL PANEL.
4. CONDUIT TO RUN ALONG EXTERIOR OF BUILDING NEXT TO EXISTING CONDUIT.

LEGEND:

——COMM—— PROPOSED COMM LINE

AIR FORCE MATERIEL COMMAND
72 ABW CIVIL ENGINEER DIRECTORATE
TINKER AFB, OK

LICENSED PROFESSIONAL ENGINEER
STEPHEN HORRAS
35430
OKLAHOMA
11/05/25

PROJECT INFORMATION
WWYK240146
DESIGN & IMPLEMENT MONITORING & CONTROL SYSTEM FOR IWCS, B62516
TINKER AIR FORCE BASE, OKLAHOMA

REVISIONS

MARK	DATE	DESCRIPTION

MANAGEMENT INFORMATION
ISSUE DATE: 11/5/2025
DESIGN GROUP: HDR
DESIGNED BY:S. HORRAS
DRAWN BY:A. HECK
CHECKED BY:P. KAPADIA
DESIGN FILE LOCATION:

SHEET TITLE
INSTRUMENTATION SITE PLAN IW-LS-3

SHEET NUMBER
Y-101

01
Y-102
SITE PLAN IW-LS-10
SCALE:1"=20'

0 20' 40'

GENERAL NOTES:

1. CONTRACTOR TO VERIFY LOCATIONS OF EXISTING UTILITIES AND ALL SURVEY INFORMATION PRIOR TO CONSTRUCTION.
2. CONTRACTOR SHALL ADJUST MANHOLES AND VALVE BOXES WITHIN PROJECT LIMIT TO FINISH GRADE.
3. ALL PENETRATIONS ARE TO BE SEALED WITH APPROPRIATE SEALANT OR FIRESTOPPING SPECIFIC TO ASSEMBLY BEING PENETRATED. ALL PENETRATIONS TO BE SEALED, TYPICAL.

KEY NOTES:

1. SEE CIVIL PLANS SHEET: WWYK240146 C-102 FOR ADDITIONAL INFORMATION AND FOR CONTINUATION OF LINE OUT OF BUILDING 3706.
2. SEE STRUCTURAL PLANS SHEET: WWYK240146 S-001 NOTES: G10, AND EC1-EC4, FOR ADDITIONAL INFORMATION FOR WALL PENETRATION.
3. HONEYWELL PANEL LOCATED ON THE SECOND FLOOR OF BUILDING 3706. SEE SHEET Y-202 FOR DETAILED LOCATION OF THE HONEYWELL PANEL.
4. CONDUIT TO RUN ALONG INTERIOR OF BUILDING.

LEGEND:

COMM — PROPOSED COMM LINE

AFMC
AIR FORCE MATERIEL COMMAND
72 ABW CIVIL ENGINEER DIRECTORATE
TINKER AFB, OK

LICENSED PROFESSIONAL ENGINEER
STEPHEN HORRAS
35430
OKLAHOMA
11/05/25

PROJECT INFORMATION
WWYK240146
DESIGN & IMPLEMENT MONITORING & CONTROL SYSTEM FOR IWCS, B62516
TINKER AIR FORCE BASE, OKLAHOMA

REVISIONS

MARK	DATE	DESCRIPTION

MANAGEMENT INFORMATION
ISSUE DATE: 11/5/2025
DESIGN GROUP: HDR
DESIGNED BY:S. HORRAS
DRAWN BY:A. HECK
CHECKED BY:P. KAPADIA
DESIGN FILE LOCATION:

SHEET TITLE
INSTRUMENTATION SITE PLAN IW-LS-10

SHEET NUMBER
Y-102

01
Y-103
SITE PLAN IW-LS-2280
SCALE:1"=20'

0 20' 40'

GENERAL NOTES:

1. CONTRACTOR TO VERIFY LOCATIONS OF EXISTING UTILITIES AND ALL SURVEY INFORMATION PRIOR TO CONSTRUCTION.
2. CONTRACTOR SHALL ADJUST MANHOLES AND VALVE BOXES WITHIN PROJECT LIMIT TO FINISH GRADE.
3. ALL PENETRATIONS ARE TO BE SEALED WITH APPROPRIATE SEALANT OR FIRESTOPPING SPECIFIC TO ASSEMBLY BEING PENETRATED. ALL PENETRATIONS TO BE SEALED, TYPICAL.

KEY NOTES:

1. SEE CIVIL PLANS SHEET: WWYK240146 C-103 FOR ADDITIONAL INFORMATION AND FOR CONTINUATION OF LINE OUT OF BUILDING 2280.
2. SEE STRUCTURAL PLANS SHEET: WWYK240146 S-001 NOTES: G10, AND EC1-EC4, FOR ADDITIONAL INFORMATION FOR WALL PENETRATION.
3. HONEYWELL PANEL LOCATED ON THE SECOND FLOOR OF BUILDING 2280. SEE SHEET Y-203 FOR DETAILED LOCATION OF THE HONEYWELL PANEL.
4. CONDUIT TO RUN ALONG EXTERIOR OF BUILDING NEXT TO EXISTING CONDUIT.

LEGEND:

——COMM—— PROPOSED COMM LINE

AIR FORCE MATERIEL COMMAND
72 ABW CIVIL ENGINEER DIRECTORATE
TINKER AFB, OK

LICENSED PROFESSIONAL ENGINEER
STEPHEN HORRAS
35430
OKLAHOMA
11/05/25

PROJECT INFORMATION
WWYK240146
DESIGN & IMPLEMENT MONITORING & CONTROL SYSTEM FOR IWCS, B62516
TINKER AIR FORCE BASE, OKLAHOMA

REVISIONS

MARK	DATE	DESCRIPTION

MANAGEMENT INFORMATION
ISSUE DATE: 11/5/2025
DESIGN GROUP: HDR
DESIGNED BY:S. HORRAS
DRAWN BY:A. HECK
CHECKED BY:P. KAPADIA
DESIGN FILE LOCATION:

SHEET TITLE
INSTRUMENTATION SITE PLAN IW-LS-2280

SHEET NUMBER
Y-103

01
Y-104
SITE PLAN IW-LS-6N & IW-LS-6S
SCALE:1"=30'

GENERAL NOTES:

1. CONTRACTOR TO VERIFY LOCATIONS OF EXISTING UTILITIES AND ALL SURVEY INFORMATION PRIOR TO CONSTRUCTION.
2. CONTRACTOR SHALL ADJUST MANHOLES AND VALVE BOXES WITHIN PROJECT LIMIT TO FINISH GRADE.
3. ALL PENETRATIONS ARE TO BE SEALED WITH APPROPRIATE SEALANT OR FIRESTOPPING SPECIFIC TO ASSEMBLY BEING PENETRATED. ALL PENETRATIONS TO BE SEALED, TYPICAL.

KEY NOTES:

1. SEE CIVIL PLANS SHEET: WWYK240146 C-104 FOR ADDITIONAL INFORMATION AND FOR CONTINUATION OF LINE OUT OF BUILDING 2136.
2. SEE STRUCTURAL PLANS SHEET: WWYK240146 S-001 NOTES: G10, AND EC1-EC4, FOR ADDITIONAL INFORMATION FOR WALL PENETRATION.
3. HONEYWELL PANEL LOCATED ON THE SECOND FLOOR OF BUILDING 2136. SEE SHEET Y-204 FOR DETAILED LOCATION OF THE HONEYWELL PANEL.

LEGEND:

—COMM—	PROPOSED COMM LINE
—X—	FLIGHT LINE FENCE

AIR FORCE MATERIEL COMMAND
72 ABW CIVIL ENGINEER DIRECTORATE
TINKER AFB, OK

LICENSED PROFESSIONAL ENGINEER
STEPHEN HORRAS
35430
OKLAHOMA
11/05/25

PROJECT INFORMATION
WWYK240146
DESIGN & IMPLEMENT MONITORING & CONTROL SYSTEM FOR IWCS, B62516
TINKER AIR FORCE BASE, OKLAHOMA

REVISIONS

MARK	DATE	DESCRIPTION

MANAGEMENT INFORMATION
ISSUE DATE: 11/5/2025
DESIGN GROUP: HDR
DESIGNED BY:S. HORRAS
DRAWN BY:A. HECK
CHECKED BY:P. KAPADIA
DESIGN FILE LOCATION:

SHEET TITLE
INSTRUMENTATION SITE PLAN IW-LS-6

SHEET NUMBER
Y-104

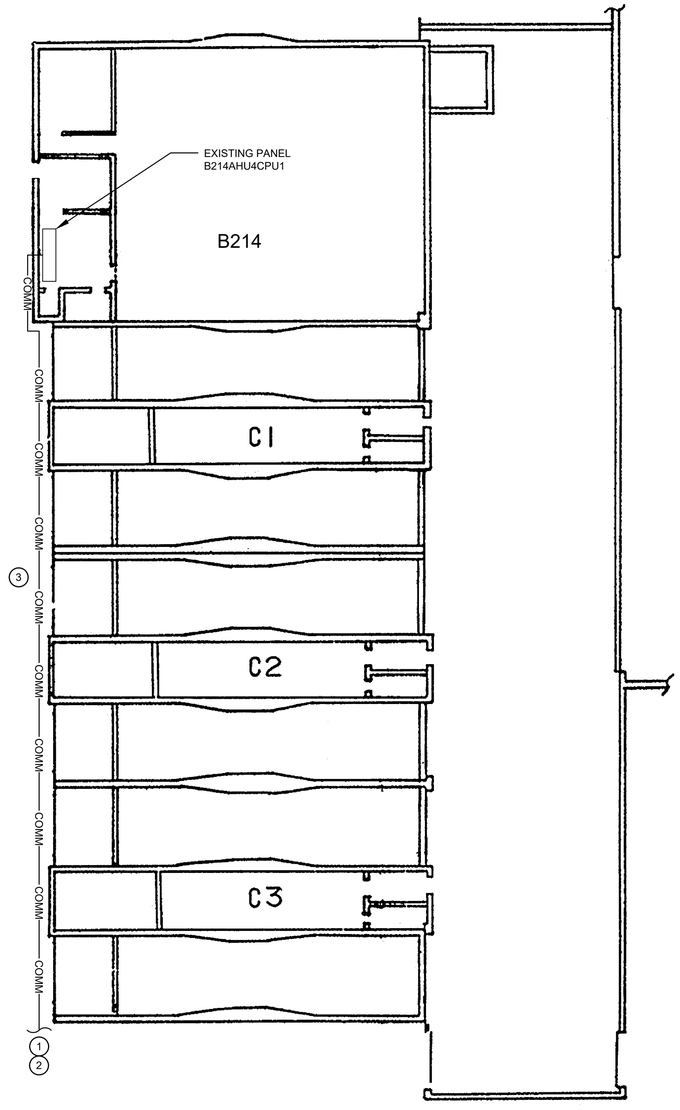

01
Y-201
BUILDING 214 SECOND FLOOR INTERIOR ROUTING PLAN IW-LS-3
SCALE: NTS

GENERAL NOTES:

1. CONTRACTOR TO VERIFY LOCATIONS OF EXISTING UTILITIES AND ALL SURVEY INFORMATION PRIOR TO CONSTRUCTION.
2. CONTRACTOR SHALL ADJUST MANHOLES AND VALVE BOXES WITHIN PROJECT LIMIT TO FINISH GRADE.
3. WALL THICKNESS TO BE FIELD VERIFIED BY CONTRACTOR.

KEY NOTES:

1. SEE CIVIL PLANS SHEET: WWYK240146 C-101 FOR ADDITIONAL INFORMATION AND FOR CONTINUATION OF LINE OUT OF BUILDING 214.
2. SEE STRUCTURAL PLANS SHEET: WWYK240146 S-001 FOR ADDITIONAL INFORMATION FOR WALL PENETRATION.
3. CONDUIT TO RUN ALONG EXTERIOR OF BUILDING NEXT TO EXISTING CONDUIT.

LEGEND:

——COMM—— PROPOSED COMM LINE

AFMC
AIR FORCE MATERIEL COMMAND
72 ABW CIVIL ENGINEER DIRECTORATE
TINKER AFB, OK

LICENSED PROFESSIONAL ENGINEER
STEPHEN HORRAS
35430
OKLAHOMA
11/05/25

PROJECT INFORMATION
WWYK240146
DESIGN & IMPLEMENT MONITORING & CONTROL SYSTEM FOR IWCS, B62516
TINKER AIR FORCE BASE, OKLAHOMA

REVISIONS

MARK	DATE	DESCRIPTION

MANAGEMENT INFORMATION
ISSUE DATE: 11/5/2025
DESIGN GROUP: HDR
DESIGNED BY:S. HORRAS
DRAWN BY:A. HECK
CHECKED BY:P. KAPADIA
DESIGN FILE LOCATION:

SHEET TITLE
INSTRUMENTATION
INTERIOR ROUTING PLAN
IW-LS-3

SHEET NUMBER
Y-201

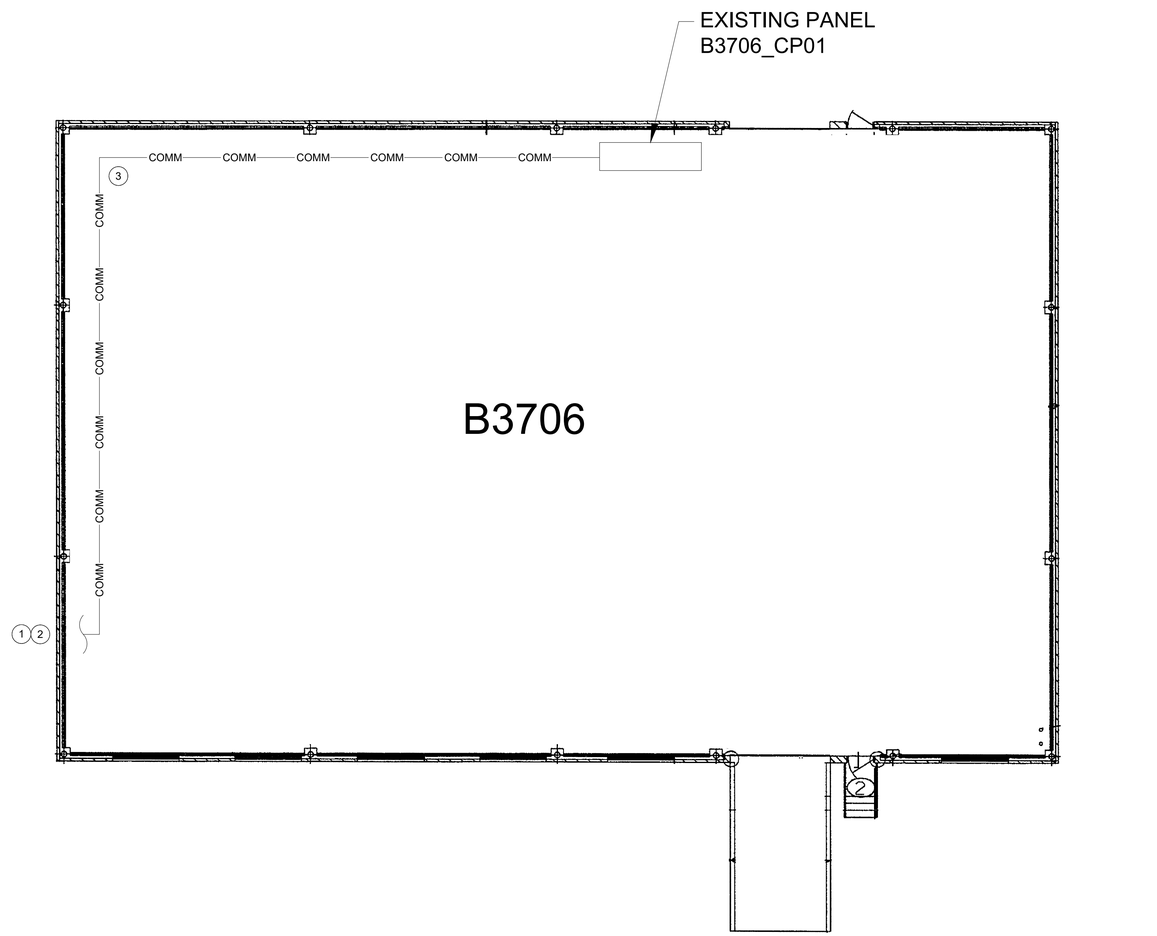

01
Y-202

BUILDING 3706 INTERIOR ROUTING PLAN IW-LS-10

SCALE: NTS

GENERAL NOTES:

1. CONTRACTOR TO VERIFY LOCATIONS OF EXISTING UTILITIES AND ALL SURVEY INFORMATION PRIOR TO CONSTRUCTION.
2. CONTRACTOR SHALL ADJUST MANHOLES AND VALVE BOXES WITHIN PROJECT LIMIT TO FINISH GRADE.
3. WALL THICKNESS TO BE FIELD VERIFIED BY CONTRACTOR.

KEY NOTES:

1. SEE CIVIL PLANS SHEET: WWYK240146 C-102 FOR ADDITIONAL INFORMATION AND FOR CONTINUATION OF LINE OUT OF BUILDING 3706.
2. SEE STRUCTURAL PLANS SHEET: WWYK240146 S-001 FOR ADDITIONAL INFORMATION FOR WALL PENETRATION.
3. CONDUIT TO RUN ALONG INTERIOR OF BUILDING NEXT TO EXISTING CONDUIT.

LEGEND:

COMM — PROPOSED COMM LINE

AFMC
AIR FORCE MATERIEL COMMAND
72 ABW CIVIL ENGINEER DIRECTORATE
TINKER AFB, OK

LICENSED PROFESSIONAL ENGINEER
STEPHEN HORRAS
35430
OKLAHOMA
11/05/25

PROJECT INFORMATION
WWYK240146
DESIGN & IMPLEMENT MONITORING & CONTROL SYSTEM FOR IWCS, B62516
TINKER AIR FORCE BASE, OKLAHOMA

REVISIONS

MARK	DATE	DESCRIPTION

MANAGEMENT INFORMATION

ISSUE DATE: 11/5/2025
DESIGN GROUP: HDR
DESIGNED BY:S. HORRAS
DRAWN BY:A. HECK
CHECKED BY:P. KAPADIA
DESIGN FILE LOCATION:

SHEET TITLE
INSTRUMENTATION
INTERIOR ROUTING PLAN
IW-LS-10

SHEET NUMBER
Y-202

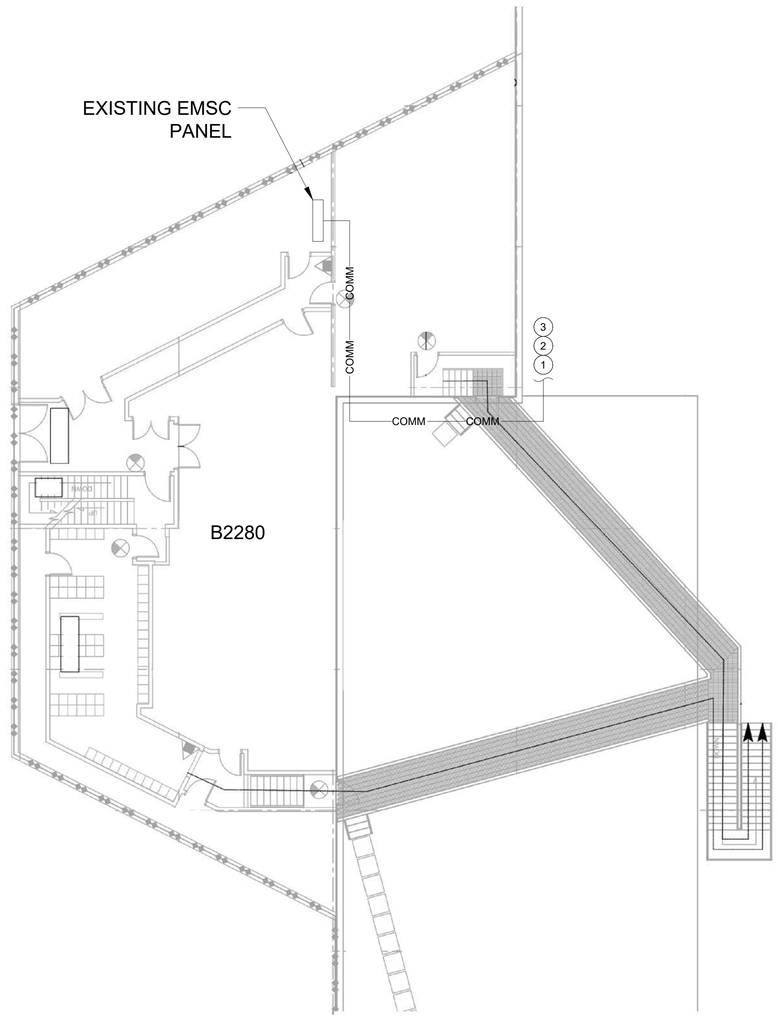

01 Y-203 BUILDING 2280 SECOND FLOOR INTERIOR ROUTING PLAN IW-LS-10

SCALE: NTS

GENERAL NOTES:

1. CONTRACTOR TO VERIFY LOCATIONS OF EXISTING UTILITIES AND ALL SURVEY INFORMATION PRIOR TO CONSTRUCTION.
2. CONTRACTOR SHALL ADJUST MANHOLES AND VALVE BOXES WITHIN PROJECT LIMIT TO FINISH GRADE.
3. ALL PENETRATIONS ARE TO BE SEALED WITH APPROPRIATE SEALANT OR FIRESTOPPING SPECIFIC TO ASSEMBLY BEING PENETRATED. ALL PENETRATIONS TO BE SEALED, TYPICAL.
4. WALL THICKNESS TO BE FIELD VERIFIED BY CONTRACTOR.

KEY NOTES:

1. SEE CIVIL PLANS SHEET: WWYK240146 C-103 FOR ADDITIONAL INFORMATION AND FOR CONTINUATION OF LINE OUT OF BUILDING 2280.
2. SEE STRUCTURAL PLANS SHEET: WWYK240146 S-001 NOTES: G10, AND EC1-EC4, FOR ADDITIONAL INFORMATION FOR WALL PENETRATION.
3. CONDUIT TO RUN ALONG EXTERIOR OF BUILDING NEXT TO EXISTING CONDUIT.

LEGEND:

COMM — PROPOSED COMM LINE

AFMC
AIR FORCE MATERIEL COMMAND
72 ABW CIVIL ENGINEER DIRECTORATE
TINKER AFB, OK

LICENSED PROFESSIONAL ENGINEER
STEPHEN HORRAS
35430
OKLAHOMA
11/05/25

PROJECT INFORMATION
WWYK240146
DESIGN & IMPLEMENT MONITORING & CONTROL SYSTEM FOR IWCS, B62516
TINKER AIR FORCE BASE, OKLAHOMA

REVISIONS

MARK	DATE	DESCRIPTION

MANAGEMENT INFORMATION
ISSUE DATE: 11/5/2025
DESIGN GROUP: HDR
DESIGNED BY:S. HORRAS
DRAWN BY:A. HECK
CHECKED BY:P. KAPADIA
DESIGN FILE LOCATION:

SHEET TITLE:
INSTRUMENTATION
INTERIOR ROUTING PLAN
IW-LS-2280

SHEET NUMBER
Y-203

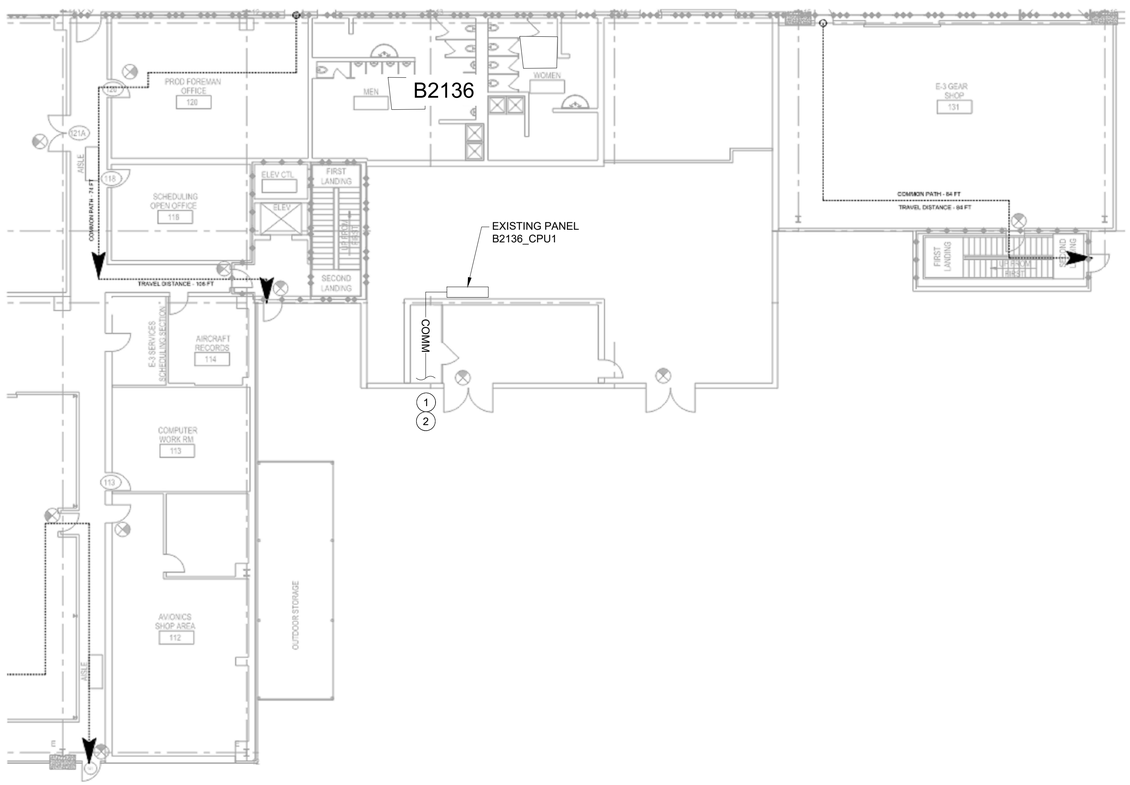

01
Y-204

BUILDING 2136 SECOND FLOOR INTERIOR ROUTING PLAN IW-LS-6N & IW-LS-6S

SCALE: NTS

N

GENERAL NOTES:

1. CONTRACTOR TO VERIFY LOCATIONS OF EXISTING UTILITIES AND ALL SURVEY INFORMATION PRIOR TO CONSTRUCTION.
2. CONTRACTOR SHALL ADJUST MANHOLES AND VALVE BOXES WITHIN PROJECT LIMIT TO FINISH GRADE.
3. ALL PENETRATIONS ARE TO BE SEALED WITH APPROPRIATE SEALANT OR FIRESTOPPING SPECIFIC TO ASSEMBLY BEING PENETRATED. ALL PENETRATIONS TO BE SEALED, TYPICAL.
4. WALL THICKNESS TO BE FIELD VERIFIED BY CONTRACTOR.

KEY NOTES:

1. SEE CIVIL PLANS SHEET: WWYK240146 C-104 FOR ADDITIONAL INFORMATION AND FOR CONTINUATION OF LINE OUT OF BUILDING 2136.
2. SEE STRUCTURAL PLANS SHEET: WWYK240146 S-001 NOTES: G10, AND EC1-EC4, FOR ADDITIONAL INFORMATION FOR WALL PENETRATION.

LEGEND:

——COMM—— PROPOSED COMM LINE

AFMC
AIR FORCE MATERIEL COMMAND
72 ABW CIVIL ENGINEER DIRECTORATE
TINKER AFB, OK

LICENSED PROFESSIONAL ENGINEER
STEPHEN HORRAS
35430
OKLAHOMA
11/05/25

PROJECT INFORMATION
WWYK240146
DESIGN & IMPLEMENT MONITORING & CONTROL SYSTEM FOR IWCS, B62516
TINKER AIR FORCE BASE, OKLAHOMA

REVISIONS

MARK	DATE	DESCRIPTION

MANAGEMENT INFORMATION
ISSUE DATE: 11/5/2025
DESIGN GROUP: HDR
DESIGNED BY:S. HORRAS
DRAWN BY:A. HECK
CHECKED BY:P. KAPADIA
DESIGN FILE LOCATION:

SHEET TITLE
INSTRUMENTATION
INTERIOR ROUTING PLAN
IW-LS-6

SHEET NUMBER
Y-204

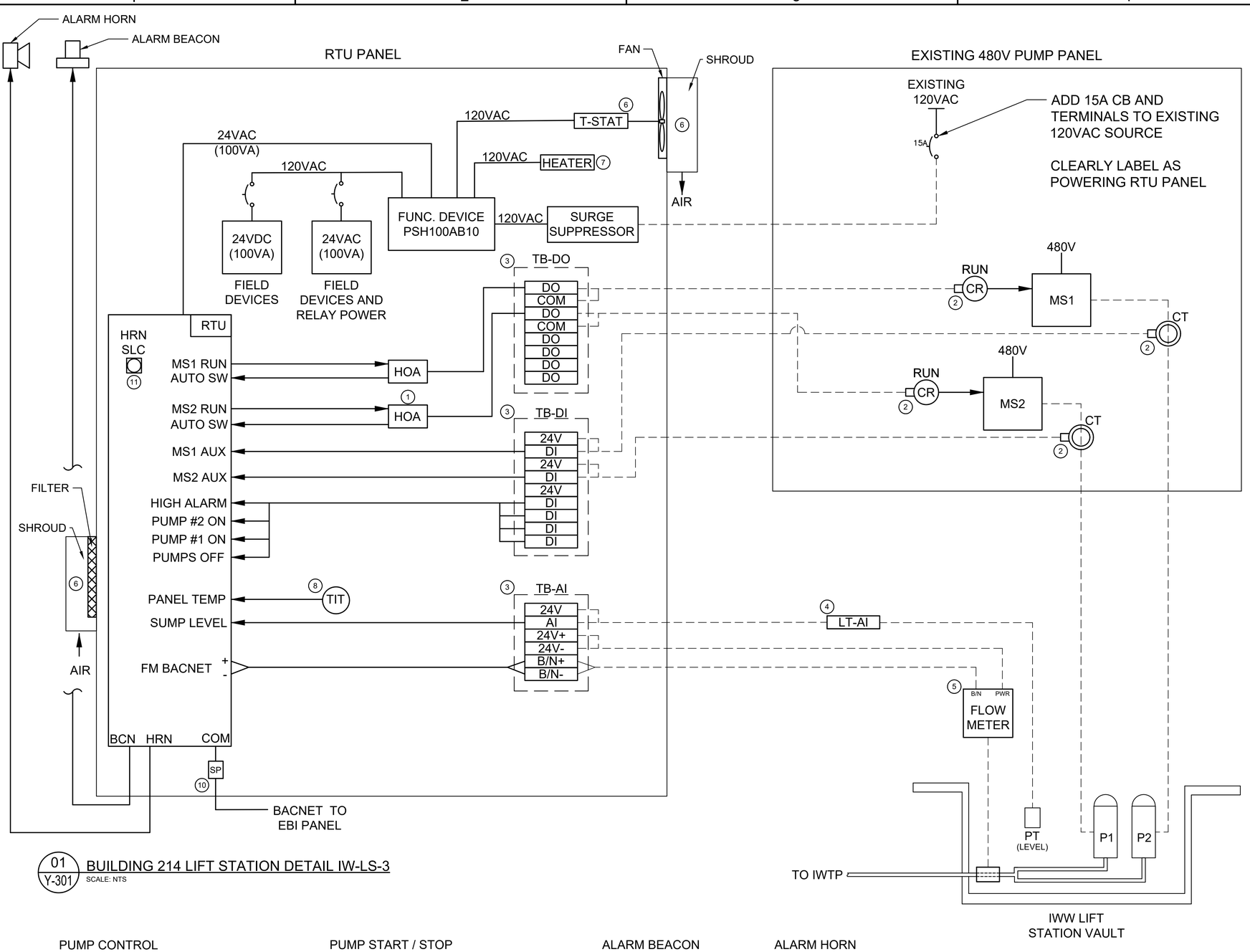

01 Y-301 BUILDING 214 LIFT STATION DETAIL IW-LS-3

SCALE: NTS

PUMP CONTROL

1. PUMP TO BE PROGRAMMED FOR LEAD / LAG CONTROL.
2. ROTATE LEAD WHEN BOTH PUMPS OFF.
3. ROTATE LAG TO LEAD IF LEAD PUMP FAILS.
4. ALARM IN SCADA: FAILED TO RUN, FAILED TO STOP, NOT IN AUTO
5. ACCUMULATE RUNTIME HOURS (RTH) AND DISPLAY ON SCADA.

PUMP START / STOP

1. MEASURE SUMP LEVEL VIA ANALOG LEVEL SENSOR.
2. PROGRAM ADJUSTABLE PUMP ON/OFF SETPOINTS (HIGH TO LOW)

HI HI:	HIGH SUMP ALARM
HI:	LAG PUMP ON
LO:	LEAD PUMP ON
LO LO:	ALL PUMPS OFF:

ALARM BEACON

1. ACTIVE WHEN ALARM ACTIVE.
2. ALARMS: HIGH HIGH SUMP LEVEL
   ANALOG SIGNAL LOSS
   PUMP FAULT (ALL)
   LOW LOW PANEL TEMP
   HIGH HIGH PANEL TEMP
   DOOR OPEN

ALARM HORN

1. ACTIVE WHEN ALARM ACTIVE.
2. HORN SILENCE SWITCH TO SILENCE HORN FOR 30 MINUTES.
3. ALARMS: HIGH HIGH SUMP LEVEL
   ANALOG SIGNAL LOSS
   PUMP FAULT (ALL)
   LOW LOW PANEL TEMP
   HIGH HIGH PANEL TEMP

02 Y-301 BUILDING 214 SEQUENCE OF OPERATIONS IW-LS-3

SCALE: NTS

GENERAL NOTES:

1. CONTRACTOR TO VERIFY LOCATIONS OF EXISTING UTILITIES AND ALL SURVEY INFORMATION PRIOR TO CONSTRUCTION.
2. CONTRACTOR SHALL ADJUST MANHOLES AND VALVE BOXES WITHIN PROJECT LIMIT TO FINISH GRADE.

KEY NOTES:

1. PLACE KEYED HOA SWITCHES ON FRONT OF RTU ENCLOSURE. COORDINATE WITH ITWP PERSONNEL FOR MANUFACTURER AND KEY CODE. PROVIDE CONTACT BLOCK TO MONITOR AUTO POSITION.
2. PLACE CONTROL RELAY AND CT SWITCH IN PUMP START PANEL.
3. DESIGN PANEL TO BRING ALL AVAILABLE RTU I/O TO FIELD TERMINAL STRIPS. ALL FIELD DEVICES TO CONNECT TO PANEL THROUGH FIELD TERMINAL STRIPS.
4. EXISTING HYDROSTATIC (PRESSURE) LEVEL SENSOR.
5. PROVIDE AND INSTALL ONICON F-4300 CLAMP ON FLOW METER AND TRANSMITTER. SEE SPECIFICATIONS SECTION 2.4 FOR FLOW METER SELECTION.
6. PROVIDE FAN AND VENT FOR AIR FLOW. PROVIDE THERMOSTAT FOR FAN CONTROL. PROVIDE SHROUDS FOR NEMA 3R.
7. PROVIDE PANEL 120VAC PANEL HEATER WITH INTEGRAL T-STAT.
8. PROVIDE SENSOR TO MONITOR PANEL INTERNAL TEMPERATURE.
9. PROVIDE DOOR SWITCH TO MONITOR DOOR OPEN.
10. PROVIDE SURGE PROTECTION FOR BACNET COMMUNICATION LINES BETWEEN RTU AND EBI PANEL.
11. PLACE HORN SILENCE SWITCH ON FRONT OF RTU PANEL.

LEGEND:

PROPOSED PANEL WIRING

PROPOSED FIELD WIRING

AFMC
AIR FORCE MATERIEL COMMAND
72 ABW CIVIL ENGINEER DIRECTORATE
TINKER AFB, OK

LICENSED PROFESSIONAL ENGINEER
STEPHEN HORRAS
35430
OKLAHOMA
11/05/25

PROJECT INFORMATION
WWYK240146
DESIGN & IMPLEMENT MONITORING & CONTROL SYSTEM FOR IWCS, B62516
TINKER AIR FORCE BASE, OKLAHOMA

REVISIONS

MARK	DATE	DESCRIPTION

MANAGEMENT INFORMATION

ISSUE DATE: 11/5/2025
DESIGN GROUP: HDR
DESIGNED BY: S. HORRAS
DRAWN BY: A. HECK
CHECKED BY: P. KAPADIA
DESIGN FILE LOCATION:

SHEET TITLE
INSTRUMENTATION
LIFT STATION DETAIL
IW-LS-3

SHEET NUMBER
Y-301

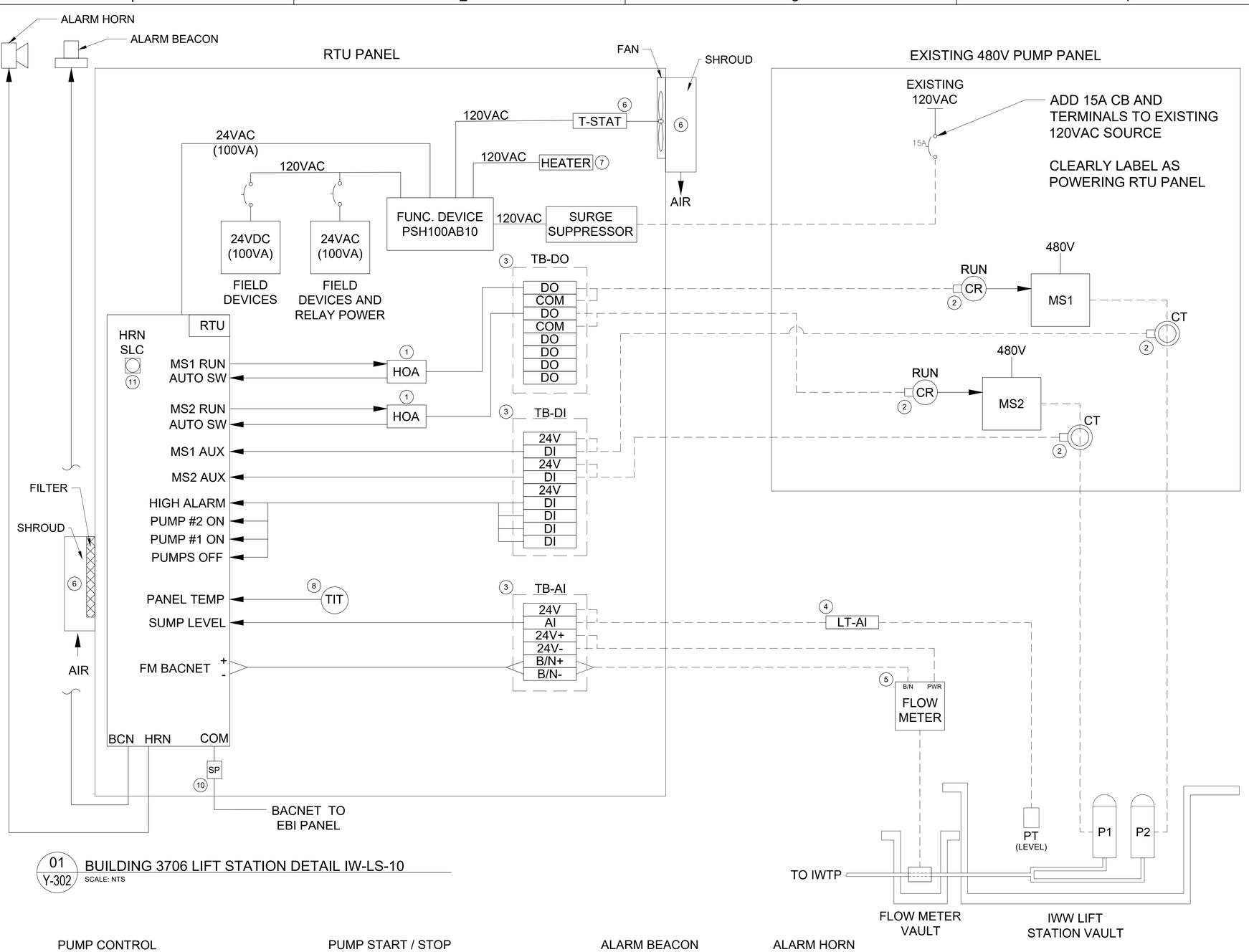

01 Y-302 BUILDING 3706 LIFT STATION DETAIL IW-LS-10

SCALE: NTS

PUMP CONTROL

1. PUMP TO BE PROGRAMMED FOR LEAD / LAG CONTROL.
2. ROTATE LEAD WHEN BOTH PUMPS OFF.
3. ROTATE LAG TO LEAD IF LEAD PUMP FAILS.
4. ALARM IN SCADA: FAILED TO RUN, FAILED TO STOP, NOT IN AUTO
5. ACCUMULATE RUNTIME HOURS (RTH) AND DISPLAY ON SCADA.

PUMP START / STOP

1. MEASURE SUMP LEVEL VIA ANALOG LEVEL SENSOR.
2. PROGRAM ADJUSTABLE PUMP ON/OFF SETPOINTS (HIGH TO LOW)

HI HI:	HIGH SUMP ALARM
HI:	LAG PUMP ON
LO:	LEAD PUMP ON
LO LO:	ALL PUMPS OFF:

ALARM BEACON

1. ACTIVE WHEN ALARM ACTIVE.
2. ALARMS: HIGH HIGH SUMP LEVEL
   ANALOG SIGNAL LOSS
   PUMP FAULT (ALL)
   LOW LOW PANEL TEMP
   HIGH HIGH PANEL TEMP
   DOOR OPEN

ALARM HORN

1. ACTIVE WHEN ALARM ACTIVE.
2. HORN SILENCE SWITCH TO SILENCE HORN FOR 30 MINUTES.
3. ALARMS: HIGH HIGH SUMP LEVEL
   ANALOG SIGNAL LOSS
   PUMP FAULT (ALL)
   LOW LOW PANEL TEMP
   HIGH HIGH PANEL TEMP

02 Y-302 BUILDING 3706 SEQUENCE OF OPERATIONS IW-LS-10

SCALE: NTS

GENERAL NOTES:

1. CONTRACTOR TO VERIFY LOCATIONS OF EXISTING UTILITIES AND ALL SURVEY INFORMATION PRIOR TO CONSTRUCTION.
2. CONTRACTOR SHALL ADJUST MANHOLES AND VALVE BOXES WITHIN PROJECT LIMIT TO FINISH GRADE.

KEY NOTES:

1. PLACE KEYED HOA SWITCHES ON FRONT OF RTU ENCLOSURE. COORDINATE WITH ITWP PERSONNEL FOR MANUFACTURER AND KEY CODE. PROVIDE CONTACT BLOCK TO MONITOR AUTO POSITION.
2. PLACE CONTROL RELAY AND CT SWITCH IN PUMP START PANEL.
3. DESIGN PANEL TO BRING ALL AVAILABLE RTU I/O TO FIELD TERMINAL STRIPS. ALL FIELD DEVICES TO CONNECT TO PANEL THROUGH FIELD TERMINAL STRIPS.
4. EXISTING HYDROSTATIC (PRESSURE) LEVEL SENSOR.
5. PROVIDE AND INSTALL ONICON F-4300 CLAMP ON FLOW METER AND TRANSMITTER. SEE SPECIFICATIONS SECTION 2.4 FOR FLOW METER SELECTION.
6. PROVIDE FAN AND VENT FOR AIR FLOW. PROVIDE THERMOSTAT FOR FAN CONTROL. PROVIDE SHROUDS FOR NEMA 3R.
7. PROVIDE PANEL 120VAC PANEL HEATER WITH INTEGRAL T-STAT.
8. PROVIDE SENSOR TO MONITOR PANEL INTERNAL TEMPERATURE.
9. PROVIDE DOOR SWITCH TO MONITOR DOOR OPEN.
10. PROVIDE SURGE PROTECTION FOR BACNET COMMUNICATION LINES BETWEEN RTU AND EBI PANEL.
11. PLACE HORN SILENCE SWITCH ON FRONT OF RTU PANEL.

LEGEND:

PROPOSED PANEL WIRING

PROPOSED FIELD WIRING

AFMC
AIR FORCE MATERIEL COMMAND
72 ABW CIVIL ENGINEER DIRECTORATE
TINKER AFB, OK

LICENSED PROFESSIONAL ENGINEER
STEPHEN HORRAS
35430
OKLAHOMA
11/05/25

PROJECT INFORMATION
WWYK240146
DESIGN & IMPLEMENT MONITORING & CONTROL SYSTEM FOR IWCS, B62516
TINKER AIR FORCE BASE, OKLAHOMA

REVISIONS

MARK	DATE	DESCRIPTION

MANAGEMENT INFORMATION

ISSUE DATE:	11/5/2025
DESIGN GROUP:	HDR
DESIGNED BY:	S. HORRAS
DRAWN BY:	A. HECK
CHECKED BY:	P. KAPADIA
DESIGN FILE LOCATION:	

SHEET TITLE
INSTRUMENTATION
LIFT STATION DETAIL
IW-LS-10

SHEET NUMBER
Y-302

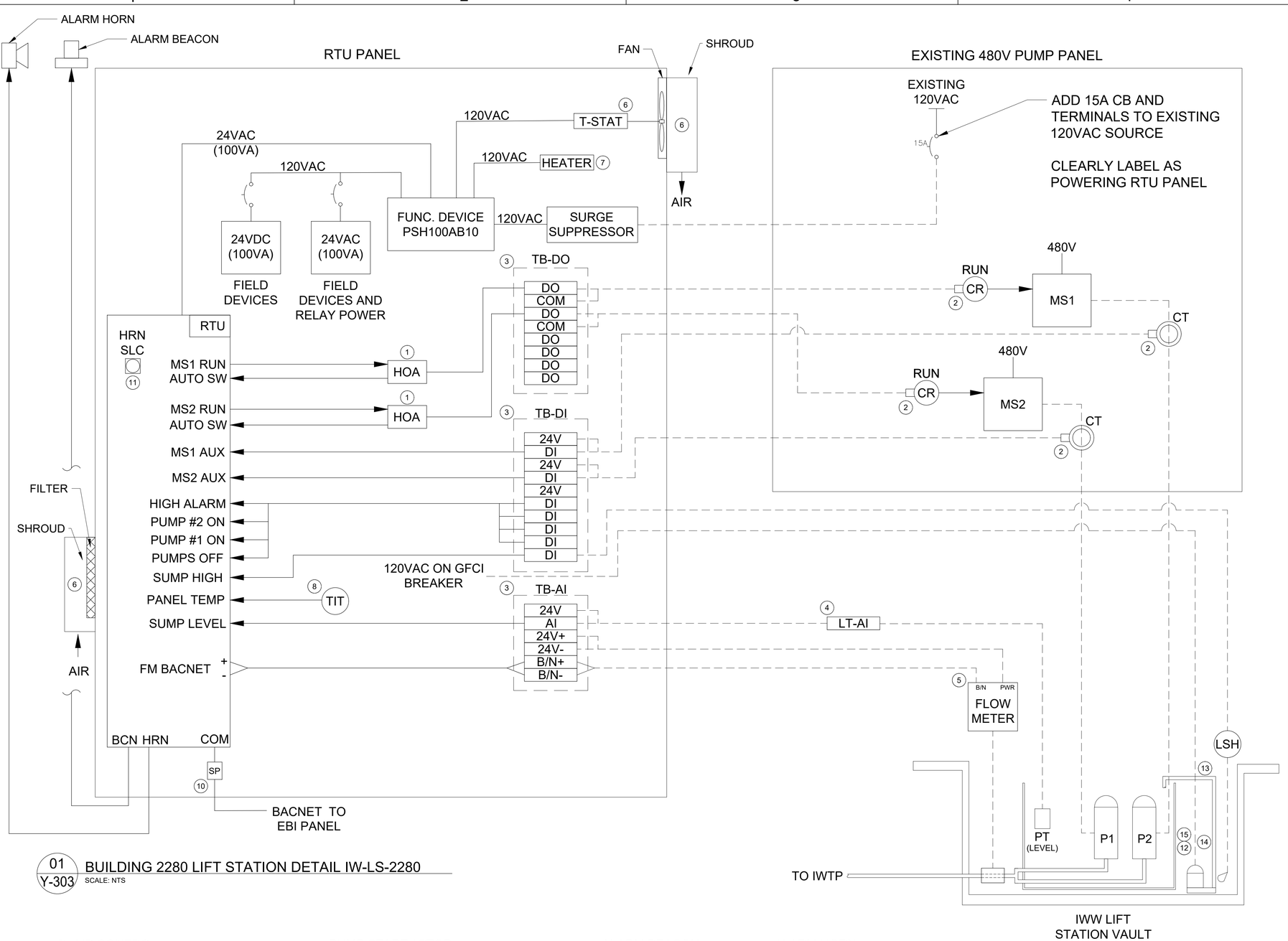

01 Y-303 BUILDING 2280 LIFT STATION DETAIL IW-LS-2280

SCALE: NTS

PUMP CONTROL

1. PUMP TO BE PROGRAMMED FOR LEAD / LAG CONTROL.
2. ROTATE LEAD WHEN BOTH PUMPS OFF.
3. ROTATE LAG TO LEAD IF LEAD PUMP FAILS.
4. ALARM IN SCADA: FAILED TO RUN, FAILED TO STOP, NOT IN AUTO
5. ACCUMULATE RUNTIME HOURS (RTH) AND DISPLAY ON SCADA.

PUMP START / STOP

1. MEASURE SUMP LEVEL VIA ANALOG LEVEL SENSOR.
2. PROGRAM ADJUSTABLE PUMP ON/OFF SETPOINTS (HIGH TO LOW)

HI HI:	HIGH SUMP ALARM
HI:	LAG PUMP ON
LO:	LEAD PUMP ON
LO LO:	ALL PUMPS OFF:

ALARM BEACON

1. ACTIVE WHEN ALARM ACTIVE.
2. ALARMS: HIGH HIGH SUMP LEVEL
   ANALOG SIGNAL LOSS
   PUMP FAULT (ALL)
   LOW LOW PANEL TEMP
   HIGH HIGH PANEL TEMP
   DOOR OPEN

ALARM HORN

1. ACTIVE WHEN ALARM ACTIVE.
2. HORN SILENCE SWITCH TO SILENCE HORN FOR 30 MINUTES.
3. ALARMS: HIGH HIGH SUMP LEVEL
   ANALOG SIGNAL LOSS
   PUMP FAULT (ALL)
   LOW LOW PANEL TEMP
   HIGH HIGH PANEL TEMP

02 Y-303 BUILDING 2280 SEQUENCE OF OPERATIONS IW-LS-2280

SCALE: NTS

GENERAL NOTES:

1. CONTRACTOR TO VERIFY LOCATIONS OF EXISTING UTILITIES AND ALL SURVEY INFORMATION PRIOR TO CONSTRUCTION.
2. CONTRACTOR SHALL ADJUST MANHOLES AND VALVE BOXES WITHIN PROJECT LIMIT TO FINISH GRADE.

KEY NOTES:

1. PLACE KEYED HOA SWITCHES ON FRONT OF RTU ENCLOSURE. COORDINATE WITH ITWP PERSONNEL FOR MANUFACTURER AND KEY CODE. PROVIDE CONTACT BLOCK TO MONITOR AUTO POSITION.
2. PLACE CONTROL RELAY AND CT SWITCH IN PUMP START PANEL.
3. DESIGN PANEL TO BRING ALL AVAILABLE RTU I/O TO FIELD TERMINAL STRIPS. ALL FIELD DEVICES TO CONNECT TO PANEL THROUGH FIELD TERMINAL STRIPS.
4. EXISTING HYDROSTATIC (PRESSURE) LEVEL SENSOR.
5. PROVIDE AND INSTALL ONICON F-4300 CLAMP ON FLOW METER AND TRANSMITTER. SEE SPECIFICATIONS SECTION 2.4 FOR FLOW METER SELECTION.
6. PROVIDE FAN AND VENT FOR AIR FLOW. PROVIDE THERMOSTAT FOR FAN CONTROL. PROVIDE SHROUDS FOR NEMA 3R.
7. PROVIDE PANEL 120VAC PANEL HEATER WITH INTEGRAL T-STAT.
8. PROVIDE SENSOR TO MONITOR PANEL INTERNAL TEMPERATURE.
9. PROVIDE DOOR SWITCH TO MONITOR DOOR OPEN.
10. PROVIDE SURGE PROTECTION FOR BACNET COMMUNICATION LINES BETWEEN RTU AND EBI PANEL.
11. PLACE HORN SILENCE SWITCH ON FRONT OF RTU PANEL.
12. PROVIDE AND INSTALL SUMP PUMP RATED AT MINIMUM 2.1 GPM AND 15 FEET OF HEAD TO KEEP STORM WATER FROM FILLING PIT AND DISCHARGE INTO EXISTING INTERIOR METAL CONTAINMENT BASIN. PROVIDE A 120 VAC GFCI CIRCUIT IN RTU PANEL FOR SUMP PUMP POWER.
13. PROVIDE PIPE SUPPORT FOR NEW SUMP PUMP BASED ON SITE SPECIFIC NEEDS. INSTALL TO MINIMIZE INTERFERENCE WITH OPERATION OF WET WELL.
14. PROVIDE HEAT TRACING TO NEW SUMP AND ASSOCIATED PIPING.
15. PROVIDE A SUMP PUMP WITH AN INTEGRAL FLOAT SWITCH, TO EMPTY OUT WATER IN THE OUTER TANK TO THE INNER TANK WHICH HOLDS THE IWW. THE SUMP PUMP TO BE SUPPLIED WITH A MOTOR STARTER.

LEGEND:

PROPOSED PANEL WIRING

PROPOSED FIELD WIRING

AFMC
AIR FORCE MATERIEL COMMAND
72 ABW CIVIL ENGINEER DIRECTORATE
TINKER AFB, OK

LICENSED PROFESSIONAL ENGINEER
STEPHEN HORRAS
35430
OKLAHOMA
11/05/25

PROJECT INFORMATION
WWYK240146
DESIGN & IMPLEMENT MONITORING & CONTROL SYSTEM FOR IWCS, B62516
TINKER AIR FORCE BASE, OKLAHOMA

REVISIONS

MARK	DATE	DESCRIPTION

MANAGEMENT INFORMATION

ISSUE DATE: 11/5/2025
DESIGN GROUP: HDR
DESIGNED BY:S. HORRAS
DRAWN BY:A. HECK
CHECKED BY:P. KAPADIA
DESIGN FILE LOCATION:

SHEET TITLE
INSTRUMENTATION
LIFT STATION DETAIL
IW-LS-2280

SHEET NUMBER
Y-303

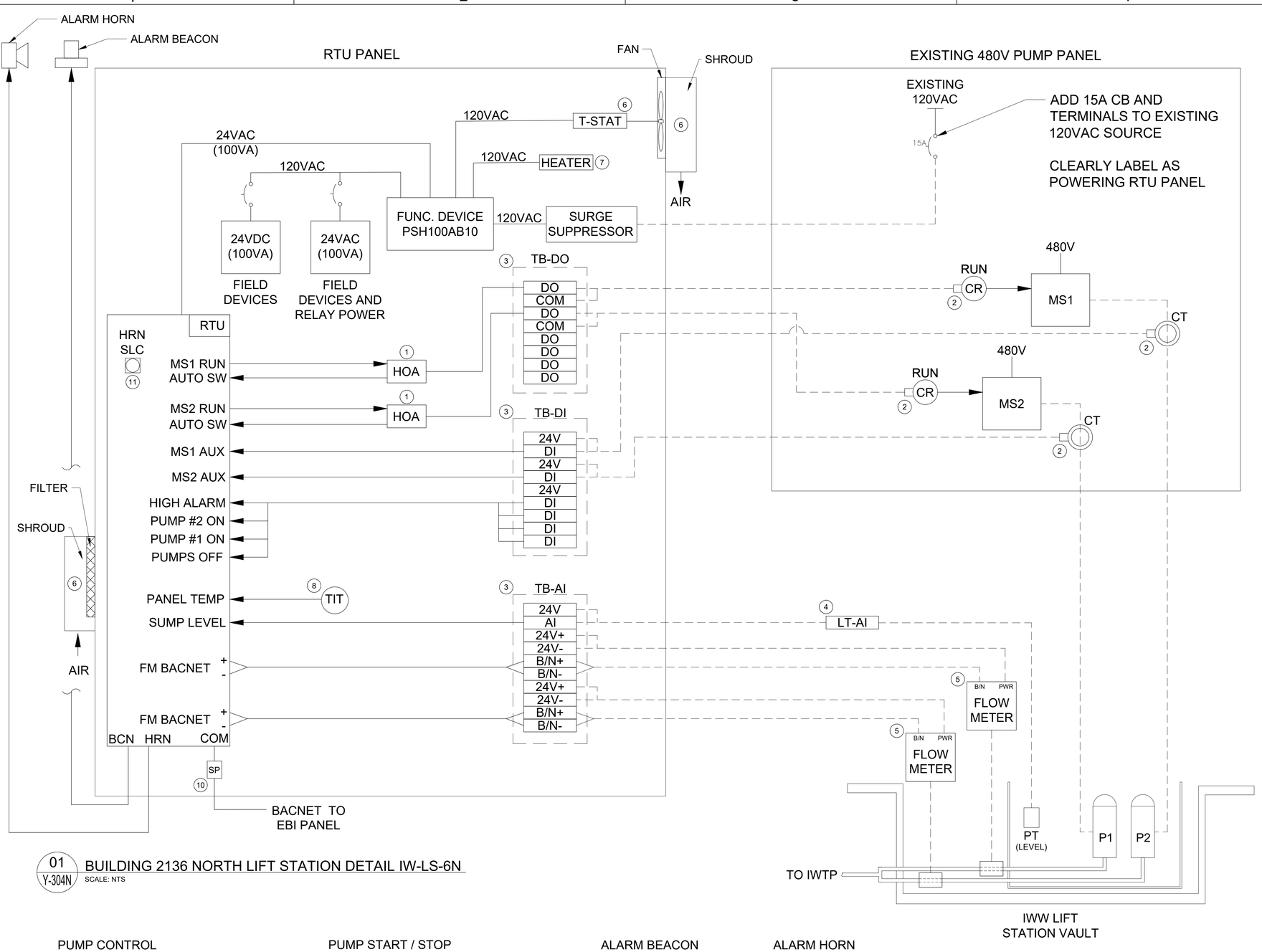

01 Y-304N BUILDING 2136 NORTH LIFT STATION DETAIL IW-LS-6N

SCALE: NTS

PUMP CONTROL

1. PUMP TO BE PROGRAMMED FOR LEAD / LAG CONTROL.
2. ROTATE LEAD WHEN BOTH PUMPS OFF.
3. ROTATE LAG TO LEAD IF LEAD PUMP FAILS.
4. ALARM IN SCADA: FAILED TO RUN, FAILED TO STOP, NOT IN AUTO
5. ACCUMULATE RUNTIME HOURS (RTH) AND DISPLAY ON SCADA.

PUMP START / STOP

1. MEASURE SUMP LEVEL VIA ANALOG LEVEL SENSOR.
2. PROGRAM ADJUSTABLE PUMP ON/OFF SETPOINTS (HIGH TO LOW)

HI HI:	HIGH SUMP ALARM
HI:	LAG PUMP ON
LO:	LEAD PUMP ON
LO LO:	ALL PUMPS OFF:

ALARM BEACON

1. ACTIVE WHEN ALARM ACTIVE.
2. ALARMS: HIGH HIGH SUMP LEVEL
   ANALOG SIGNAL LOSS
   PUMP FAULT (ALL)
   LOW LOW PANEL TEMP
   HIGH HIGH PANEL TEMP
   DOOR OPEN

ALARM HORN

1. ACTIVE WHEN ALARM ACTIVE.
2. HORN SILENCE SWITCH TO SILENCE HORN FOR 30 MINUTES.
3. ALARMS: HIGH HIGH SUMP LEVEL
   ANALOG SIGNAL LOSS
   PUMP FAULT (ALL)
   LOW LOW PANEL TEMP
   HIGH HIGH PANEL TEMP

02 Y-304N BUILDING 2136 SEQUENCE OF OPERATIONS IW-LS-6N

SCALE: NTS

GENERAL NOTES:

1. CONTRACTOR TO VERIFY LOCATIONS OF EXISTING UTILITIES AND ALL SURVEY INFORMATION PRIOR TO CONSTRUCTION.
2. CONTRACTOR SHALL ADJUST MANHOLES AND VALVE BOXES WITHIN PROJECT LIMIT TO FINISH GRADE.

KEY NOTES:

1. PLACE KEYED HOA SWITCHES ON FRONT OF RTU ENCLOSURE. COORDINATE WITH ITWP PERSONNEL FOR MANUFACTURER AND KEY CODE. PROVIDE CONTACT BLOCK TO MONITOR AUTO POSITION.
2. PLACE CONTROL RELAY AND CT SWITCH IN PUMP START PANEL.
3. DESIGN PANEL TO BRING ALL AVAILABLE RTU I/O TO FIELD TERMINAL STRIPS. ALL FIELD DEVICES TO CONNECT TO PANEL THROUGH FIELD TERMINAL STRIPS.
4. EXISTING HYDROSTATIC (PRESSURE) LEVEL SENSOR.
5. PROVIDE AND INSTALL ONICON F-4300 CLAMP ON FLOW METER AND TRANSMITTER. SEE SPECIFICATIONS SECTION 2.4 FOR FLOW METER SELECTION.
6. PROVIDE FAN AND VENT FOR AIR FLOW. PROVIDE THERMOSTAT FOR FAN CONTROL. PROVIDE SHROUDS FOR NEMA 3R.
7. PROVIDE PANEL 120VAC PANEL HEATER WITH INTEGRAL T-STAT.
8. PROVIDE SENSOR TO MONITOR PANEL INTERNAL TEMPERATURE.
9. PROVIDE DOOR SWITCH TO MONITOR DOOR OPEN.
10. PROVIDE SURGE PROTECTION FOR BACNET COMMUNICATION LINES BETWEEN RTU AND EBI PANEL.
11. PLACE HORN SILENCE SWITCH ON FRONT OF RTU PANEL.

LEGEND:

PROPOSED PANEL WIRING

PROPOSED FIELD WIRING

AFMC
AIR FORCE MATERIEL COMMAND
72 ABW CIVIL ENGINEER DIRECTORATE
TINKER AFB, OK

LICENSED PROFESSIONAL ENGINEER
STEPHEN HORRAS
35430
OKLAHOMA
11/05/25

PROJECT INFORMATION
WWYK240146
DESIGN & IMPLEMENT MONITORING & CONTROL SYSTEM FOR IWCS, B62516
TINKER AIR FORCE BASE, OKLAHOMA

REVISIONS

MARK	DATE	DESCRIPTION

MANAGEMENT INFORMATION

ISSUE DATE: 11/5/2025
DESIGN GROUP: HDR
DESIGNED BY:S. HORRAS
DRAWN BY:A. HECK
CHECKED BY:P. KAPADIA
DESIGN FILE LOCATION:

SHEET TITLE
INSTRUMENTATION NORTH LIFT STATION DETAIL IW-LS-6N

SHEET NUMBER
Y-304N

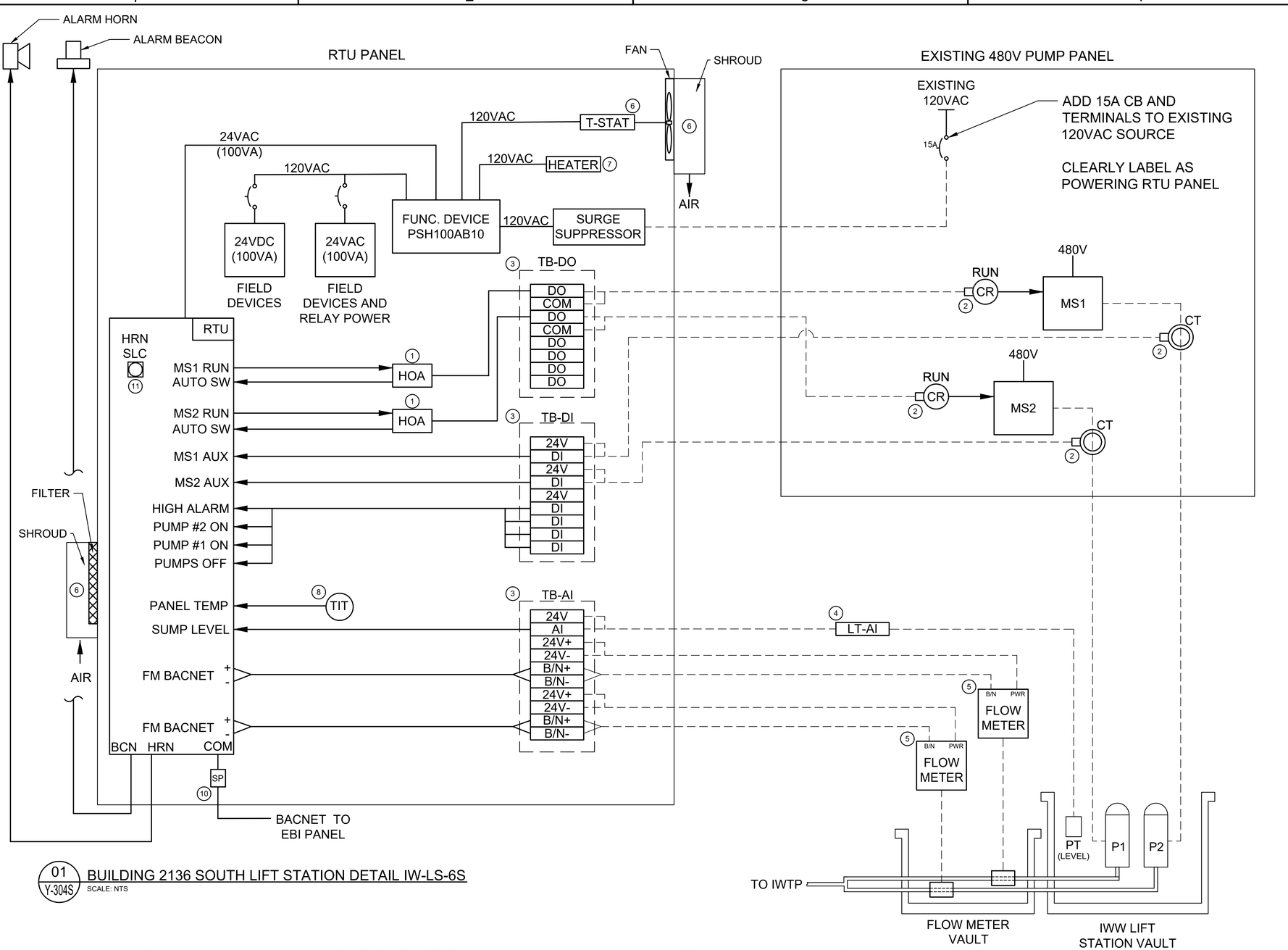

01 Y-304S BUILDING 2136 SOUTH LIFT STATION DETAIL IW-LS-6S

SCALE: NTS

PUMP CONTROL

1. PUMP TO BE PROGRAMMED FOR LEAD / LAG CONTROL.
2. ROTATE LEAD WHEN BOTH PUMPS OFF.
3. ROTATE LAG TO LEAD IF LEAD PUMP FAILS.
4. ALARM IN SCADA: FAILED TO RUN, FAILED TO STOP, NOT IN AUTO
5. ACCUMULATE RUNTIME HOURS (RTH) AND DISPLAY ON SCADA.

PUMP START / STOP

1. MEASURE SUMP LEVEL VIA ANALOG LEVEL SENSOR.
2. PROGRAM ADJUSTABLE PUMP ON/OFF SETPOINTS (HIGH TO LOW)

HI HI:	HIGH SUMP ALARM
HI:	LAG PUMP ON
LO:	LEAD PUMP ON
LO LO:	ALL PUMPS OFF:

ALARM BEACON

1. ACTIVE WHEN ALARM ACTIVE.
2. ALARMS: HIGH HIGH SUMP LEVEL
   ANALOG SIGNAL LOSS
   PUMP FAULT (ALL)
   LOW LOW PANEL TEMP
   HIGH HIGH PANEL TEMP
   DOOR OPEN

ALARM HORN

1. ACTIVE WHEN ALARM ACTIVE.
2. HORN SILENCE SWITCH TO SILENCE HORN FOR 30 MINUTES.
3. ALARMS: HIGH HIGH SUMP LEVEL
   ANALOG SIGNAL LOSS
   PUMP FAULT (ALL)
   LOW LOW PANEL TEMP
   HIGH HIGH PANEL TEMP

02 Y-304S BUILDING 2136 SEQUENCE OF OPERATIONS IW-LS-6S

SCALE: NTS

GENERAL NOTES:

1. CONTRACTOR TO VERIFY LOCATIONS OF EXISTING UTILITIES AND ALL SURVEY INFORMATION PRIOR TO CONSTRUCTION.
2. CONTRACTOR SHALL ADJUST MANHOLES AND VALVE BOXES WITHIN PROJECT LIMIT TO FINISH GRADE.

KEY NOTES:

1. PLACE KEYED HOA SWITCHES ON FRONT OF RTU ENCLOSURE. COORDINATE WITH ITWP PERSONNEL FOR MANUFACTURER AND KEY CODE. PROVIDE CONTACT BLOCK TO MONITOR AUTO POSITION.
2. PLACE CONTROL RELAY AND CT SWITCH IN PUMP START PANEL.
3. DESIGN PANEL TO BRING ALL AVAILABLE RTU I/O TO FIELD TERMINAL STRIPS. ALL FIELD DEVICES TO CONNECT TO PANEL THROUGH FIELD TERMINAL STRIPS.
4. EXISTING HYDROSTATIC (PRESSURE) LEVEL SENSOR.
5. PROVIDE AND INSTALL ONICON F-4300 CLAMP ON FLOW METER AND TRANSMITTER. SEE SPECIFICATIONS SECTION 2.4 FOR FLOW METER SELECTION.
6. PROVIDE FAN AND VENT FOR AIR FLOW. PROVIDE THERMOSTAT FOR FAN CONTROL. PROVIDE SHROUDS FOR NEMA 3R.
7. PROVIDE PANEL 120VAC PANEL HEATER WITH INTEGRAL T-STAT.
8. PROVIDE SENSOR TO MONITOR PANEL INTERNAL TEMPERATURE.
9. PROVIDE DOOR SWITCH TO MONITOR DOOR OPEN.
10. PROVIDE SURGE PROTECTION FOR BACNET COMMUNICATION LINES BETWEEN RTU AND EBI PANEL.
11. PLACE HORN SILENCE SWITCH ON FRONT OF RTU PANEL.

LEGEND:

PROPOSED PANEL WIRING

PROPOSED FIELD WIRING

AIR FORCE MATERIEL COMMAND
72 ABW CIVIL ENGINEER DIRECTORATE
TINKER AFB, OK

LICENSED PROFESSIONAL ENGINEER
STEPHEN HORRAS
35430
OKLAHOMA
11/05/25

PROJECT INFORMATION
WWYK240146
DESIGN & IMPLEMENT MONITORING & CONTROL SYSTEM FOR IWCS, B62516
TINKER AIR FORCE BASE, OKLAHOMA

REVISIONS

MARK	DATE	DESCRIPTION

MANAGEMENT INFORMATION

ISSUE DATE: 11/5/2025
DESIGN GROUP: HDR
DESIGNED BY:S. HORRAS
DRAWN BY:A. HECK
CHECKED BY:P. KAPADIA
DESIGN FILE LOCATION:

SHEET TITLE
INSTRUMENTATION SOUTH LIFT STATION DETAIL IW-LS-6S

SHEET NUMBER
Y-304S

01
E-100
OVERALL ELECTRICAL SITE PLAN
SCALE: 1" = 500'

0 500' 1000'

GENERAL NOTES:

1. THESE DRAWINGS SHALL BE READ IN CONJUNCTION WITH THE SPECIFICATIONS AND WITH SUCH OTHER WRITTEN INSTRUCTIONS AS MAY BE ISSUED DURING THE COURSE OF THE CONTRACT.
2. ALL CONSTRUCTION WORK SHALL BE UNDERTAKEN IN ACCORDANCE WITH ALL FEDERAL AND LOCAL LAWS, CURRENT STANDARDS REGULATIONS AND CODES.
3. VERIFY AND CHECK ALL DIMENSIONS AND DETAILS SHOWN ON THE DRAWINGS PRIOR TO THE START OF CONSTRUCTION. ANY DISCREPANCIES SHALL BE IMMEDIATELY BROUGHT TO THE ATTENTION OF THE CONTRACTING OFFICER FOR CLARIFICATION.
4. IF ANY DISCREPANCY OCCURS ON THE DRAWINGS OR BETWEEN DRAWINGS AND THE SPECIFICATION, THE CONTRACTOR SHALL DURING THE BID PERIOD ASSUME THE LARGER/GREATER SCOPE. ANY DISCREPANCY, INCLUDING THE NEED TO PROVIDE NEW POWER IF UPGRADING FROM 120V TO 480V FOR RTU PANELS, SHALL BE REFERRED TO THE CONTRACTING OFFICER BEFORE PROCEEDING WITH THE WORK.
5. THE SCOPE OF WORK INCLUDES BUT IS NOT LIMITED TO THE SUPPLY, DELIVERY, INSTALLATION, TESTING AND COMMISSIONING OF ALL MATERIALS, LABOR AND EQUIPMENT FOR THE COMPLETE ELECTRICAL SERVICES INSTALLATION AND ASSOCIATED CONSTRUCTION WORK AS SHOWN ON THE DRAWINGS AND SPECIFICATION. REFER TO INSTRUMENTATION DRAWINGS FOR ADDITIONAL INFORMATION.
6. COORDINATE AT ALL TIMES WITH THE CONTRACTING OFFICER.
7. CONTRACTOR SHALL BE RESPONSIBLE TO RESTORE ELECTRICAL SERVICE TO ALL EQUIPMENT, DEVICES AND CIRCUITS TO ORIGINAL OPERATION, WHICH ARE TO REMAIN IF SUCH ITEMS ARE AFFECTED BY CONSTRUCTION.
8. PROVIDE ALL MATERIALS, LABOR, AND EQUIPMENT FOR COMPLETE AND OPERABLE ELECTRICAL SYSTEMS AS INDICATED ON THE DRAWINGS, AS SPECIFIED, AND AS REQUIRED BY CODE.
9. CONTRACTOR SHALL BE RESPONSIBLE TO RESTORE ELECTRICAL SERVICE TO ALL EQUIPMENT, DEVICES AND CIRCUITS TO ORIGINAL OPERATION, WHICH ARE TO REMAIN IF SUCH ITEMS ARE AFFECTED BY CONSTRUCTION.
10. LOCATIONS ARE BASED ON AVAILABLE EXISTING AS-BUILT DRAWINGS AND LIMITED ACCESS FOR FIELD OBSERVATIONS. THE CONTRACTOR SHALL VERIFY THE EXACT LOCATION AND QUANTITIES OF EXISTING ELECTRICAL EQUIPMENT, DEVICES AND COMPONENTS AFFECTED BY THE PROJECT WORK INCLUDING BUT NOT LIMITED TO ELECTRICAL PANELBOARDS, DISCONNECTS, CONDUCTORS, CABLE CONDUITS ETC, THAT ARE AFFECTED BY THIS RENOVATION WORK.
11. INTERCEPT 120VAC TO EXISTING RTU PANEL AND ROUTE TO NEW RTU PANEL. PROVIDE DISCONNECT MEANS IN NEW RTU PANEL AS PER UL508A REQUIREMENTS. REFER TO INSTRUMENTATION DRAWINGS FOR ADDITIONAL INFORMATION.
12. NO CHANGES TO EXISTING 480VAC IS ANTICIPATED.

KEYED NOTES

(1) CONNECT TO NEAREST PANEL. PROVIDE 2#12, 1#12G FOR 120VAC CONNECTION TO LOCAL RTU PANEL. REFER TO I&C DRAWINGS FOR ADDITIONAL INFORMATION INCLUDING EXACT LOCATION OF SUMP PUMP.

AIR FORCE MATERIEL COMMAND
72 ABW CIVIL ENGINEER DIRECTORATE
TINKER AFB, OK

LICENSED PROFESSIONAL ENGINEER
STEPHEN HORRAS
35430
OKLAHOMA
11/05/25

PROJECT INFORMATION
WWYK240146
DESIGN & IMPLEMENT MONITORING & CONTROL SYSTEM FOR IWCS, B62516
TINKER AIR FORCE BASE, OKLAHOMA

REVISIONS

MARK	DATE	DESCRIPTION

MANAGEMENT INFORMATION
ISSUE DATE: 05 NOVEMBER 2025
DESIGN GROUP: HDR
DESIGNED BY:K. LE
DRAWN BY:E. STURDIVANT
CHECKED BY:G. JAGLOWSKI
DESIGN FILE LOCATION:

SHEET TITLE
ELECTRICAL OVERALL SITE PLAN

SHEET NUMBER
E-100