MECHANICAL ABBREVIATIONS

A/C or AC	AIR CONDITIONING	KW	KILOWATT
AFF	ABOVE FINISHED FLOOR	KWH	KILOWATT HOUR
AHU	AIR HANDLING UNIT		
ASHRAE	AMERICAN SOCIETY OF HEATING, REFRIGERATION, AND AIR CONDITIONING ENGINEERS	LAT	LEAVING AIR TEMPERATURE
		LAV	LAVATORY
BTU	BRITISH THERMAL UNITS	LWT	LEAVING WATER TEMPERATURE
BTUH	BTUS PER HOUR		
		MAX	MAXIMUM
CA	COMBUSTION AIR	MCA	MINIMUM CIRCUIT AMPS
CC	COOLING COIL	MOCP	MAXIMUM OVERCURRENT PROTECTION
CFM	AIR FLOW RATE (CUBIC FEET PER MINUTE)	MIN	MINIMUM
CHWR	CHILLED WATER RETURN		
CHWS	CHILLED WATER SUPPLY	NC	NOISE CRITERIA
CLG	CEILING	NFPA	NATIONAL FIRE PROTECTION ASSOCIATION
CW	COLD WATER	NTS	NOT TO SCALE
DEG or °	DEGREE	OSA	OUTSIDE AIR
DIA or Ø	DIAMETER		
DB	DRY BULB	PD	PRESSURE DROP
		PH or Ø	PHASE
EA	EXHAUST AIR	PRV	PRESSURE REDUCING VALVE
EAT	ENTERING AIR TEMPERATURE		
EER	ENERGY EFFICIENCY RATIO	RA	RETURN AIR
ESP	EXTERNAL STATIC PRESSURE	RPM	REVOLUTIONS PER MINUTE
EWT	ENTERING WATER TEMPERATURE	RTU	ROOFTOP UNIT
FCO	FLOOR CLEANOUT	SA	SUPPLY AIR
FD	FIRE DAMPER	SEER	SEASONAL ENERGY EFFICIENCY RATIO
FLA	FULL LOAD AMPS	SFD	COMBINATION SMOKE/FIRE DAMPER
FLR	FLOOR	SP	STATIC PRESSURE
FPM	FEET PER MINUTE	SYM	SYMBOL
FT	FEET		
		T & P	TEMPERATURE AND PRESSURE
GA	GAUGE	TEMP	TEMPERATURE
GCO	GRADE CLEANOUT	TYP	TYPICAL
GPM	WATER FLOW RATE (GALLONS PER MINUTE)		
		UMC	UNIFORM MECHANICAL CODE
HC	HEATING COIL	UPC	UNIFORM PLUMBING CODE
HP	HORSE POWER	URL	URINAL
HVAC	HEATING, VENTILATING, AIR CONDITIONING		
HW	HOT WATER	VTR	VENT THROUGH ROOF
HWR	HOT WATER RETURN	V	VOLTS
HWS	HOT WATER SUPPLY		
		W/	WITH
IBC	INTERNATIONAL BUILDING CODE	WB	WET-BULB
IEEC	INTERNATIONAL ENERGY CONSERVATION CODE	WC	WATER CLOSET
IFC	INTERNATIONAL FIRE CODE	WCO	WALL CLEANOUT
IFGC	INTERNATIONAL FUEL GAS CODE	WH	WATER HEATER
IMC	INTERNATIONAL MECHANICAL CODE		
IPC	INTERNATIONAL PLUMBING CODE		
NOTE:	THIS IS A STANDARD LIST OF COMMONLY USED MECHANICAL ABBREVIATIONS. SOME OF THE ABBREVIATIONS SHOWN ABOVE MAY NOT BE USED IN THIS DRAWING PACKAGE.		

ENERGY CODE COMMISSIONING COMPLIANCE NOTES

SECTION 408.2.5 DOCUMENTATION REQUIREMENTS

IT SHALL BE THE COMMISSIONING AGENT'S RESPONSIBILITY TO PROVIDE ALL BELOW NOTED DOCUMENTS WITHIN 90 DAYS OF CERTIFICATE OF OCCUPANCY:

A. AS-BUILT DRAWINGS - DRAWINGS SHALL INCLUDE THE LOCATION AND PERFORMANCE DATA OF ALL PIECES OF MECHANICAL EQUIPMENT.
A.1. AS BUILT DRAWINGS TO BE FURNISHED TO THE COMMISSIONING AGENT BY THE MECHANICAL CONTRACTOR.

B. OPERATING AND MAINTENANCE MANUALS - MANUALS SHALL INCLUDE THE FOLLOWING:

1. SUBMITTAL DATA ON ALL PIECES OF EQUIPMENT REQUIRING MAINTENANCE.
2. MANUFACTURER'S OPERATIONS AND MAINTENANCE DATA ON ALL PIECES OF EQUIPMENT. ROUTINE MAINTENANCE ACTIONS SHALL BE CLEARLY IDENTIFIED.
3. NAME AND ADDRESS AND PHONE NUMBER OF OF AT LEAST ONE (1) SERVICE PROVIDED.
4. MECHANICAL CONTROL SYSTEMS MAINTENANCE AND CALIBRATION INFORMATION INCLUDING WIRING DIAGRAMS, EQUIPMENT AND SYSTEM SCHEMATICS, AND CONTROL SEQUENCES OF OPERATIONS. DESIRED OR FIELD DETERMINED SETPOINTS SHALL BE PERMANENTLY RECORDED ON CONTROL DRAWINGS AT ALL CONTROL DEVICES, OR FOR DIGITAL CONTROL SYSTEMS, IN THE SYSTEM PROGRAMMING INSTRUCTIONS.
5. A NARRATIVE ON HOW EACH MECHANICAL SYSTEM IN INTENDED TO OPERATE, INCLUDING RECOMMENDED SETPOINTS.

C. SYSTEM BALANCE REPORT - REPORT SHALL BE IN COMPLIANCE WITH IECC 408.2.2 AND INCLUDE THE FOLLOWING:

1. ALL AIR SYSTEMS BALANCED. THIS SHALL INCLUDE ALL AIR OUTLETS. SYSTEMS SHALL BE BALANCED IN ACCORDANCE WITH IMC CHAPTER 6. AND IECC SECTION C408.2.2
2. ALL HYDRONIC SYSTEMS BALANCED. THIS SHALL INCLUDE ALL HYDRONIC BALANCING VALVES. EACH SYSTEM SHALL BE PROPERLY BALANCED TO MINIMIZE THROTTLING LOSSES, AND THEN THE PUMP IMPELLER SHALL BE TRIMMED OR PUMP SPEED SHALL BE ADJUSTED TO MEET DESIGN FLOW CONDITIONS. HYDRONIC SYSTEMS SHALL BE BALANCED IN ACCORDANCE WITH IMC CHAPTER 6. AND IECC SECTION C408.2.2.2.

D. FINAL COMMISSIONING REPORT - A REPORT OF TEST PROCEDURES AND RESULTS IDENTIFIED AS THE "FINAL COMMISSIONING REPORT" SHALL BE DELIVERED TO THE BUILDING OWNER. THE REPORT SHALL INCLUDE THE FOLLOWING:

1. LIST OF FUNCTIONAL TESTS USED DURING THE COMMISSIONING PROCESS ON EACH PIECE OF EQUIPMENT.
2. RESULTS OF ALL FUNCTIONAL TESTS ON ALL PIECES OF EQUIPMENT.
3. LIST OF DEFICIENCIES FOUND AND CORRESPONDING CORRECTIVE MEASURES EITHER IMPLEMENTED OR PROPOSED ON EACH PIECE OF EQUIPMENT.
4. LIST OF EQUIPMENT NOT ABLE TO BE FUNCTIONALLY TESTED DUE TO CURRENT CLIMATE CONDITIONS. THESE PIECES OF EQUIPMENT WILL FUNCTIONALLY TESTED ONCE CLIMATE CHANGES ALLOW.

SECTION 408.2.1 COMMISSIONING REQUIREMENTS

PRIOR TO PASSING THE FINAL MECHANICAL INSPECTION, THE REGISTERED DESIGN PROFESSIONAL (OR OTHERWISE APPROVED INDIVIDUAL) SHALL PROVIDE EVIDENCE OF THE MECHANICAL SYSTEMS COMMISSIONING AND COMPLETION IN ACCORDANCE WITH THE BELOW NOTED REQUIREMENTS:

A. COMMISSIONING PLAN - A COMMISSIONING PLAN SHALL BE DEVELOPED BY A REGISTERED DESIGN PROFESSIONAL (OR OTHERWISE APPROVED INDIVIDUAL) AND SHALL INCLUDE THE FOLLOWING:

1. A NARRATIVE OF THE ACTIVITIES THAT WILL BE ACCOMPLISHED DURING EACH PHASE OF THE COMMISSIONING PROCESS,INCLUDING THE NECESSARY INTENDED TO ACCOMPLISH EACH OF THE ACTIVITIES IN THE COMMISSIONING PROCESS DURING EACH PHASE.
2. A LISTING OF THE MECHANICAL EQUIPMENT, APPLIANCE, OR SYSTEMS INTENDED TO BE COMMISSIONED ALONG WITH AN EQUIPMENT SPECIFIC NARRATIVE ON THE TESTS FOR EACH SPECIFIC MECHANICAL EQUIPMENT, APPLIANCE, OR SYSTEM.
3. A LISTING OF THE FUNCTIONS TO BE TESTED ON EACH MECHANICAL EQUIPMENT, APPLIANCE, OR SYSTEM. FUNCTIONAL TESTING SHALL INCLUDE COMPLETE CALIBRATION ON ALL COMPONENTS, CONFIRMATION OF ALL APPLICABLE MODES OF OPERATION INCLUDING BUT NOT LIMITED TO HEATING, COOLING, VENTILATION, AND ECONOMIZER.
4. CONDITIONS UNDER WHICH THE ABOVE NOTED TESTS ARE TO BE PREFORMED. IF CLIMATE CONDITIONS PROHIBIT THE FUNCTIONAL TESTING OF CERTAIN MODES OF OPERATIONS, THEN THOSE SPECIFIC TESTS MAY BE POSTPONED UNTIL SUCH CLIMATE CONDITIONS ALLOW FOR CORRESPONDING TESTS.
5. MEASURABLE PASS/FAIL CRITERIA FOR ALL FUNCTIONAL TESTS.

B. SYSTEM ADJUSTING AND BALANCING - THE ENTIRE MECHANICAL SYSTEM SHALL BE BALANCED IN ACCORDANCE WITH PROJECT SPECIFICATIONS AND THE FOLLOWING:

1. ALL AIR SYSTEMS BALANCED. THIS SHALL INCLUDE ALL AIR OUTLETS AND ZONE TERMINAL DEVICE. SYSTEMS SHALL BE BALANCED IN ACCORDANCE WITH IMC CHAPTER 6. AND IECC SECTION C408.2.2.1.
2. ALL HYDRONIC SYSTEMS BALANCED. THIS SHALL INCLUDE ALL HYDRONIC BALANCING VALVES. EACH SYSTEM SHALL BE PROPERLY BALANCED TO MINIMIZE THROTTLING LOSSES, AND THEN THE PUMP IMPELLER SHALL BE TRIMMED OR PUMP SPEED SHALL BE ADJUSTED TO MEET DESIGN FLOW CONDITIONS. HYDRONIC SYSTEMS SHALL BE BALANCED IN ACCORDANCE WITH IMC CHAPTER 6. AND IECC SECTION C408.2.2.2.
3. ALL CONTROLS SHALL BE CALIBRATED AND ADJUSTED TO ENSURE PROPER SEQUENCE OF OPERATIONS IN ACCORDANCE WITH APPROVED PLANS AND SPECIFICATIONS.
4. ALL ECONOMIZERS SHALL BE ADJUSTED TO OPERATE IN ACCORDANCE WITH MANUFACTURER'S SPECIFICATIONS.

C. PRELIMINARY COMMISSIONING REPORT - A PRELIMINARY REPORT OF COMMISSIONING TEST PROCEDURES AND RESULTS SHALL BE COMPLETED AND CERTIFIED BY THE REGISTERED DESIGN PROFESSIONAL (OR OTHERWISE APPROVED INDIVIDUAL) AND PROVIDED TO THE BUILDING OWNER. THE REPORT SHALL INCLUDE THE FOLLOWING:

1. LIST OF DEFICIENCIES FOUND DURING THE TESTING REQUIRED BY THE COMMISSIONING PLAN THAT HAVE NOT YET BEEN CORRECTED AT THE TIME OF THE REPORT.
2. LIST OF EQUIPMENT OR SYSTEMS NOT ABLE TO BE FUNCTIONALLY TESTED DUE TO UNFAVORABLE CURRENT CLIMATE CONDITIONS. THESE PIECES OF EQUIPMENT AND SYSTEMS WILL BE FUNCTIONALLY TESTED ONCE CLIMATE CHANGES ALLOW. TESTING IS DEFERRED UNTIL CLIMATE CONDITIONS ALLOW PROPER TESTING.
3. DESCRIPTION OF NECESSARY CLIMATE CONDITIONS REQUIRED FOR FUNCTIONAL TESTING OF DEFERRED EQUIPMENT AND OR SYSTEMS.

* THE BUILDING, OR PORTION THEREOF, SHALL NOT PASS THE FINAL MECHANICAL INSPECTION UNTIL SUCH TIME AS THE CODE OFFICIAL HAS RECEIVED A LETTER OF TRANSMITTAL FROM THE BUILDING OWNER ACKNOWLEDGING THAT THE BUILDING OWNER HAS RECEIVED THE PRELIMINARY COMMISSIONING REPORT.THE CODE OFFICIAL MAY REQUIRE A COPY OF THE PRELIMINARY REPORT FOR REVIEW.

MECHANICAL AND PLUMBING DRAWINGS LEGEND

FLEXIBLE DUCTWORK	THREE WAY CONTROL VALVE
DUCTWORK	TWO WAY CONTROL VALVE
DUCTWORK BREAK	PRESSURE REDUCING VALVE
DUCTWORK OR PIPING RISE	GATE VALVE
CONCENTRIC SQUARE TO ROUND TRANSITION	REDUCER
MOTORIZED DAMPER	GLOBE VALVE
MANUAL VOLUME DAMPER	BALL VALVE
SPIN-IN FITTING W/ AIR EXTRACTOR AND HAND DAMPER (AIRFLOW)	BUTTERFLY VALVE
HIGH EFFICIENCY FITTING W/ HAND DAMPER (AIRFLOW)	BALANCE VALVE
SWITCH	CHECK VALVE
THERMOSTAT	FCO — FLOOR CLEANOUT
HUMIDISTAT	WCO — WALL CLEANOUT
TEMPERATURE SENSOR	GCO — GRADE CLEANOUT
CARBON DIOXIDE SENSOR	WATER HAMMER ARRESTOR
CARBON MONOXIDE SENSOR	FLOOR DRAIN
NITROUS OXIDE SENSOR	FLOOR SINK
DUCT SMOKE DETECTOR	GAS PRESSURE REGULATOR W/ GAS COCK
COMBINATION SMOKE/FIRE DAMPER	PRESSURE RELIEF VALVE
FIRE DAMPER	VENT-THROUGH-ROOF
SMOKE DAMPER	VENT
EQUIPMENT CALLOUT	SOIL, WASTE, OR SANITARY SEWER
TURNING VANES	AW — ACID WASTE LINE
INTAKE OR EXHAUST	AV — ACID VENT LINE
DIRECTION OF AIRFLOW	SD — STORM DRAIN
SUPPLY DIFFUSER (R-X / CFM / X'-0")	RD — ROOF DRAIN LINE
RETURN GRILLE (R-X / X'-0")	OD — OVERFLOW DRAIN LINE
EXHAUST GRILLE (R-X / CFM / X'-0")	CD — CONDENSATE DRAIN LINE
FLOOR GRILLE (R-X / CFM / X'-0")	DOMESTIC COLD WATER (CW)
CEILING EXHAUST FAN	DOMESTIC HOT WATER (HW)
TEMPERATURE GAUGE	DOMESTIC HOT WATER RETURN (HWR)
PRESSURE GAUGE (LIQUID FILLED W/ ISOLATION VALVE)	TW — TEMPERED WATER (TW)
TEMPERATURE SENSOR (DUCT OR PIPING)	MPG — MEDIUM PRESSURE NATURAL GAS
FLOW SWITCH	G — LOW PRESSURE NATURAL GAS
STAINLESS STEEL BRAIDED FLEX CONNECTION	F — FIRE SPRINKLER LINE
ELASTOMETRIC FLEX CONNECTOR	GWS — GEOTHERMAL WATER SUPPLY
SUCTION DIFFUSER	GWR — GEOTHERMAL WATER RETURN
Y TYPE STRAINER (1-1/2" OR LARGER PROVIDED W/ BLOW DOWN VALVE)	CWS — CHILLED WATER SUPPLY
FLOW DIRECTION	CWR — CHILLED WATER RETURN
DEMOLITION / EQUIPMENT TO BE REMOVED	CS — CONDENSER WATER SUPPLY
NEW TO EXISTING CONNECTION POINT	CR — CONDENSER WATER RETURN
(E) EXISTING	HWS — HEATING WATER SUPPLY
(F) FUTURE	HWR — HEATING WATER RETURN
(N) NEW	L — LIQUID REFRIGERANT LINE
REDUCED PRESSURE BACKFLOW PREVENTER	S — SUCTION REFRIGERANT LINE
DOUBLE CHECK BACKFLOW PREVENTER	SLOPE PIPE IN DIRECTION OF ARROW
UNION	PIPE ANCHOR
AIR VENT	PIPE GUIDE
TRIPLE DUTY VALVE	CAP
NOTE:	THIS IS A LIST OF COMMONLY USED MECHANICAL AND PLUMBING SYMBOLS. SOME OF THE SYMBOLS SHOWN ABOVE MAY NOT BE USED IN THIS DRAWING PACKAGE.

ENERGY CODE COMPLIANCE

A. COMPLIANCE WITH THE LATEST ADOPTED EDITION OF THE INTERNATIONAL ENERGY CONSERVATION CODE IS REQUIRED FOR THIS PROJECT. THESE NOTES COVER MANDATORY REQUIREMENTS OF THE CODE. ADDITIONAL REQUIREMENTS ARE NOTED ON THE DRAWINGS AND IN THE SPECIFICATIONS.

B. MINIMUM REQUIREMENTS FOR SUPPLY AND RETURN DUCTWORK INSULATION:

1. R-6: DUCTS LOCATED IN UNCONDITIONED SPACES (SPACE NEITHER HEATED NOR COOLED SUCH AS ABOVE CEILING SPACES, WALL SPACES, DUCT CHASES, SOFFITS, ATTICS, CRAWL SPACES, UNHEATED BASEMENTS, AND UNHEATED GARAGES).

2. R-12: DUCTS LOCATED OUTSIDE OF THE BUILDING'S INSULATION ENVELOPE (SUCH AS ABOVE THE ATTIC INSULATION).

TYPICAL INSULATION THICKNESS REQUIRED TO MEET THESE REQUIREMENTS:

1. FIBERGLASS DUCT WRAP: R-6, R-12.

2. FIBERGLASS DUCT LINER: R-6, R-12.

C. CONTRACTOR SHALL VERIFY THE R-VALUES OF THE ACTUAL INSULATION USED WITH THE MANUFACTURER. R-VALUES SHALL BE INSTALLED VALUES.

D. WHERE DUCTS USED FOR COOLING ARE EXTERNALLY INSULATED, THE INSULATION SHALL BE COVERED WITH A VAPOR RETARDER HAVING A MAXIMUM PERMEANCE OF 0.05 PERM OR ALUMINUM FOIL HAVING A MINIMUM THICKNESS OF 2 MILS. INSULATION HAVING A PERMEANCE OF 0.05 PERMS OR LESS SHALL NOT BE REQUIRED TO BE COVERED. ALL JOINTS AND SEAMS SHALL BE SEALED TO MAINTAIN THE CONTINUITY OF THE VAPOR RETARDER.

E. ALL DUCT JOINTS, SEAMS, AND CONNECTIONS SHALL BE FASTENED AND SEALED WITH WELDS, GASKETS, ADHESIVES, MASTIC-PLUS-EMBEDDED-FABRIC SYSTEMS, OR TAPES. TAPES AND MASTICS SHALL BE LISTED AND LABELED PER UL181A OR UL181B. DUCT TAPE IS NOT PERMITTED AS A SEALANT ON ANY METAL DUCTS. DUCT CONNECTIONS TO FLANGES OR EQUIPMENT SHALL BE SEALED AND MECHANICALLY FASTENED.

F. MINIMUM REQUIREMENTS (THICKNESS) FOR PIPING INSULATION SHALL BE AS FOLLOWS:

FLUID	NOMINAL PIPE DIAMETER 1/2" TO < 1-1/2"	1-1/2" TO < 4"	4" AND ABOVE
1. HEATING WATER	1-1/2"	2"	2"
2. REFRIGERANT	SEE SPECIFICATIONS		

THE ABOVE INSULATION IS BASED ON HAVING A CONDUCTIVITY NOT EXCEEDING 0.27 BTU-INCH/HOUR-FT2-°F.

G. DOMESTIC HOT WATER PIPING SYSTEMS SHALL BE INSULATED WITH 1" INSULATION HAVING A CONDUCTIVITY NOT EXCEEDING 0.27 BTU-INCH/HOUR-FT2-°F.

H. DOMESTIC WATER HEATERS WHICH ARE NOT PROVIDED WITH INTEGRAL HEAT TRAPS AND SERVE NONCIRCULATING SYSTEMS SHALL BE PROVIDED WITH HEAT TRAPS ON THE SUPPLY AND DISCHARGE PIPING AT THE WATER HEATER.

I. DOMESTIC HOT WATER SYSTEMS WITH RECIRCULATION PUMPS OR ELECTRIC HEAT TRACE SHALL BE CONTROLLED WITH 7-DAY TIME CLOCKS.

J. AN OPERATING AND MAINTENANCE MANUAL SHALL BE PROVIDED PRIOR TO ISSUANCE OF A CERTIFICATE OF OCCUPANCY. THE O&M MANUAL SHALL CONTAIN THE FOLLOWING INFORMATION AS A MINIMUM:

1. EQUIPMENT CAPACITY (INPUT & OUTPUT).

2. EQUIPMENT OPERATING AND MAINTENANCE INSTRUCTIONS.

3. CONTROL SYSTEM MAINTENANCE AND CALIBRATION INFORMATION, INCLUDING WIRING DIAGRAMS, SCHEMATICS, AND CONTROL SEQUENCES.

4. CONTROL SYSTEM SETPOINTS SHALL BE SHOWN ON CONTROL DRAWINGS, AT CONTROL DEVICES, OR IN PROGRAMMING COMMENT ON DDC SYSTEMS.

5. A COMPLETE WRITTEN NARRATIVE ON HOW EACH MECHANICAL SYSTEM IS INTENDED TO OPERATE.

MECHANICAL GENERAL NOTES

1. ALL MECHANICAL EQUIPMENT AND SYSTEMS SHALL BE INSTALLED IN ACCORDANCE WITH THE INTERNATIONAL MECHANICAL CODE (IMC) LATEST EDITION, AND ALL APPLICABLE LOCAL AND STATE CODES.
2. ALL PLUMBING EQUIPMENT AND SYSTEMS SHALL BE INSTALLED IN ACCORDANCE WITH THE LATEST ADOPTED PLUMBING CODE, AND ALL LOCAL AND STATE CODES.
3. ALL MECHANICAL AND PLUMBING EQUIPMENT SHALL BE INSTALLED PER THE MANUFACTURER'S RECOMMENDATIONS.
4. MECHANICAL CONTRACTORS SHALL RECEIVE PRIOR APPROVAL FROM THE STRUCTURAL ENGINEER BEFORE MAKING CUTS THROUGH ANY STRUCTURAL MEMBER.
5. MECHANICAL CONTRACTORS SHALL COORDINATE INSTALLATION WITH CONSTRUCTION SUPERVISOR AND WITH ALL OTHER TRADES TO AVOID CONFLICTS.
6. THE MECHANICAL CONTRACTORS SHALL VERIFY MOTOR VOLTAGES WITH THE ELECTRICAL DRAWINGS PRIOR TO ORDERING MOTORIZED EQUIPMENT AND CONTROLS.
7. SEE MECHANICAL SCHEDULE SHEET FOR SCHEDULED CAPACITIES OF ALL MECHANICAL EQUIPMENT AND MATERIALS SPECIFIED.
8. DOMESTIC WATER SERVICE IS PROVIDED WITH A DOUBLE-CHECK BACKFLOW PREVENTER ASSEMBLY.
9. THE PLUMBING CONTRACTOR IS RESPONSIBLE FOR ALL BACKFLOW DEVICES TO INSPECTED BY A CERTIFIED BACKFLOW TECHNICIAN BEFORE THE USE OF THE BUILDING POTABLE WATER SYSTEM.
10. ALL MECHANICAL EQUIPMENT TO BE PROPOSED MUST BE ON THE APPROVED LIST PRIOR TO SUBMITTALS. ALL APPROVED MANUFACTURERS MUST BE CAPABLE OF MEETING THE REQUIREMENTS OF THE SPECIFIED EQUIPMENT.
11. RUNOUT AND HOOKUP SIZES TO INDIVIDUAL PLUMBING FIXTURES CAN BE FOUND ON THE PLUMBING FIXTURE SCHEDULE.
12. PROVIDE REMOTE CEILING ACCESS BALANCE DAMPERS WITH CONCEALED CHROME PLATE COVERS FOR BALANCE DAMPERS LOCATED ABOVE HARD CEILINGS.
13. PAINT VTR'S, FLUES, EXHAUST CAPS, AND OTHER MECHANICAL ITEMS ON THE ROOF TO MATCH THE ROOF COLOR.
14. INSULATED FLEXIBLE DUCTWORK--IN LENGTHS OF 6'-0" OR LESS--MAY BE USED FOR RUNOUTS TO AIR TERMINALS.
15. MAINTAIN MINIMUM 10'-0" DISTANCE BETWEEN ALL FRESH AIR INTAKES AND EXHAUST OR GAS FLUE DISCHARGES.
16. LOCATE ACCESS HATCHCES SO AS TO PROVIDE OPTIMUM SERVICEABILITY TO EQUIPMENT AND/OR VALVING. SEE ARCHITECTURAL SPECIFICATION FOR TYPE AND COLOR. COORDINATE LOCATION WITH ARCHITECTURAL, STRUCTURAL, AND LIGHTING.
17. WHENEVER THERE IS A DISCREPANCY BETWEEN THE RUNOUT DUCT SIZE SHOWN ON THE PLANS AND THAT SHOWN IN THE SCHEDULE, ALWAYS USE THE LARGER OF THE TWO DUCT SIZES.

MUSGROVE ENGINEERING, P.A.
234 S. Whispertwood Way
Boise, ID 83709
208.384.0585
645 West 25th Street
Idaho Falls, ID 83402
208.523.2862
www.musgrovepa.com

Project No. 23-239

PROFESSIONAL ENGINEER — LICENSED — 16683 — 5/14/2024 — STATE OF IDAHO — CHRISTOPHER DYKE

MILLER STAUFFER ARCHITECTS
601 E. FRONT AVE., STE 201
COEUR D' ALENE, IDAHO 83814
P 208.664.1773 F 208.667.3174
WWW.MILLERSTAUFFER.COM

MECHANICAL COVERSHEET

BID SET

5/13/2024

D-1 Testing Laboratory
600 W Prairie Ave
Coeur d'Alene, ID 83814

LICENSED ARCHITECT AR-984931 MICHEAL P. WALKER STATE OF IDAHO

No.	Description	Date

PROJECT NUMBER 23239
PRINCIPAL Designer
PROJECT MANAGER Author

M0.0

5/14/2024 9:48:04 AM Autodesk Docs://TD D-1 Laboratory/23239 ITD D1 Lab MEP_r23.rvt

MECHANICAL COMCHECK COMPLIANCE REPORT

COM*check* Software Version COMcheckWeb

Mechanical Compliance Certificate

Project Information

Energy Code: 2018 IECC
Project Title: ITD D1 Lab
Location: Coeur d'Alene, Idaho
Climate Zone: 5b
Project Type: New Construction

Construction Site: Owner/Agent: Designer/Contractor:

Additional Efficiency Package(s)
Credits: 1.0 Required 1.0 Proposed
Reduced Lighting Power, 1.0 credit

Mechanical Systems List

Quantity System Type & Description

1 F-1 / CU-1 (Single Zone):
Heating: 1 each - Central Furnace, Gas, Capacity = 80 kBtu/h
Proposed Efficiency = 95.00% Et, Required Efficiency: 80.00 % Et or 80% AFUE
Cooling: 1 each - Split System, Capacity = 52 kBtu/h, Air-Cooled Condenser, Unknown Economizer
Proposed Efficiency = 14.00 SEER, Required Efficiency = 13.00 SEER
Proposed Part Load Efficiency = 0.00 , Required Part Load Efficiency = 0.00
Fan System: FAN SYSTEM 1 -- Compliance (Motor nameplate HP and fan efficiency method) : Passes

Fans:
FAN 1 Supply, Constant Volume, 2250 CFM, 1.0 motor nameplate hp, 90.0 fan efficiency grade, 90.0 total fan efficiency, 90.0 design fan efficiency , fan exception: Single fan <= 5HP

1 DFC-1 / DCU-1 (Single Zone):
Cooling: 1 each - Split System, Capacity = 25 kBtu/h, Air-Cooled Condenser, Unknown Economizer
Proposed Efficiency = 18.20 SEER, Required Efficiency = 13.00 SEER
Proposed Part Load Efficiency = 0.00 , Required Part Load Efficiency = 0.00
Fan System: FAN SYSTEM 2 -- Compliance (Motor nameplate HP and fan efficiency method) : Passes

Fans:
FAN 2 Supply, Constant Volume, 640 CFM, 0.1 motor nameplate hp, 90.0 fan efficiency grade, 90.0 total fan efficiency, 90.0 design fan efficiency , fan exception: Single fan <= 5HP

1 AHU-1 (Multiple-Zone):
Heating: 1 each - Central Furnace, Gas, Capacity = 1125 kBtu/h
Proposed Efficiency = 80.00% Et, Required Efficiency: 80.00 % Et
Cooling: 1 each - Single Package DX Unit, Capacity = 502 kBtu/h, Air-Cooled Condenser, Air Economizer
Proposed Efficiency = 10.80 EER, Required Efficiency = 9.80 EER
Proposed Part Load Efficiency = 11.50 IEER, Required Part Load Efficiency = 11.40 IEER
Fan System: FAN SYSTEM 3 -- Compliance (Brake HP and fan efficiency method) : Passes

Fans:
FAN 3 Supply, Multi-Zone VAV, 13000 CFM, 20.0 motor nameplate hp, 13.4 design brake hp (13.4 max. BHP), 80.0 fan efficiency grade, 80.0 total fan efficiency, 80.0 design fan efficiency
Pressure Drop Credits:
Fully ducted return and/or exhaust air systems, 1.5735 credit
Particulate filtration credit: MERV 13 through 15, 2.8322 credit
Sound attenuation section, 0.4720 credit

2 B-1 / B-2:
Heating: Hot Water Boiler, Capacity 285 kBtu/h, Gas
Proposed Efficiency: 95.00 % AFUE, Required Efficiency: 82.00 % AFUE

Mechanical Compliance Statement

Compliance Statement: The proposed mechanical design represented in this document is consistent with the building plans, specifications, and other calculations submitted with this permit application. The proposed mechanical systems have been designed to meet the 2018 IECC requirements in COM*check* Version COMcheckWeb and to comply with any applicable mandatory requirements listed in the Inspection Checklist.

Chris Dyke, PE — Name - Title | [signature] — Signature | 5/8/2024 — Date

OFFICE AREAS MECHANICAL LOADS ZONE SUMMARY

MUSGROVE ENGINEERING, PA
234 S. WHISPERWOOD WAY BOISE, IDAHO 83709
Zone Summary

PROJECT: *ITD D1 Lab* — Design Conditions: Winter 3, Summer 92
COMPUTED BY: *ED* — DATE: 8-May-24 — CHK BY: TN

	Zone Reference	FLOOR SQ. FT.	Heating Load BTUH	Heating Load kW	Sensible Cooling Load BTUH	Total Cooling Load BTUH	NOMINAL TON *(12000-BTUH/TON)*	SQ. FT PER NOMINAL TON	NUMBER OF PEOPLE	OSA	EXHAUST	Unit Selection Size TONS
1	ZONE 1: Rest. 102	75	1,524	0	504	504	0.0	1786.6	0	0	100	F-1 / CU-1
2	ZONE 2: Lobby 101	150	4,469	1	2,622	3,183	0.3	565.4	2	24	0	F-1 / CU-1
3	ZONE 3: Break Room / Conference 104	255	14,054	4	11,910	14,715	1.2	207.9	10	82	0	F-1 / CU-1
4	ZONE 4: Rest 103	63	451	0	282	282	0.0	2685.2	0	0	100	F-1 / CU-1
5	ZONE 5: Janitor 105	55	393	0	526	807	0.1	818.1	1	0	100	F-1 / CU-1
6	ZONE 6: Office 135	165	4,709	1	4,018	4,299	0.4	460.6	1	19	0	F-1 / CU-1
7	ZONE 7: Lab Storage 109	70	1,187	0	504	504	0.0	1665.7	0	11	0	N/A
8	ZONE 8: Hallway 111	350	6,525	2	4,104	4,104	0.3	1023.5	0	26	0	F-1 / CU-1
9	ZONE 9: Cubicles 108-116	672	18,549	5	15,392	16,514	1.4	488.3	4	75	0	F-1 / CU-1
10	ZONE 10: Office Mechanical 113	75	536	0	335	335	0.0	2685.2	0	0	0	N/A
11	ZONE 11: Wellness 107	65	783	0	379	379	0.0	2056.0	0	5	0	F-1 / CU-1
12	ZONE 12: Office 114	165	7,852	2	7,429	7,709	0.6	256.8	1	19	0	F-1 / CU-1
13	ZONE 13: Material Storage 128	401	14,805	4	4,268	4,268	0.4	1127.5	0	0	0	ELEC HTRS
	Total Loads =	2561	75,837	22	52,274	57,603	4.8	534	19	260	300	

Energy Compliance Calculations *(Not Equipment Schedule)*
Equipment is selected based on next available size
Load calculations based on ASHRAE CLTD/CLF - Cooling Load Temperature Difference/Cooling Load Factor Methods

LABORATORY AREAS MECHANICAL LOADS ZONE SUMMARY

MUSGROVE ENGINEERING, P.A.
234 S. WHISPERWOOD WAY, BOISE, ID 83709
VAV Calculations

Project Information		Design Condition Temperatures (°F)		Air Heat Factors		System Design Temperatures (°F)		VAV Design Inputs	
PROJECT NAME:	ITD D1 Lab Calc	Winter Outdoor:	3	Sensible:	1.00	Entering Water (EWT):	140	System Population (P_s)[2]:	23
DATE:	8-May-24	Summer Outdoor:	92	Latent:	0.84	Leaving Water (LWT):	120	Ventilation Efficiency (E_v):	0.8
COMPUTED BY:	CD	Winter Indoor:	70			VAV Supply Air (LAT):	95	Occupancy Diversity (D):	1.00
CHECKED BY:	TN	Summer Indoor:	75			AHU Supply Air (EAT):	55	Max OSA Fraction ($Z_{p,max}$)[3]:	0.38

	Zone Reference	TU-#	People (P_z)	Area (ft²)	Ceiling Height (ft)	Air Change Rate (ACH)	VENTILATION Min. Supply CFM (from ACH)	Vent. OSA (V_{oz})	Min. Vent. OSA ($(R_a*A_z)/E_v$)	COOLING Sensible Cooling Load (BTUH)	Cooling Airflow (CFM)	Heating Load (BTUH)	Required Heating Airflow (CFM)	HEATING Design Heating Airflow (CFM)	Re-Heat (BTUH)	Total TU Heating Capacity (BTUH)	Re-Heat Fluid Flowrate (GPM)	Heating Supply Air Temp. (°F)	REQUIRED AIRFLOW Required Supply Airflow (CFM)	Min. Supply Airflow (CFM)	DESIGN RESETS Design Max. Airflow (CFM)[1]	Design Min. Airflow (CFM)[1]	Heating Design Airflow (CFM)[1]	OSA Fraction at Max.	OSA Fraction at Min.
1	ZONE L1: Residency Lab 131		4	795	10	6	795	229	179	30391	1524	19497	702	795	11892	31389	3.1	95	1524	795	1524	795	795	0.15	0.23
2	ZONE L2: Noise Room 130		1	112	10	6	112	38	25	4821	242	2334	94	112	1675	4010	0.4	91	242	700	242	700	112	0.16	0.04
3	ZONE L3: Soil/Aggregate 126		2	327	10	6	327	99	74	11097	556	3423	137	327	4891	8314	0.8	88	556	330	556	330	327	0.18	0.22
4	ZONE L4: Asphalt Lab 124		3	405	10	6	405	129	91	13926	698	4240	170	405	6050	10298	1.0	88	698	700	698	700	405	0.18	0.13
5	ZONE L5: D-1 Lab 125		4	710	15	6	1083	210	160	13031	693	15569	624	1083	16196	31765	3.2	94	1083	1083	1083	1083	1083	0.19	0.15
6	ZONE L6: Concrete 119		2	280	10	6	280	88	63	11669	585	6327	254	280	4100	10515	1.1	93	585	280	585	280	280	0.15	0.23
7	ZONE L7: Material Lab 118		2	282	10	6	282	88	63	14375	721	5040	202	282	4210	9259	0.9	88	721	700	721	700	282	0.12	0.09
8	ZONE L8: Asphalt Lab 117		3	403	10	6	403	120	91	16870	846	7814	313	403	6020	13843	1.4	89	846	700	846	700	403	0.15	0.13
9	ZONE L9: General Lab 135		2	235	10	6	235	78	53	5461	274	2460	99	235	3515	5975	0.6	88	274	240	274	240	235	0.28	0.22
	Totals:		23	3549			3922	1088	799	122442	6139	66704	2876	3922	59683	119292	12.5	791	6520	5520	6520	5520		0.17	0.14

	Max Airflow	Min Airflow
Supply Air (CFM):	6520	5520
Return Air (CFM):	5442	4729
Outside Air (V_{ot})(CFM):	1096	799
OSA Frac.	0.17	0.14

Footnotes:
1- Purple columns should be overwritten with design values.
2- System population defaults to the sum of all zone occupants, if the overall population is known, this value may be overwritten. Reducing this value will reduce the OSA intake required.
3- If not less than 0.55, see Appendix A of ASHRAE 62.1 for alternative calculation procedures.

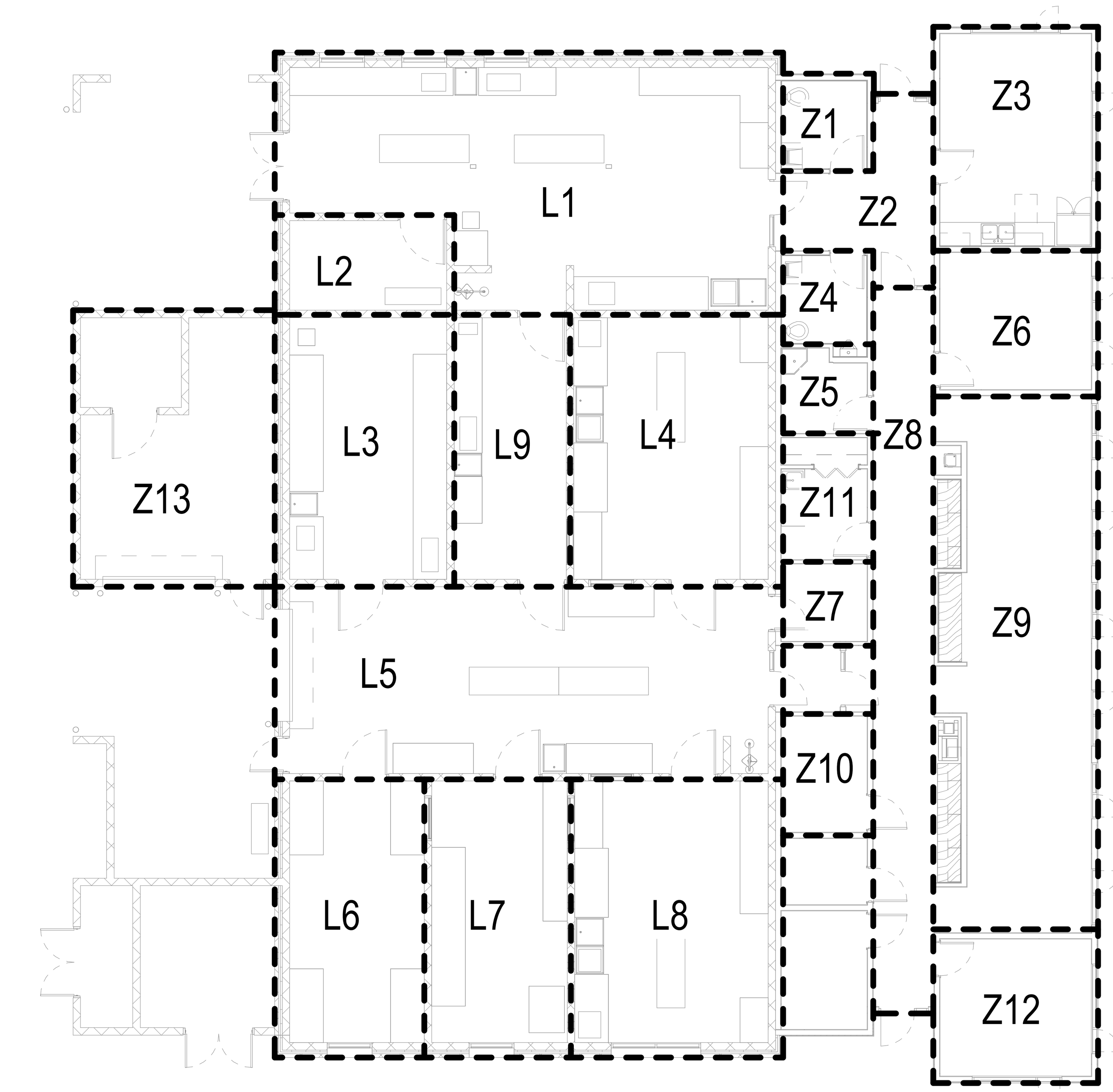

(1) ZONE PLAN
3/32" = 1'-0"

MUSGROVE ENGINEERING, P.A.
234 S. Whisperwood Way
Boise, ID 83709
208.384.0585
645 West 25th Street
Idaho Falls, ID 83402
208.523.2862
www.musgrovepa.com
Project No. 23-239

PROFESSIONAL ENGINEER LICENSED 16683 5/14/2024 STATE OF IDAHO CHRISTOPHER DYKE

MILLER STAUFFER ARCHITECTS
601 E. FRONT AVE. STE 201
COEUR D' ALENE, IDAHO 83814
P 208.664-1773 F 208.667.3174
WWW.MILLERSTAUFFER.COM

HVAC COMCHECK & LOAD SUMMARY
BID SET
5/13/2024

D-1 Testing Laboratory
600 W Prairie Ave
Coeur d'Alene, ID 83814

LICENSED ARCHITECT AR-984931 MICHEAL P. WALKER STATE OF IDAHO

No.	Description	Date

PROJECT NUMBER 23239
PRINCIPAL Designer
PROJECT MANAGER Author

M0.1

Autodesk Docs://ITD D-1 Laboratory/23239 ITD D1 Lab MEP_r23.rvt
5/14/2024 9:48:04 AM

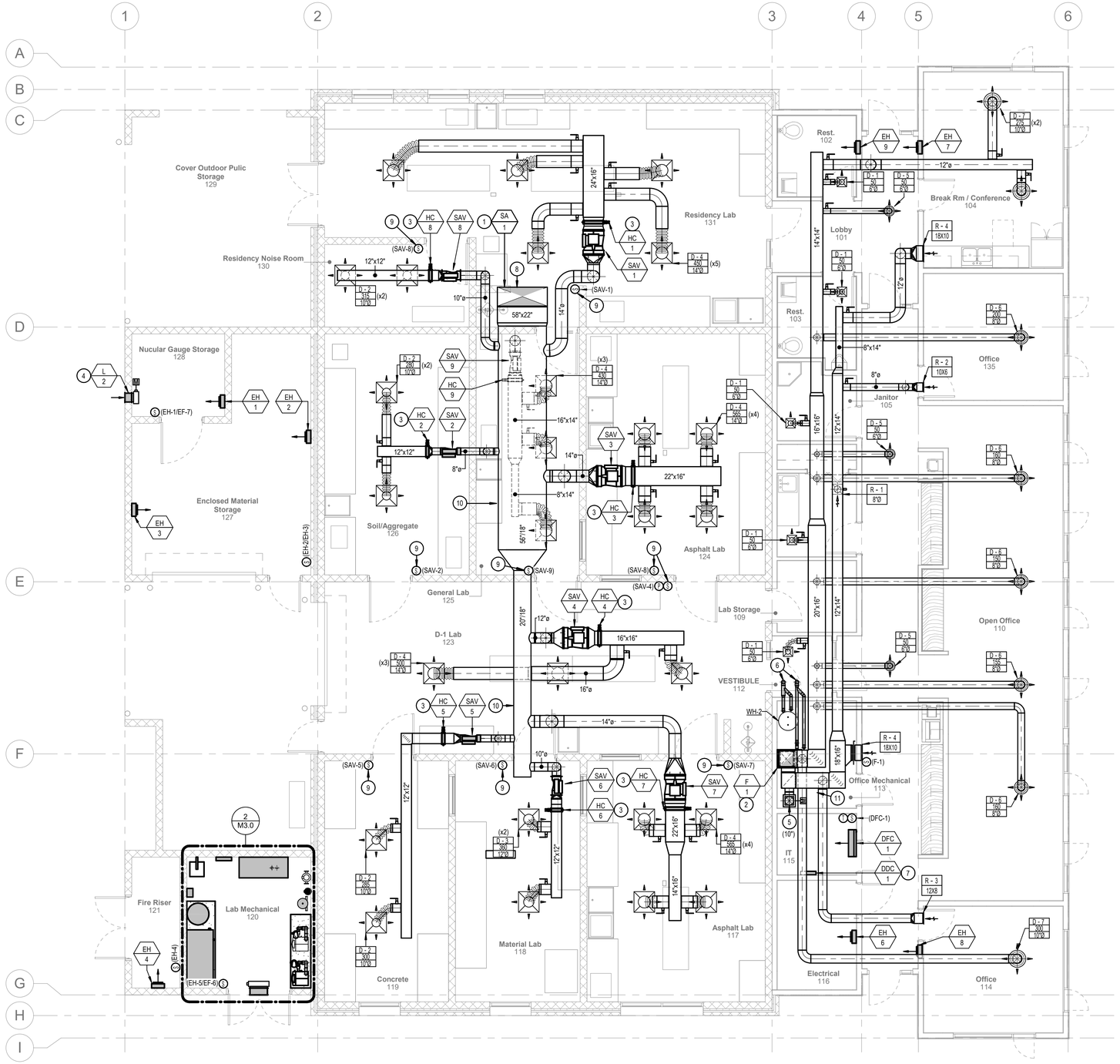

HVAC PLAN

3/16" = 1'-0"

MUSGROVE ENGINEERING, P.A.
234 S. Whisperwood Way
Boise, ID 83709
208.384.0585
645 West 25th Street
Idaho Falls, ID 83402
208.523.2862
www.musgroveepa.com

Project No. 23-239

PROFESSIONAL ENGINEER LICENSED 16683 5/14/2024 STATE OF IDAHO CHRISTOPHER DYKE

KEYED NOTES:

(#) SYMBOL USED FOR CALLOUT

1. TRANSITION 56"X18" OVAL DUCT TO 58"X22" RECTANGULAR DUCT AND PROVIDE SOUND ATTENUATOR ON 90DEG ELBOW. ROUTE DUCTWORK UP AND CONNECT TO EQUIPMENT ABOVE ON ROOF. SEE MECHANICAL ROOF PLAN FOR CONTINUATION.
2. SEE FURNACE INSTALLATION DETAIL.
3. SEE HOT WATER COIL INSTALLATION DETAIL.
4. INSTALL LOUVER 9'-0" A.F.F.
5. ROUTE 10" ROUND DUCT UP FROM BELOW AND CONNECT TO PENTHOUSE ON ROOF.
6. ROUTE CONCENTRIC VENTS FOR WH-2 & F-1 UP TO ROOF. SEE ROOF PLAN FOR CONTINUATION.
7. COORDINATE LOCATION OF DDC PANELS WITH DDC CONTRACTOR PRIOR TO INSTALLATION.
8. ROUTE 58"X22" SUPPLY DUCTWORK UP TO AIR HANDLER ON ROOF ABOVE. TRANSITION AND CONNECT TO AIR HANDLING UNIT.
9. INSTALL COMBINATION TEMPERATURE & HUMIDITY SENSOR ON WALL 42" A.F.F. COORDINATE WITH OTHER TRADES PRIOR TO FINAL INSTALLATION.
10. ROUTE SUPPLY DUCTWORK MAIN TIGHT TO STRUCTURE. COORDINATE DUCT ROUTING LOCATIONS WITH OTHER TRADES PRIOR TO FINAL INSTALLATION.
11. PROVIDE DUCT SMOKE DETECTOR ON RETURN DUCT.

LAB EQUIPMENT LIST

TAG	EQUIPMENT NAME	MOUNTING	VENTILATION	OWNER SUPPLIED	CONSTRUCTION MANAGER SUPPLIED	INSTALLED BY	EXISTING	NEW	QTY
EQ1	AGGREGATE WASH	COUNTER		Y		ITD	2		2
EQ2	ASPHALT BATH WITH OWNER PROVIDED SHELF ABOVE	IN SINK		Y		ITD	1	3	4
EQ3	CONCRETE BATH	STAND		N	Y	Contractor		2	2
EQ4	NOT USED							1	1
EQ5	CONCRETE GRINDER	FLOOR		Y		ITD	1		1
EQ6	CONVECTION OVEN	36" COUNTER		Y		ITD	4		4
EQ7	FORNEY COMPRESSION MACHINE	FLOOR		Y		ITD	1		1
EQ8	GILSON PORTA SCREEN	FLOOR	SNORKEL HOOD	Y		ITD	1		1
EQ9	GILSON TESTING SCREEN	FLOOR	SNORKEL HOOD	Y		ITD	1		1
EQ10	GREVE BENCH OVEN	36" COUNTER	CANOPY HOOD	Y		ITD		6	6
EQ11	HAMBURG WHEEL TRACKER	FLOOR		Y		ITD		1	1
EQ12	HEATED TABLE	FLOOR		Y		ITD		3	3
EQ13	IDEAL CT	COUNTER		Y		ITD		1	1
EQ14	INFRATEST EXTRACTOR	FLOOR	CANOPY HOOD	Y		ITD		1	1
EQ15	INSTRUCTEK CORELOK	26" COUNTER		Y		ITD	1	2	3
EQ16	INSTRUCTEK CORESRY	26" COUNER		Y		ITD	1	2	3
EQ17	LAB BBQ	OUTDOORS		Y		ITD	1		1
EQ18	MARY ANN LABORATORY SIFTER	FLOOR		Y		ITD	2	2	4
EQ19	NICAT LAB OVEN	36" COUNTER	CANOPY HOOD	Y		ITD	4	2	6
EQ20	PINE GYRATORY COMPACTOR	FLOOR		Y		ITD	2	1	3
EQ21	PLOOG COMPACTOR	BOLT TO CONCRETE		Y		ITD	1		1
EQ22	PROCTOR BLOCK	FLOOR		Y		ITD	2		2
EQ23	RICE TABLE (GILSON VIBRO-DEAIRATOR, PUMP SAVER, AUTORICE CONTROLLER, SMALL COMPRESSOR) WITH OWNER PROVIDED SHELF/STAND	36" COUNTER		Y		ITD	2	1	3
EQ24	ROTARY EVAPORATOR	36" COUNTER	CANOPY HOOD	Y		ITD		1	1
EQ25	S.E. SYSTEM	36" COUNTER		Y		ITD	2		2
EQ26	SAW	FLOOR		Y		ITD	1		1
EQ27	SCALE	COUNTER		Y		ITD	4		4
EQ28	THERMO CHILLER	36" COUNTER		Y		ITD		1	3
EQ29	ULTRASONIC CLEANER	COUNTER		Y		ITD	1		1

MILLER STAUFFER ARCHITECTS
601 E. FRONT AVE., STE 201
COEUR D' ALENE, IDAHO 83814
P 208.664.1773 F 208.667.3174
WWW.MILLERSTAUFFER.COM

HVAC FLOOR PLAN

BID SET

5/13/2024

D-1 Testing Laboratory
600 W Prairie Ave
Coeur d'Alene, ID 83814

LICENSED ARCHITECT AR-984931 MICHEAL P. WALKER STATE OF IDAHO

No.	Description	Date

PROJECT NUMBER 23239
PRINCIPAL Designer
PROJECT MANAGER Author

M1.0

5/14/2024 9:48:08 AM Autodesk Docs://ITD D-1 Laboratory/23239 ITD D1 Lab MEP_r23.rvt

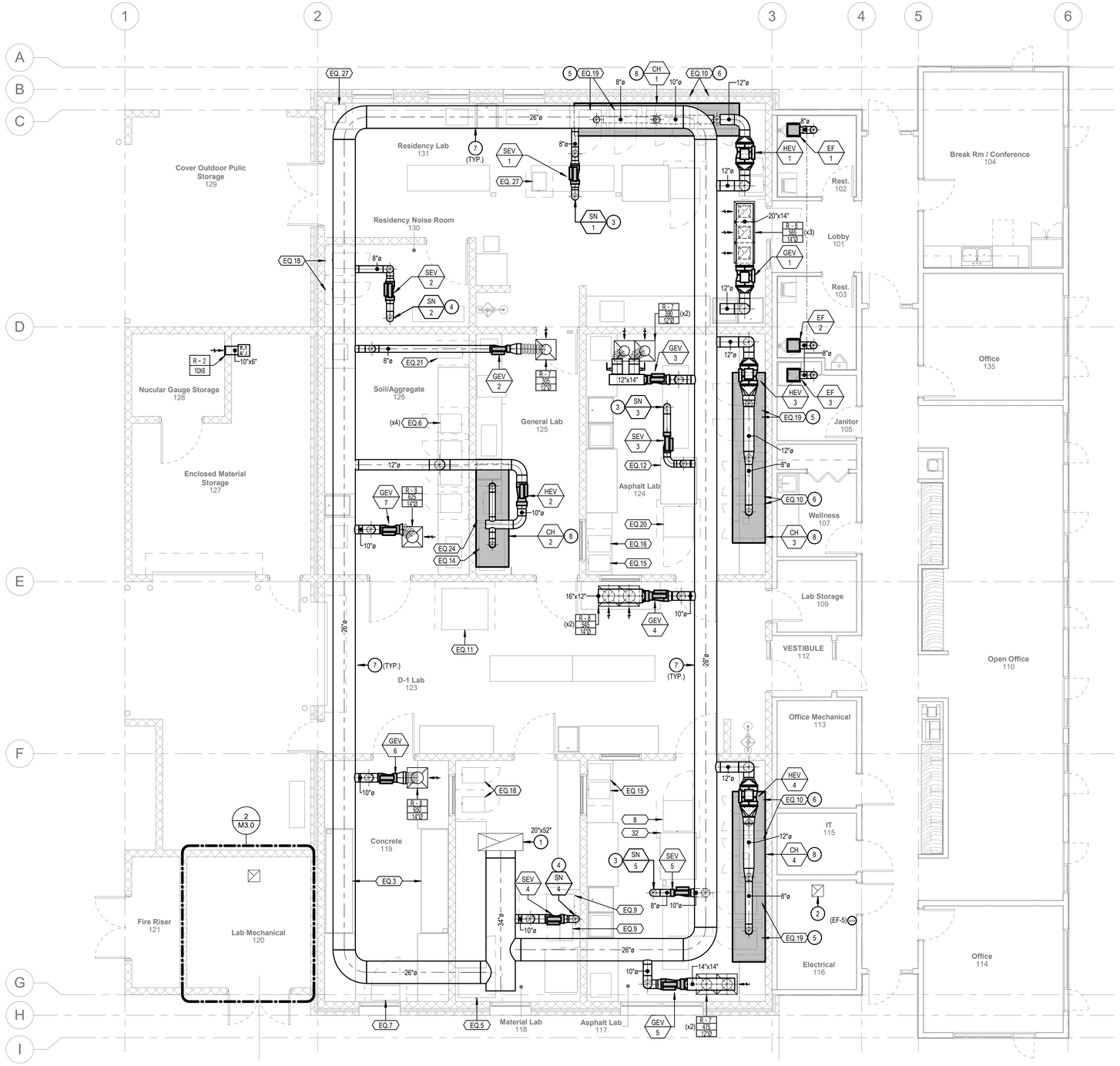

EXHAUST PLAN

3/16" = 1'-0"

MUSGROVE ENGINEERING, P.A.
234 S. Whisperwood Way
Boise, ID 83709
208.384.0585
645 West 25th Street
Idaho Falls, ID 83402
208.523.2862
www.musgrovepa.com

Project No. 23-239

PROFESSIONAL ENGINEER LICENSED 16683 5/14/2024 STATE OF IDAHO CHRISTOPHER DYKE

KEYED NOTES:

(#) SYMBOL USED FOR CALLOUT

1. ROUTE EXHAUST DUCT UP AND TRANSITION TO LEF-1 PLENUM OPENING. COORDINATE WITH STRUCTURE TO ROUTE DUCT THROUGH JOISTS. SEE MECHANICAL ROOF PLAN FOR CONTINUATION.
2. EXTEND A FULL SIZE DUCT FROM THE ROOF-MOUNTED EXHAUST FAN THROUGH THE CEILING. TERMINATE THE DUCT WITH AN EXPANDED METAL SCREEN WITH A 1" FRAME. PAINT THE EXPANDED METAL AND ALL VISIBLE DUCTWORK THE SAME COLOR AS THE CEILING.
3. ROUTE 8" DUCT DOWN TO SNORKEL HOOD. PROVIDE WITH CEILING MOUNT BRACKET.
4. ROUTE 8" DUCT DOWN TO SNORKEL HOOD. PROVIDE WITH WALL MOUNT BRACKET.
5. ROUTE 3" STAINLESS STEEL FLEXIBLE FLUE DUCT FROM NCAT TO HOOD INLET. SUPPORT FLUE WITH BRACKET AND TERMINATE INDIRECTLY BELOW HOOD OPENING. PROVIDE WITH MANUAL DAMPER. (TYPICAL OF 2)
6. ROUTE 4" FLUE DUCT 2" ABOVE OVEN TO HOOD INLET. SUPPORT FLUE WITH BRACKET AND TERMINATE INDIRECTLY BELOW HOOD OPENING. (TYPICAL OF 2)
7. ROUTE EXHAUST DUCTWORK MAINS TIGHT TO STRUCTURE. COORDINATE DUCT ROUTING LOCATIONS WITH OTHER TRADES PRIOR TO FINAL INSTALLATION.
8. INSTALL CANOPY HOOD TIGHT TO WALL. PROVIDE WITH WALL BRACKETS AND ALL THREADS FOR SUPPORT FROM STRUCTURE. COORDINATE ADDITIONAL REQUIREMENTS WITH MANUFACTURER PRIOR TO FINAL INSTALLATION.

LAB EQUIPMENT LIST

TAG	EQUIPMENT NAME	MOUNTING	VENTILATION	OWNER SUPPLIED	CONSTRUCTION MANAGER SUPPLIED	INSTALLED BY	EXISTING	NEW	QTY
EQ1	AGGREGATE WASH	COUNTER		Y		ITD	2		2
EQ2	ASPHALT BATH WITH OWNER PROVIDED SHELF ABOVE	IN SINK		Y		ITD	1	3	4
EQ3	CONCRETE BATH	STAND		N	Y	Contractor		2	2
EQ4	NOT USED								1
EQ5	CONCRETE GRINDER	FLOOR		Y		ITD	1		1
EQ6	CONVECTION OVEN	36" COUNTER		Y		ITD	4		4
EQ7	FORNEY COMPRESSION MACHINE	FLOOR		Y		ITD	1		1
EQ8	GILSON PORTA SCREEN	FLOOR	SNORKEL HOOD	Y		ITD	1		1
EQ9	GILSON TESTING SCREEN	FLOOR	SNORKEL HOOD	Y		ITD	1		1
EQ10	GREVE BENCH OVEN	36" COUNTER	CANOPY HOOD	Y		ITD		6	6
EQ11	HAMBURG WHEEL TRACKER	FLOOR		Y		ITD		1	1
EQ12	HEATED TABLE	FLOOR		Y		ITD		3	3
EQ13	IDEAL CIT	COUNTER		Y		ITD		1	1
EQ14	INFRATEST EXTRACTOR	FLOOR	CANOPY HOOD	Y		ITD		1	1
EQ15	INSTROTECH CORELOK	36" COUNTER		Y		ITD	1	2	3
EQ16	INSTROTEK COREDRY	28" COUNNER		Y		ITD	1	2	3
EQ17	LAB BBQ	OUTDOORS		Y		ITD	1		1
EQ18	MARY ANN LABORATORY SIFTER	FLOOR		Y		ITD	2	2	4
EQ19	NCAT LAB OVEN	36" COUNTER	CANOPY HOOD	Y		ITD	4	2	6
EQ20	PINE GYRATORY COMPACTOR	FLOOR		Y		ITD	2	1	3
EQ21	PLOOG COMPACTOR	BOLT TO CONCRETE		Y		ITD	1		1
EQ22	PROCTOR BLOCK	FLOOR		Y		ITD	2		2
EQ23	RICE TABLE (GILSON VIBRO-DEAIRATOR, PUMP SAVER, AUTOFICE CONTROLLER, SMALL COMPRESSOR) WITH OWNER PROVIDED SHELF/STAND	36" COUNTER		Y		ITD	2	1	3
EQ24	ROTARY EVAPORATOR	36" COUNTER	CANOPY HOOD	Y		ITD		1	1
EQ25	S.E. SYSTEM	36" COUNTER		Y		ITD	2		2
EQ26	SAW	FLOOR		Y		ITD	1		1
EQ27	SCALE	COUNTER		Y		ITD	4		4
EQ28	THERMO CHILLER	36" COUNTER		Y		ITD		1	1
EQ29	ULTRASONIC CLEANER	COUNTER		Y		ITD	1		1

MILLER STAUFFER ARCHITECTS

601 E. FRONT AVE., STE 201
COEUR D' ALENE, IDAHO 83814
P 208.664.1773 F 208.667.3174
WWW.MILLERSTAUFFER.COM

EXHAUST FLOOR PLAN

BID SET
5/13/2024

D-1 Testing Laboratory
600 W Prairie Ave
Coeur d'Alene, ID 83814

LICENSED ARCHITECT AR-984931 MICHEAL P. WALKER STATE OF IDAHO

No.	Description	Date

PROJECT NUMBER 23239
PRINCIPAL Designer
PROJECT MANAGER Author

M1.1

5/14/2024 9:48:11 AM Autodesk Docs://ITD D-1 Laboratory/23239 ITD D1 Lab MEP_/23.rvt

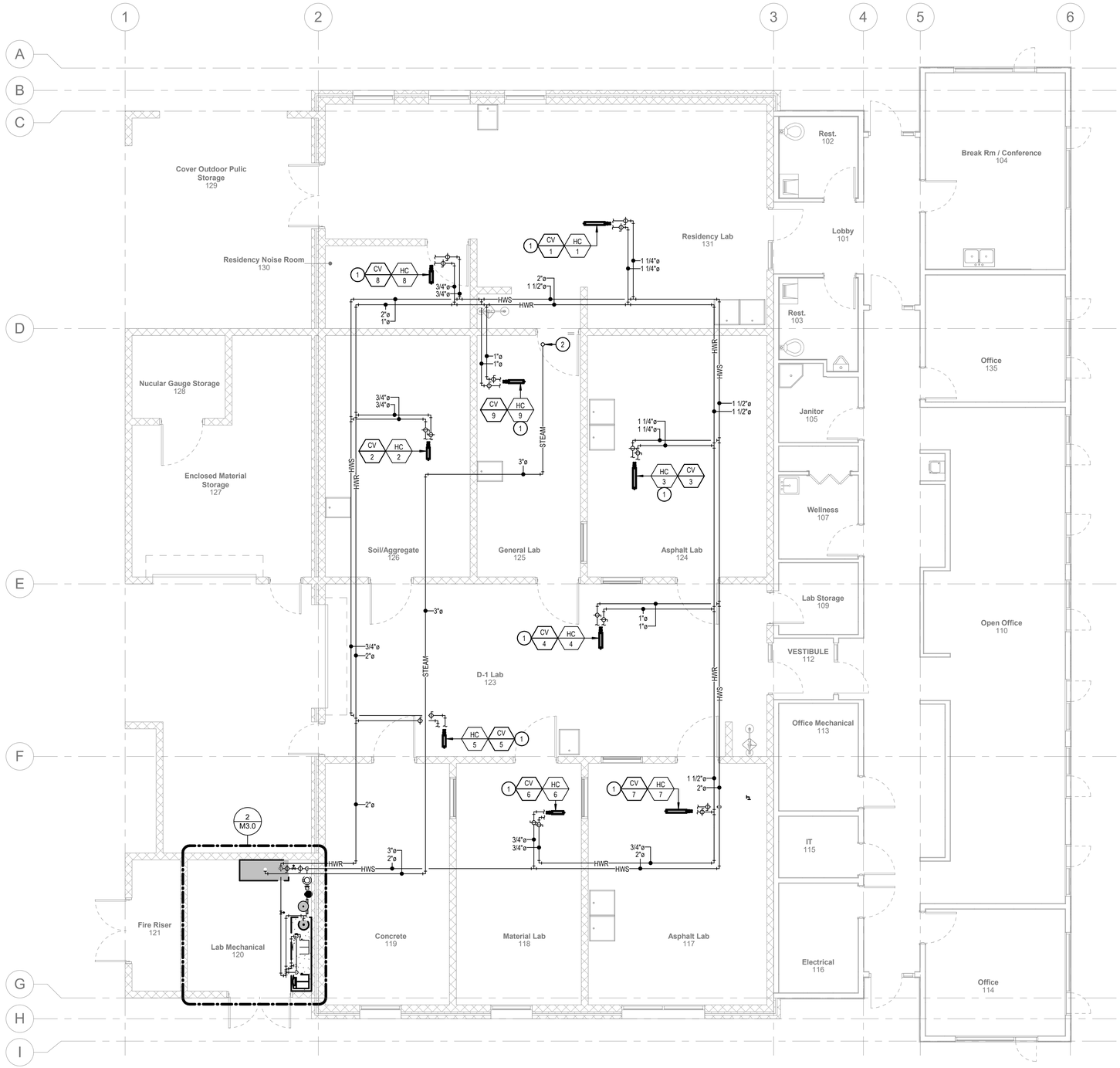

HYDRONIC PLAN

3/16" = 1'-0"

MUSGROVE ENGINEERING, P.A.
234 S. Whispenwood Way
Boise, ID 83709
208.384.0585
645 West 25th Street
Idaho Falls, ID 83402
208.523.2862
www.musgrovepa.com

Project No. 23-239

PROFESSIONAL ENGINEER LICENSED 16683 5/14/2024 STATE OF IDAHO CHRISTOPHER DYKE

KEYED NOTES:

(#) SYMBOL USED FOR CALLOUT

1. SEE HOT WATER COIL PIPING DETAIL FOR INSTALLATION REQUIREMENTS.
2. ROUTE 3" STEAM LINE UP TO AIR HANDLING UNIT ON ROOF. SEE ROOF PLAN FOR CONTINUATION.

MILLER STAUFFER ARCHITECTS
601 E. FRONT AVE., STE 201
COEUR D' ALENE, IDAHO 83814
P 208.664.1773 F 208.667.3174
WWW.MILLERSTAUFFER.COM

HYDRONIC FLOOR PLAN

BID SET

5/13/2024

D-1 Testing Laboratory
600 W Prairie Ave
Coeur d'Alene, ID 83814

LICENSED ARCHITECT AR-984931 MICHEAL P. WALKER STATE OF IDAHO

No.	Description	Date

PROJECT NUMBER 23239
PRINCIPAL Designer
PROJECT MANAGER Author

M1.2

5/14/2024 9:48:14 AM Autodesk Docs://ITD D-1 Laboratory/23239 ITD D1 Lab MEP_r23.rvt

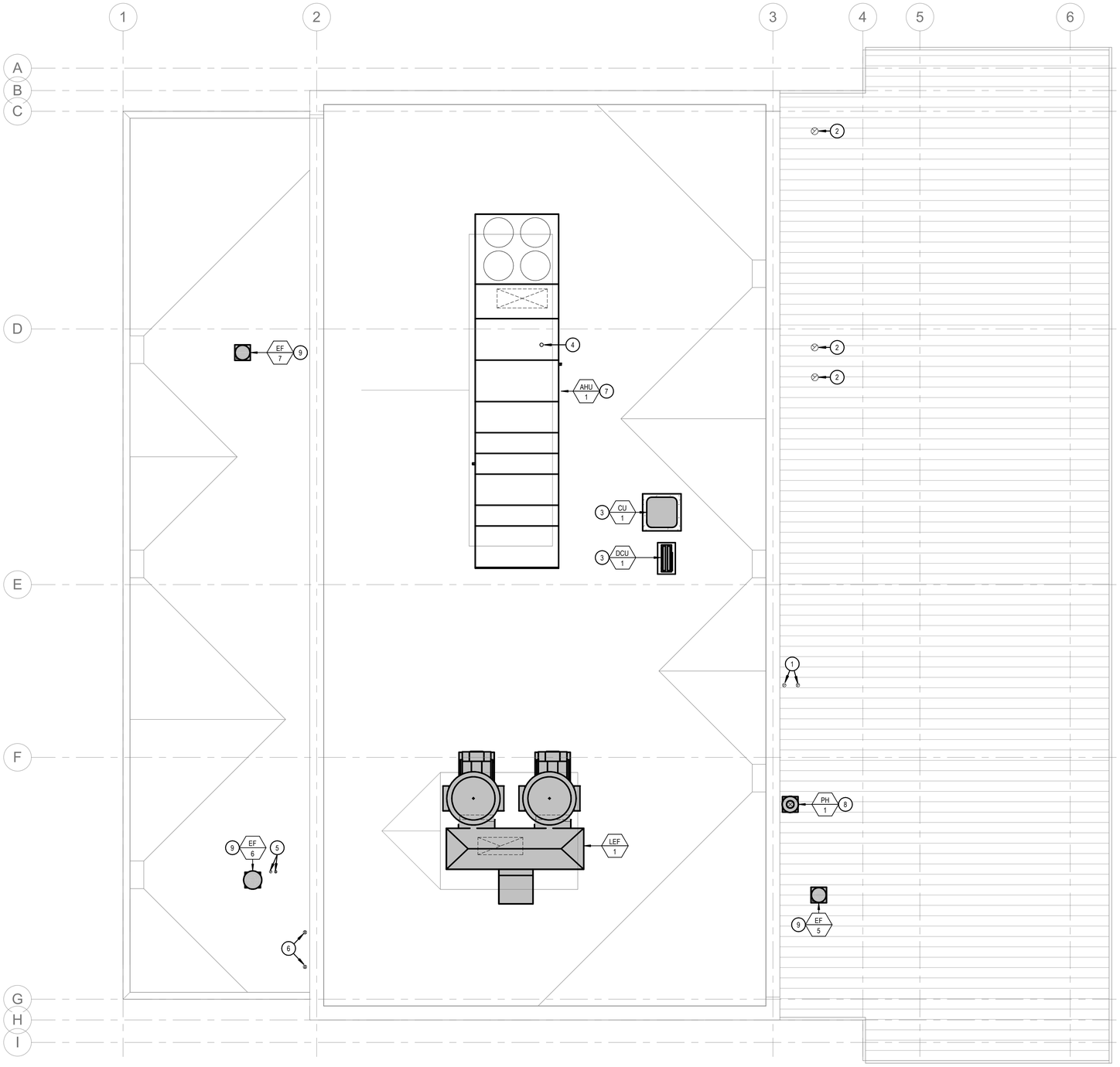

HVAC Roof Plan

3/16" = 1'-0"

MUSGROVE ENGINEERING, P.A.
234 S. Whisperwood Way
Boise, ID 83709
208.384.0585
645 West 25th Street
Idaho Falls, ID 83402
208.523.2862
www.musgrovepa.com

Project No. 23-239

KEYED NOTES:

(#) SYMBOL USED FOR CALLOUT

1. ROUTE CONCENTRIC VENT FROM FLOOR BELOW. SEAL ROOF PENETRATION.
2. ROUTE 8" ROUND FROM FLOOR BELOW AND TERMINATE WITH ROOF CAP.
3. INSTALL CONDENSING UNIT ON MIRO STAND PLATFORM PER DETAIL. ROUTE REFRIGERANT LINESET TO INDOOR FAN COIL UNIT. SEE DETAIL FOR REFRIGERANT PIPE ROUTING THROUGH ROOF.
4. ROUTE 3" STEAM LINE FROM FLOOR BELOW. SEE HYDRONIC FLOOR PLAN FOR CONTINUATION. CONNECT TO AIR HANDLING UNIT AS REQUIRED.
5. ROUTE 3" FLUE AND INTAKE VENT FROM FLOOR BELOW. SEE FLOOR PLAN FOR CONTINUATION. PROVIDE GOOSENECK TURNDOWN ON INTAKE PER MANUFACTURER INSTALLATION REQUIREMENTS.
6. ROUTE CONCENTRIC VENT FROM BOILER BELOW. PROVIDE WITH ROOF TERMINATION KIT. SEE FLOOR PLAN FOR CONTINUATION. PROVIDE GOOSENECK TURNDOWN ON INTAKE PER MANUFACTURER INSTALLATION REQUIREMENTS.
7. AIR HANDLING UNIT INSTALLED ON ROOF CURB. SEE ROOF CURB DETAIL FOR INSTALLATION REQUIREMENTS.
8. SEE PENTHOUSE MOUNTING DETAIL FOR INSTALLATION REQUIREMENTS.
9. SEE EXHAUST FAN FLAT ROOF MOUNTING DETAIL FOR INSTALLATION REQUIREMENTS.

PROFESSIONAL ENGINEER
LICENSED
16683
5/14/2024
STATE OF IDAHO
CHRISTOPHER DYKE

MILLER STAUFFER ARCHITECTS
601 E. FRONT AVE., STE 201
COEUR D' ALENE, IDAHO 83814
P 208.664.1773 F 208.667.3174
WWW.MILLERSTAUFFER.COM

MECHANICAL ROOF PLAN

BID SET

5/13/2024

D-1 Testing Laboratory
600 W Prairie Ave
Coeur d'Alene, ID 83814

LICENSED ARCHITECT
AR-984931
MICHEAL P. WALKER
STATE OF IDAHO

No.	Description	Date

PROJECT NUMBER 23239
PRINCIPAL Designer
PROJECT MANAGER Author

M2.0

5/14/2024 9:48:15 AM Autodesk Docs://ITD D-1 Laboratory/23239 ITD D1 Lab MEP_r23.rvt

MUSGROVE
ENGINEERING, P.A.
234 S. Whisperwood Way
Boise, ID 83709
208.384.0585
645 West 25th Street
Idaho Falls, ID 83402
208.523.2862
www.musgrovepa.com
Project No. 23-239

PROFESSIONAL ENGINEER
LICENSED
16683
5/14/2024
STATE OF IDAHO
CHRISTOPHER DYKE

HEATING WATER PIPING SCHEMATIC KEYED NOTES:

(#) SYMBOL USED FOR NOTE CALLOUT.

1. REFER TO THE BOILER PIPING DETAIL ON THE DETAIL SHEETS FOR INSTALLATION REQUIREMENTS.
2. REFER TO THE IN BOILER PIPING DETAIL ON THE DETAIL SHEETS FOR INLINE PUMP INSTALLATION REQUIREMENTS.
3. REFER TO THE POT FEEDER PIPING DETAIL ON THE DETAIL SHEETS FOR INSTALLATION REQUIREMENTS.
4. REFER TO THE SEDIMENT SEPARATOR PIPING DETAIL ON THE DETAIL SHEETS FOR INSTALLATION REQUIREMENTS.
5. REFER TO THE FLOOR MOUNTED BLADDER TYPE EXPANSION TANK PIPING DETAIL ON THE DETAIL SHEETS FOR INSTALLATION REQUIREMENTS.
6. BYPASS CONTROL VALVE.
7. REFER TO THE WATER METER PIPING DETAIL ON THE DETAIL SHEETS FOR INSTALLATION REQUIREMENTS.
8. REFER TO THE FLOW METER PIPING DETAIL ON THE DETAIL SHEETS FOR INSTALLATION REQUIREMENTS.

1. INSTALL ALL VALVES IN ACCESSIBLE LOCATIONS FOR MAINTENANCE PURPOSES.
2. INSTALL ALL GAUGES IN ACCESSIBLE LOCATIONS FOR MAINTENANCE/VIEWING PURPOSES.

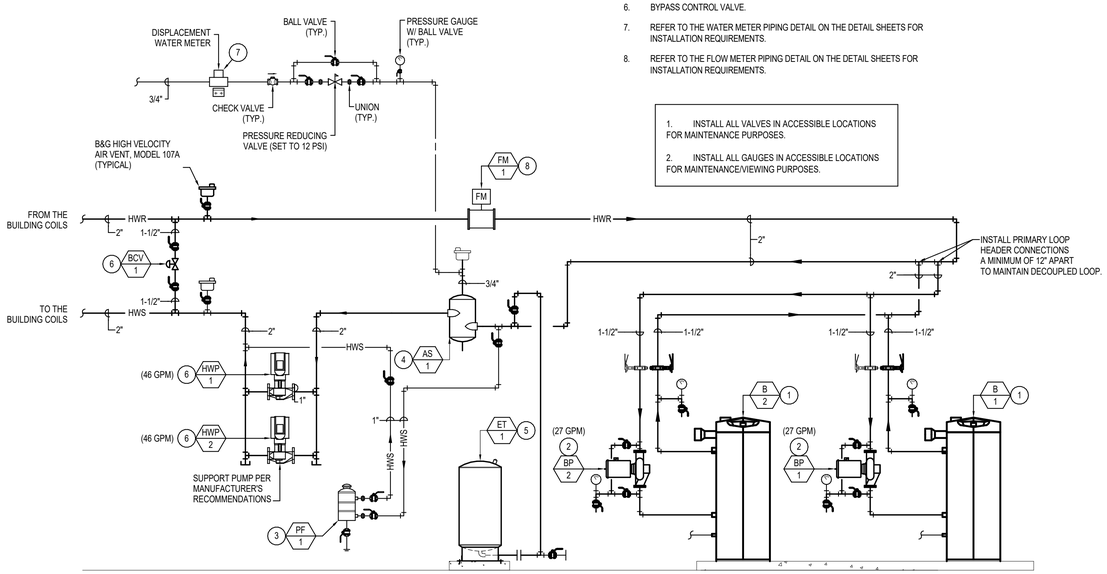

1 HEATING WATER PIPING SCHEMATIC
NTS

KEYED NOTES:

(#) SYMBOL USED FOR CALLOUT

1. EXTEND A FULL SIZE DUCT FROM THE ROOF-MOUNTED EXHAUST FAN THROUGH THE CEILING. TERMINATE THE DUCT WITH AN EXPANDED METAL SCREEN WITH A 1" FRAME. PAINT THE EXPANDED METAL AND ALL VISIBLE DUCTWORK THE SAME COLOR AS THE CEILING.
2. ROUTE HUMIDIFIER 3" INTAKE VENT AND FLUE UP TO ROOF ABOVE. SEE ROOF PLAN FOR CONTINUATION.
3. INSTALL LOUVER 9'-0" A.F.F.
4. MOUNT UNIT HEATER ON WALL 9'-0" A.F.F.
5. COMBINE FLUE AND INTAKE BOILER VENT WITH CONCENTRIC KIT AND ROUTE TO ROOF. SEE ROOF PLAN FOR CONTINUATION.
6. SEE FLOOR PLANS FOR CONTINUATION OF 3" STEAM LINE TO AIR HANDLING UNIT.
7. SEE FLOOR PLANS FOR CONTINUATION OF 2" HWS & HWR LINES.
8. INSTALL PIPE TEES A MAXIMUM OF 12" APART TO MAINTAIN DECOUPLED LOOP.
9. COORDINATE LOCATION OF DDC PANELS WITH DDC CONTRACTOR PRIOR TO INSTALLATION.
10. MOUNT PUMP ON BLOCK WALL. SEE PUMP PIPING DETAIL FOR ADDITIONAL REQUIREMENTS.
11. BOILER PUMP MOUNTED INLINE. SEE PIPING SCHEMATIC FOR ADDITINOAL REQUIREMENTS.

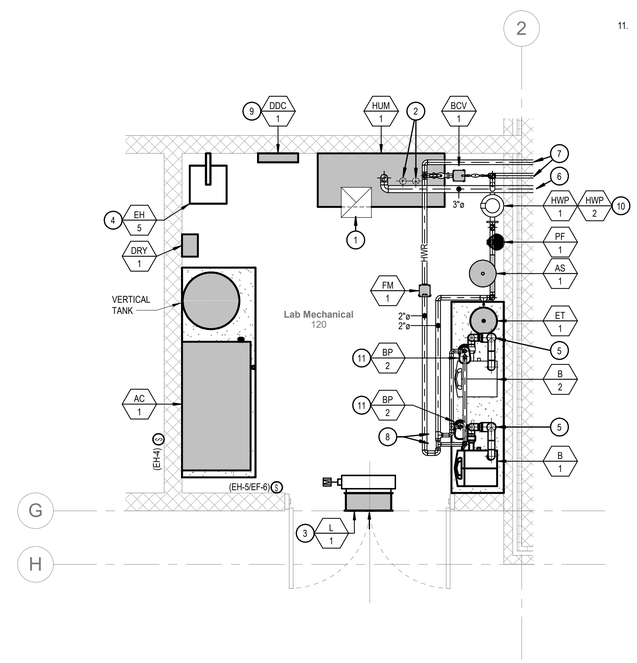

2 ENLARGED MECHANICAL PLAN
3/8" = 1'-0"

MILLER STAUFFER ARCHITECTS
601 E. FRONT AVE., STE 201
COEUR D' ALENE, IDAHO 83814
P 208.664.1773 F 208.667.3174
WWW.MILLERSTAUFFER.COM

ENLARGED MECHANICAL PLAN
BID SET
5/13/2024

D-1 Testing Laboratory
600 W Prairie Ave
Coeur d'Alene, ID 83814

LICENSED ARCHITECT
AR-984031
MICHEAL P. WALKER
STATE OF IDAHO

No.	Description	Date

PROJECT NUMBER 23239
PRINCIPAL Designer
PROJECT MANAGER Author

M3.0

5/14/2024 9:48:17 AM Autodesk Docs://ITD D-1 Laboratory/23239 ITD D1 Lab MEP_23.rvt

MUSGROVE ENGINEERING, P.A.
234 S. Whisperwood Way
Boise, ID 83709
208.384.0585
645 West 25th Street
Idaho Falls, ID 83402
208.523.2862
www.musgrovepa.com
Project No. 23-239

PROFESSIONAL ENGINEER LICENSED 16683 5/14/2024 STATE OF IDAHO CHRISTOPHER D. YKE

NOTES:
1. FOR TAKE-OFFS LARGER THAN 12" DIAMETER, USE A FACTORY MANUFACTURED DAMPER. LOUVERS & DAMPERS, INC. MODEL CD-600 WITH A LOCKING HAND QUADRANT OR EQUAL.
2. ROD CONTINUOUS ON 2" W.G. CLASS AND ON ALL DAMPERS OVER 12" DIAMETER.
3. BLADE 22 GAGE MIN., BUT NOT LESS THAN TWO GAGES MORE THAN THE DUCT GAGE.
4. PROVIDE REMOTE CEILING OPERATOR WHERE DAMPER IS INACCESSIBLE.
5. FOR DUCTS OVER 12" HIGH USE MULTIPLE BLADE DAMPERS (SEE FIG. C).
6. ALTERNATE MANUFACTURERS INCLUDE: AMERICAN WARMING, SAFE-AIR/DOWCO, J&J, LOUVERS & DAMPERS, RUSKIN, NAILOR, ARROW UNITED, POTTORFF, & CESCO.
7. PROVIDE STAND-OFF FOR DAMPER ARMS LOCATED W/EXTERNAL INSULATION.

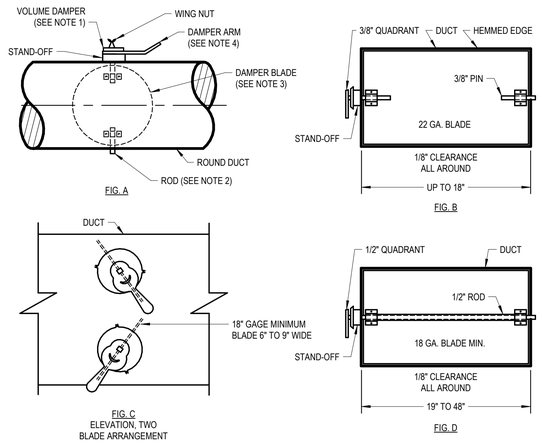

1 BALANCE DAMPER DETAIL
NTS

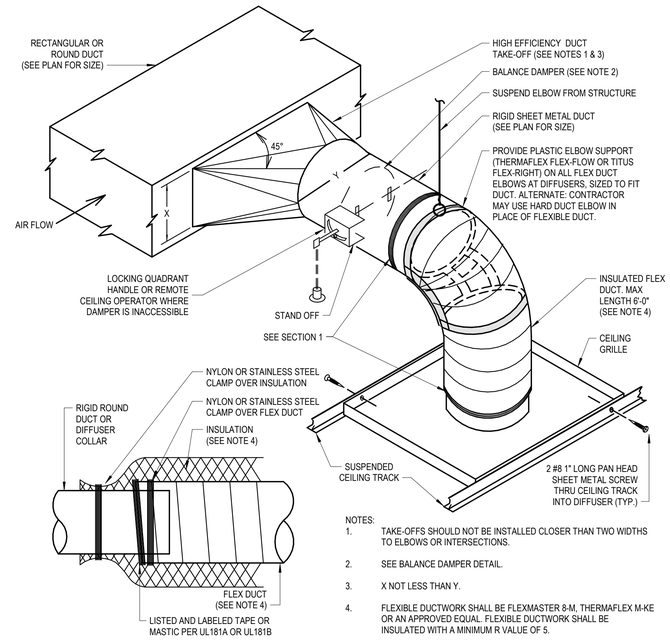

NOTES:
1. TAKE-OFFS SHOULD NOT BE INSTALLED CLOSER THAN TWO WIDTHS TO ELBOWS OR INTERSECTIONS.
2. SEE BALANCE DAMPER DETAIL.
3. X NOT LESS THAN Y.
4. FLEXIBLE DUCTWORK SHALL BE FLEXMASTER 8-M, THERMAFLEX M-KE OR AN APPROVED EQUAL. FLEXIBLE DUCTWORK SHALL BE INSULATED WITH A MINIMUM R VALUE OF 5.
5. RUN-OUT SHALL BE SAME SIZE AS COLLAR.
6. REFERENCE HVAC PLANS FOR REQUIRED BALANCE DAMPER LOCATIONS.

2 DUCT TAKEOFF DETAIL - HIGH EFFICIENT
NTS

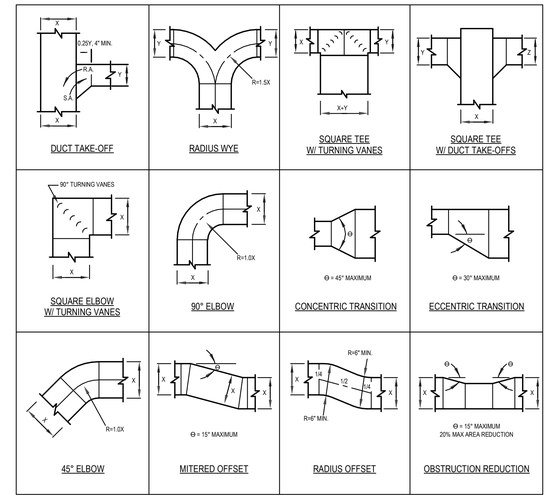

NOTE:
1. ALL DUCTWORK TRANSITIONS SHALL BE CONSTRUCTED AND INSTALLED TO SMACNA, SPECIFICATIONS AND THE ABOVE NOTED STANDARDS. ANY DEVIATIONS SHALL BE COORDINATED WITH THE ENGINEER.

3 RECTANGULAR DUCT FITTING DETAILS
NTS

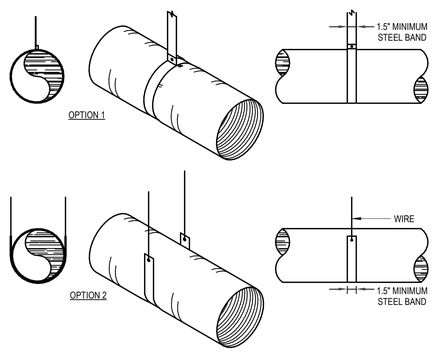

NOTES:
1. SUPPORT SYSTEM SHALL NOT DAMAGE, CRIMP, OR INHIBIT DUCT FREE AREA IN ANY WAY.
2. FLEXIBLE DUCT MUST NOT EXCEED 6'-0" FROM CONNECTION TO TERMINATION.
3. MAXIMUM LENGTH BETWEEN SUPPORTS MUST NOT EXCEED 3'-0" ON CENTER.
4. ATTACH BANDS OR WIRES TO SUPPORT STRUCTURE ABOVE.
5. FLEXIBLE DUCTWORK SHALL BE FLEXMASTER 1-M OR APPROVED EQUAL.
6. FLEXIBLE DUCTWORK SHALL BE INSULATED WITH A MINIMUM R-VALUE OF 6.0.
7. FLEXIBLE DUCTWORK IS FOR INDOOR USE ONLY. DO NOT INSTALL OR STORE PRODUCT WHERE EXPOSURE TO DIRECT SUNLIGHT CAN OCCUR. PROLONGED EXPOSURE TO SUNLIGHT MAY CAUSE DETERIORATION OF VAPOR BARRIER.
8. TERMINAL DEVICES SHALL BE SUPPORTED INDEPENDENTLY OF THE FLEXIBLE DUCTWORK.
9. REPAIR TURN OR DAMAGED VAPOR BARRIER/JACKET WITH DUCT TAPE LISTED AND LABELED TO UL 181B. IF INTERNAL CORE IS PENETRATED, REPLACE FLEXIBLE DUCTWORK.
10. AVOID BENDING DUCT ACROSS SHARP CORNERS OR INCIDENTAL CONTACT WITH METAL FIXTURES, PIPES, OR CONDUITS.
11. FLEXIBLE DUCTWORK SHALL NOT BE INSTALLED WITHIN 4 INCHES OF HOT EQUIPMENT (FURNACES, BOILERS, STEAM PIPES, ETC.) THAT IS ABOVE 250°F.
12. FLEXIBLE DUCTWORK SHALL NOT BE INSTALLED IN CONCRETE, BURIED BELOW GRADE, OR IN CONTACT WITH THE GROUND.
13. DO NOT INSTALL FLEXIBLE DUCTWORK IN EXPOSED CEILING AREA.

4 FLEXIBLE DUCT SUPPORT DETAIL
NTS

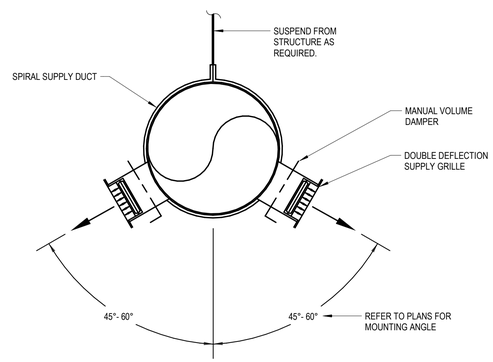

SPIRAL DUCT DETAIL
N.T.S.

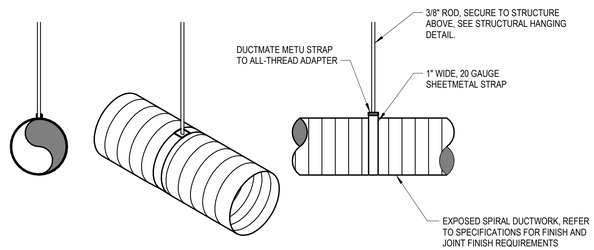

5 SPIRAL DUCT SUPPORT DETAIL (EXPOSED)
NTS

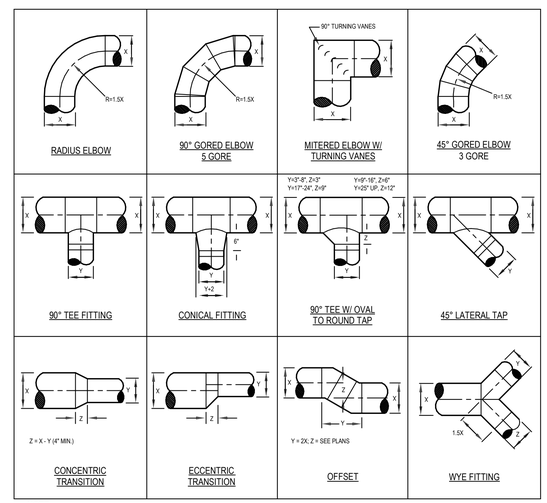

NOTE:
1. ALL DUCTWORK TRANSITIONS SHALL BE CONSTRUCTED AND INSTALLED TO SMACNA, SPECIFICATIONS, AND THE ABOVE NOTED STANDARDS. ANY DEVIATIONS SHALL BE COORDINATED WITH THE ENGINEER.

6 ROUND DUCT FITTING DETAILS
NTS

MILLER STAUFFER ARCHITECTS
601 E. FRONT AVE., STE 201
COEUR D' ALENE, IDAHO 83814
P 208.664.1773 F 208.667.3174
WWW.MILLERSTAUFFER.COM

MECHANICAL DETAILS
BID SET
5/13/2024

D-1 Testing Laboratory
600 W Prairie Ave
Coeur d'Alene, ID 83814

LICENSED ARCHITECT AR-984931 MICHEAL P. WALKER STATE OF IDAHO

No.	Description	Date

PROJECT NUMBER 23239
PRINCIPAL Designer
PROJECT MANAGER Author

M4.0

5/14/2024 9:48:18 AM Autodesk Docs://ITD D-1 Laboratory/23239 ITD D1 Lab MEP_r23.rvt

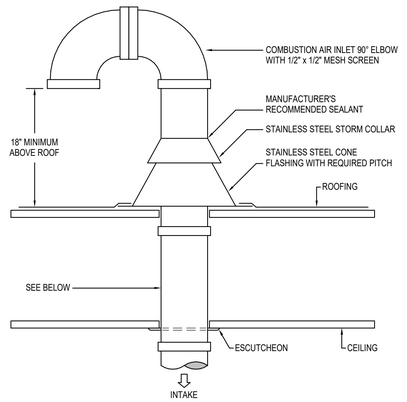

NOTES:

1. COMBUSTION AIR SHALL BE SCHEDULE 40 PVC PIPE. INSULATE W/ MINIMUM R-6 EXTERNAL INSULATION.

1 COMBUSTION AIR INTAKE DETAIL
NTS

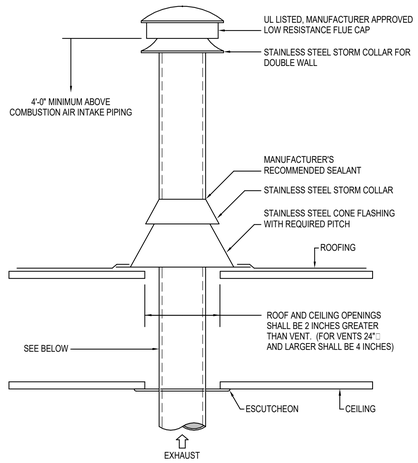

NOTES:

1. FLUE SHALL BE EQUAL TO METAL-FAB MODEL CG. DOUBLE WALL, 1" AIR INSULATED W/ AL29-4C STAINLESS STEEL INNER (CONDENSING VENT SYSTEM) AND 430 STEEL OUTER FLUE CASINGS.

2 FLUE DETAIL
NTS

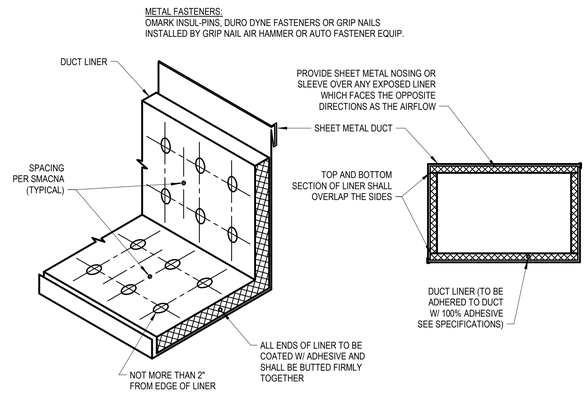

3 DUCT LINER DETAIL
NTS

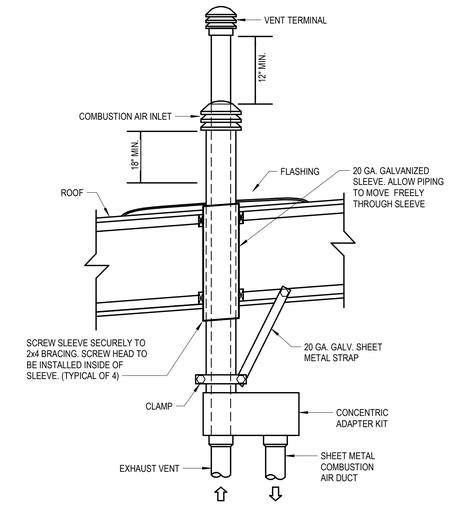

4 CONCENTRIC VENT DETAIL
NTS

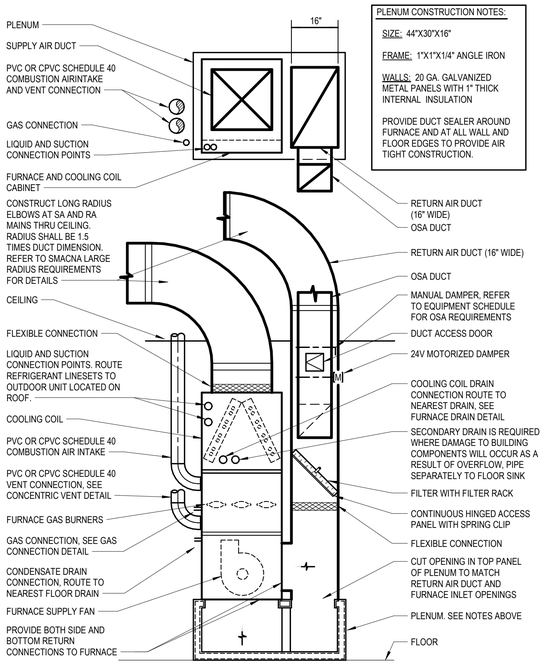

PLENUM CONSTRUCTION NOTES:

SIZE: 44"X30"X16"

FRAME: 1"X1"X1/4" ANGLE IRON

WALLS: 20 GA. GALVANIZED METAL PANELS WITH 1" THICK INTERNAL INSULATION

PROVIDE DUCT SEALER AROUND FURNACE AND AT ALL WALL AND FLOOR EDGES TO PROVIDE AIR TIGHT CONSTRUCTION.

5 FURNACE INSTALLATION DETAIL (90%)
NTS

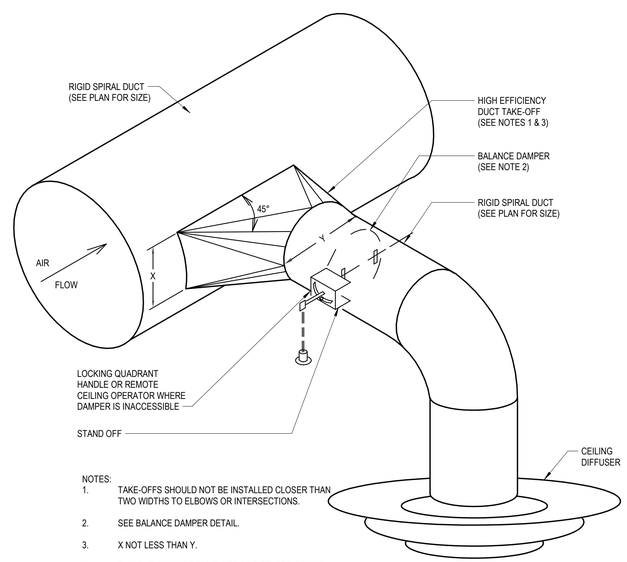

NOTES:

1. TAKE-OFFS SHOULD NOT BE INSTALLED CLOSER THAN TWO WIDTHS TO ELBOWS OR INTERSECTIONS.
2. SEE BALANCE DAMPER DETAIL.
3. X NOT LESS THAN Y.
4. RUN-OUT SHALL BE SAME SIZE AS DIFFUSER COLLAR.

6 DUCT TAKEOFF DETAIL - SPIRAL DUCT
NTS

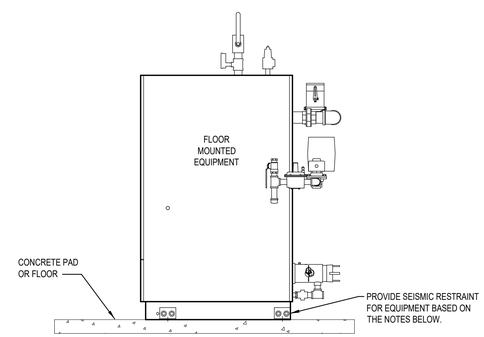

NOTES:

1. FLOOR MOUNTED EQUIPMENT WEIGHING 400 POUNDS OR LESS DOES NOT REQUIRE SEISMIC RESTRAINT.
2. FLOOR MOUNTED EQUIPMENT WEIGHING MORE THAN 400 POUNDS REQUIRES INDIVIDUALLY DESIGNED SEISMIC RESTRAINTS. RESTRAINTS SHALL BE ENGINEERED AND PROVIDED BY EQUIPMENT MANUFACTURER, MASON INDUSTRIES, OR APPROVED EQUAL. RESTRAINTS SHALL BE ENGINEERED PER THE CURRENT EDITION OF THE UNIFORM BUILDING CODE, FOR THE SEISMIC ZONE IN WHICH THE EQUIPMENT IS TO BE INSTALLED.
3. SEE EQUIPMENT SCHEDULE FOR ADDITIONAL REQUIREMENTS AND EQUIPMENT WEIGHTS.

7 SEISMIC RESTRAINT FOR FLOOR MOUNTED EQUIPMENT DETAIL
NTS

MUSGROVE ENGINEERING, P.A.
234 S. Whisperwood Way
Boise, ID 83709
208.384.0585
645 West 25th Street
Idaho Falls, ID 83402
208.523.2862
www.musgrovepa.com

Project No. 23-239

PROFESSIONAL ENGINEER LICENSED 16683 5/14/2024 STATE OF IDAHO CHRISTOPHER D. YKE

MILLER STAUFFER ARCHITECTS
601 E. FRONT AVE., STE 201
COEUR D' ALENE, IDAHO 83814
P 208.664.1773 F 208.667.3174
WWW.MILLERSTAUFFER.COM

MECHANICAL DETAILS

BID SET

5/13/2024

D-1 Testing Laboratory
600 W Prairie Ave
Coeur d'Alene, ID 83814

LICENSED ARCHITECT AR-984931 MICHEAL P. WALKER STATE OF IDAHO

No.	Description	Date

PROJECT NUMBER 23239
PRINCIPAL Designer
PROJECT MANAGER Author

M4.1

5/14/2024 9:48:18 AM Autodesk Docs://ITD D-1 Laboratory/23239 ITD D1 Lab MEP_r23.rvt

NOTES:

1. PIPING SHALL BE SUPPORTED INDEPENDENTLY FROM THE CONNECTIONS TO THE BOILER.
2. INSTALL ALL VALVES IN ACCESSIBLE LOCATIONS FOR MAINTENANCE PURPOSES.
3. INSTALL ALL GAUGES IN ACCESSIBLE LOCATIONS FOR MAINTENANCE / VIEWING PURPOSES.
4. ALL BUTTERFLY VALVES MOUNTED HIGHER THAN ABOVE 7'-0" A.F.F SHALL BE PROVIDED W/ A CHAIN WHEEL AND GUIDES.

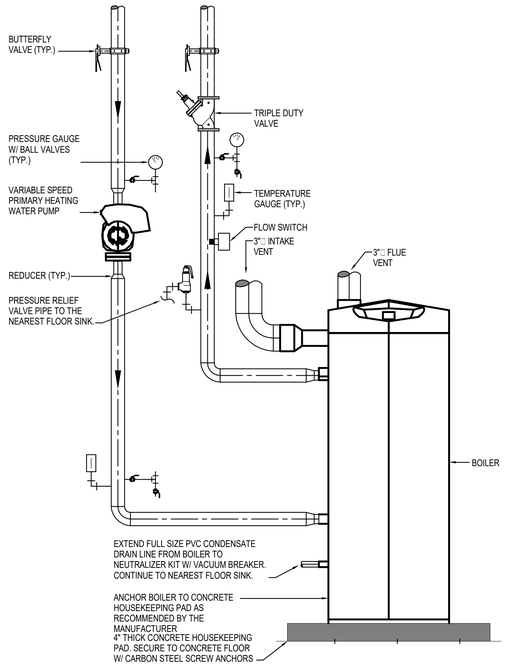

1 BOILER PIPING DETAIL
NTS

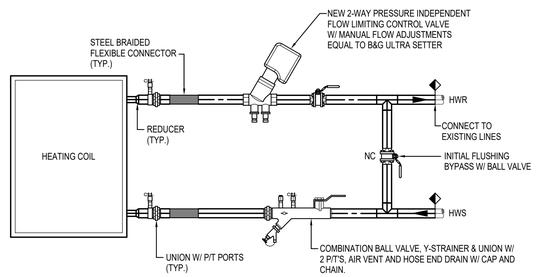

NOTES:
1. ALL COMPONENTS SHOWN SHALL BE EQUAL TO AUTOFLOW FLOW DESIGN, INC.
2. INSTALL ALL AIR VENTS, STRAINERS, CONTROL VALVES, BALL VALVES, ETC. IN ACCESSIBLE LOCATIONS FOR MAINTENANCE PURPOSES.

2 HEATING COIL PIPING DETAIL
NTS

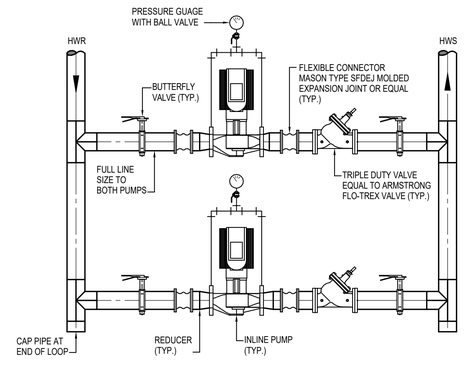

NOTES:

1. INSTALL ALL VALVES IN ACCESSIBLE LOCATIONS FOR MAINTENANCE PURPOSES.
2. INSTALL ALL GAUGES IN ACCESSIBLE LOCATIONS FOR MAINTENANCE / VIEWING PURPOSES.
3. ALL BUTTERFLY VALVES MOUNTED HIGHER THAN ABOVE 7'-0" A.F.F SHALL BE PROVIDED W/ A CHAIN WHEEL AND GUIDES.
4. PROVIDE FLANGED, UNION, OR GROOVED FITTING AT THE PUMP.
5. MOUNT THE PUMPS APPROXIMATELY 2'-6" AND 5'-0" ABOVE THE FINISHED FLOOR.

3 INLINE PUMP PIPING DETAIL
NTS

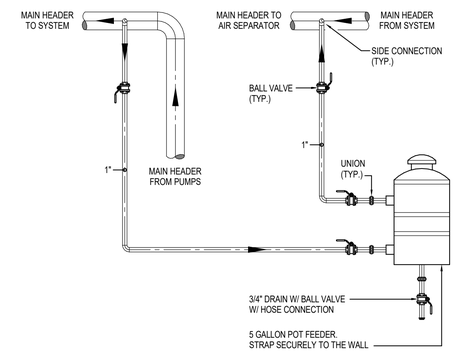

NOTE:
1. INSTALL ALL VALVES IN ACCESSIBLE LOCATIONS FOR MAINTENANCE PURPOSES.
2. INSTALL ALL GAUGES IN ACCESSIBLE LOCATIONS FOR VIEWING PURPOSES.

4 POT FEEDER PIPING DETAIL
NTS

WESSELS MODEL NO.	PIPE SIZE "A"
NLAP 40, 60	3/4"
NLAP 100, 150	1"
NLAP 220	1-1/2"

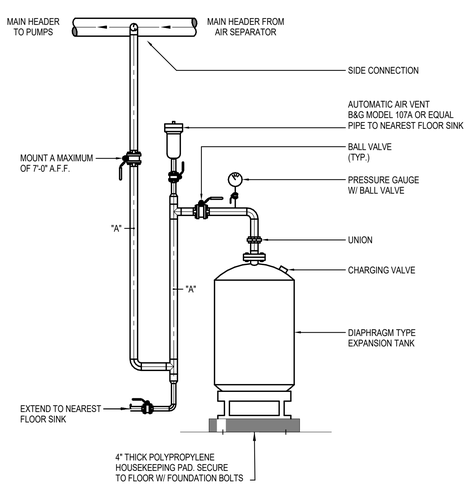

NOTES:

1. INSTALL ALL VALVES IN ACCESSIBLE LOCATIONS FOR MAINTENANCE PURPOSES.
2. INSTALL ALL GAUGES IN ACCESSIBLE LOCATIONS FOR VIEWING PURPOSES.

5 VERTICAL EXPANSION PIPING DETAIL
NTS

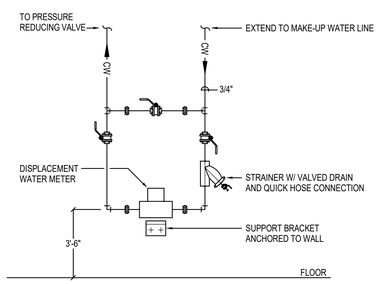

NOTES:

1. THE WATER METER SHALL BE A DISPLACEMENT TYPE, FULL SIZE NUTATING DISC, MAGNETIC DRIVE, SEALED REGISTER AND FULLY CONFORM TO AWWA C700. PEAK DOMESTIC FLOW SHALL BE 30 GPM.
2. THE WATER METER SHALL BE RATED FOR USE AT TEMPERATURES RANGING FROM -40 DEGREES F TO 158 DEGREES F AND OPERATE AT A WORKING PRESSURE OF 150 PSIG.
3. THE METER CASE, BOTTOM CAPS, AND REGISTER BOX LIDS SHALL BE CONSTRUCTED FROM CAST BRONZE.

6 WATER METER PIPING DETAIL
NTS

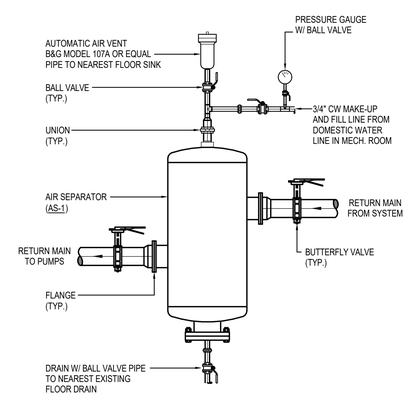

NOTES:

1. INSTALL ALL VALVES IN ACCESSIBLE LOCATIONS FOR MAINTENANCE PURPOSES.
2. INSTALL ALL GAUGES IN ACCESSIBLE LOCATIONS FOR MAINTENANCE / VIEWING PURPOSES.
3. ALL BUTTERFLY VALVES MOUNTED HIGHER THAN ABOVE 7'-0" A.F.F SHALL BE PROVIDED W/ A CHAIN WHEEL AND GUIDES.

7 AIR SEPARATOR DETAIL
NTS

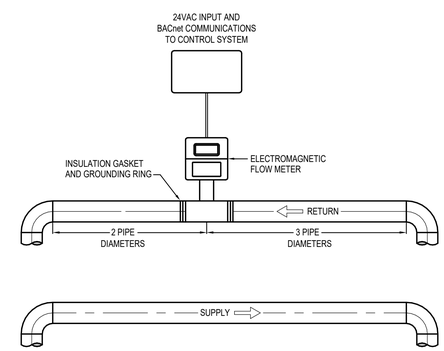

8 FLOW METER PIPING DETAIL
NTS

MUSGROVE ENGINEERING, P.A.
234 S. Whispenwood Way
Boise, ID 83709
208.384.0585
645 West 25th Street
Idaho Falls, ID 83402
208.523.2862
www.musgroveepa.com

Project No. 23-239

PROFESSIONAL ENGINEER LICENSED 16683 5/14/2024 STATE OF IDAHO CHRISTOPHER DYKE

MILLER STAUFFER ARCHITECTS
601 E. FRONT AVE., STE 201
COEUR D' ALENE, IDAHO 83814
P 208.664.1773 F 208.667.3174
WWW.MILLERSTAUFFER.COM

MECHANICAL DETAILS

BID SET
5/13/2024

D-1 Testing Laboratory
600 W Prairie Ave
Coeur d'Alene, ID 83814

LICENSED ARCHITECT AR-984931 MICHEAL P. WALKER STATE OF IDAHO

No.	Description	Date

PROJECT NUMBER 23239
PRINCIPAL Designer
PROJECT MANAGER Author

M4.2

5/14/2024 9:48:18 AM Autodesk Docs://ITD D-1 Laboratory/23239 ITD D1 Lab MEP_r23.rvt

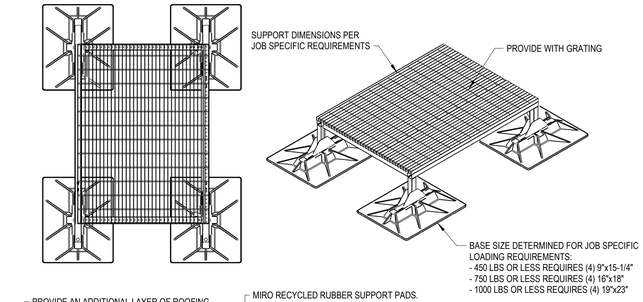

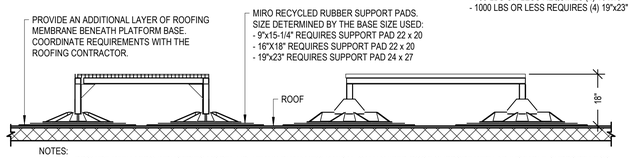

NOTES:

1. PROVIDE WITH MIRO INDUSTRIES MODEL HD, HEAVY DUTY MECHANICAL GALVANIZED ROOF SUPPORT WITH ADJUSTABLE SUPPORT LEGS.
2. SUPPORT SHALL EXTEND A MINIMUM OF 6" BEYOND EQUIPMENT IN EACH DIRECTION.
3. BOLT EQUIPMENT TO MECHANICAL SUPPORT, A MINIMUM OF (4) LOCATIONS.
4. APPROVED ALTERNATE MANUFACTURERS: UNISTRUT AND ROOF-PRO.
5. EQUIPMENT WEIGHTS UP TO 1000 LBS.

1 ROOFTOP CONDENSING UNIT PLATFORM DETAIL
NTS

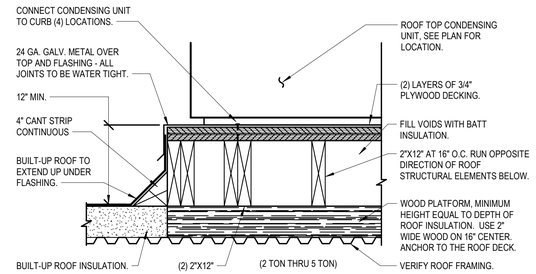

2 ROOFTOP CONDENSING UNIT PLATFORM DETAIL
NTS

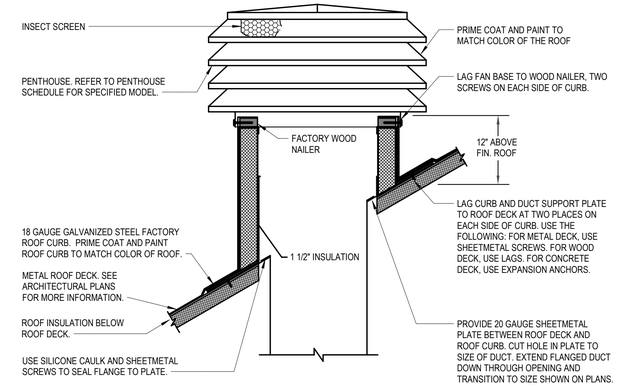

3 PENTHOUSE MOUNTING DETAIL
NTS

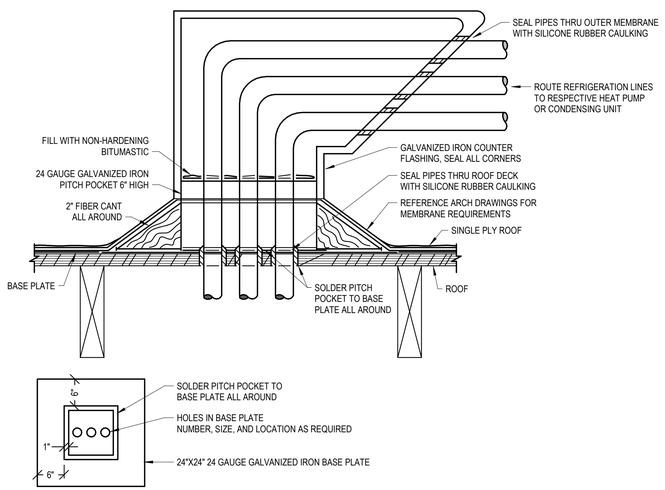

4 PIPING THROUGH ROOF DETAIL
NTS

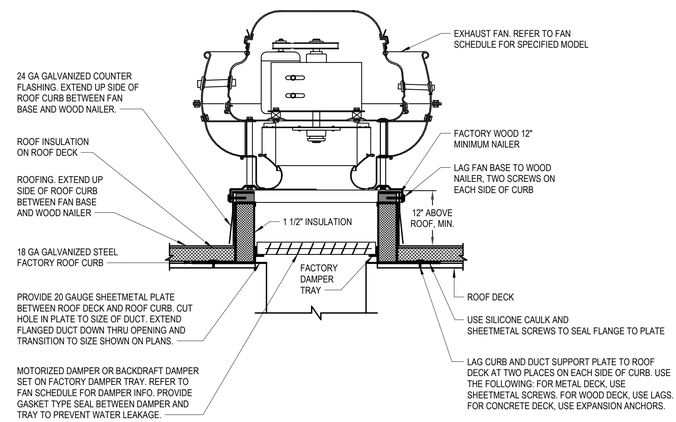

5 EXHAUST FAN MOUNTING DETAIL
NTS

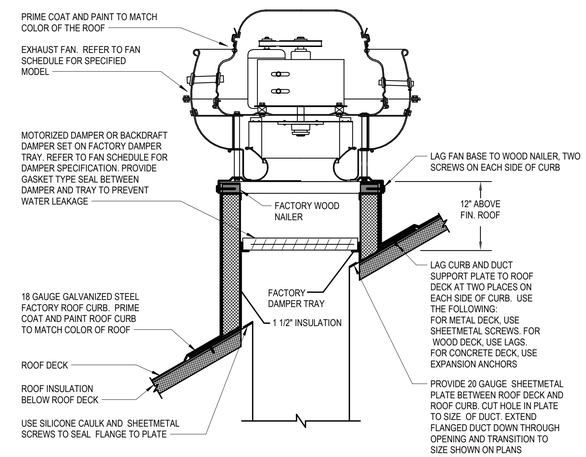

6 EXHAUST FAN MOUNTING DETAIL
NTS

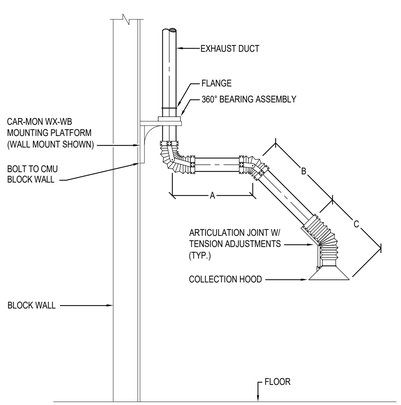

7 WALL MOUNTED SNORKEL INSTALLATION DETAIL
NTS

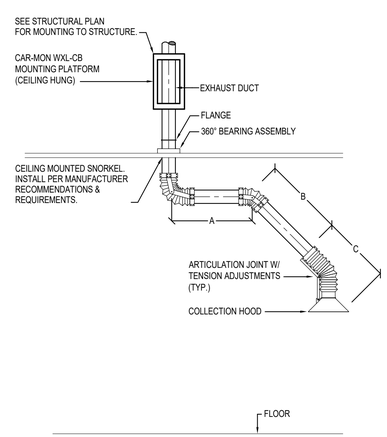

8 CEILING MOUNTED SNORKEL INSTALLATION DETAIL
NTS

MUSGROVE ENGINEERING, P.A.
234 S. Whispertwood Way
Boise, ID 83709
208.384.0585
645 West 25th Street
Idaho Falls, ID 83402
208.523.2862
www.musgroveepa.com

Project No. 23-239

PROFESSIONAL ENGINEER LICENSED 16683 5/14/2024 STATE OF IDAHO CHRISTOPHER D. YKE

MILLER STAUFFER ARCHITECTS
601 E. FRONT AVE., STE 201
COEUR D' ALENE, IDAHO 83814
P 208.664.1773 F 208.667.3174
WWW.MILLERSTAUFFER.COM

MECHANICAL DETAILS
BID SET
5/13/2024

D-1 Testing Laboratory
600 W Prairie Ave
Coeur d'Alene, ID 83814

LICENSED ARCHITECT AR-984931 MICHEAL P. WALKER STATE OF IDAHO

No.	Description	Date

PROJECT NUMBER 23239
PRINCIPAL Designer
PROJECT MANAGER Author

M4.3

5/14/2024 9:48:19 AM Autodesk Docs://ITD D-1 Laboratory/23239 ITD D1 Lab MEP_r23.rvt

CANOPY HOOD SCHEDULE

SYMBOL	LOCATION	SERVES	EXHAUST MATERIAL	EQUIPMENT DIMENSIONS			EXHAUST AIRFLOW (CFM)	CAPTURE VELOCITY (FPM)	ACGIH RECOMMENDED CAPTURE VELOCITY (FPM)	EXHAUST OUTLET SIZE	MINIMUM DUCT VELOCITY (FPM)	RECTANGULAR CANOPY HOOD		LOCATION OF HOOD ABOVE OPERATING EQUIPMENT	MANUFACTURER AND MODEL	REMARKS
				WIDTH	DEPTH	HEIGHT						WIDTH	DEPTH	HEIGHT		
CH-1	RESIDENCY LAB 131	(2) NCAT OVENS	VAPORS/HEAT	25-3/4"	25-3/4"	36-3/4"	1,800	100	50-500	(3) 8"	1,800	198"	24"	12"	CAR-MON CUSTOM MODEL	1 , 2
		(2) GRIEVE OVENS	VAPORS/HEAT	45"	28"	66"										
CH-2	GENERAL LAB 125	ROTARY EVAPORATOR	VAPORS	30"	20"	36"	1,425	100	50-500	(3) 8"	1,800	120"	30"	18"	CAR-MON CUSTOM MODEL	1 , 2
		INFRATEST EXTRACTOR	VAPORS	45"	29"	59"										
CH-3	ASPHALT LAB 124	(2) NCAT OVEN	VAPORS/HEAT	25-3/4"	25-3/4"	36-3/4"	1,800	100	50-500	(3) 8"	1,800	198"	24"	12"	CAR-MON CUSTOM MODEL	1 , 2
		(2) GRIEVE BENCH OVEN	VAPORS/HEAT	45"	28"	66"										
CH-4	ASPHALT LAB 117	(2) NCAT OVEN	VAPORS/HEAT	25-3/4"	25-3/4"	36-3/4"	1,800	100	50-500	(3) 8"	1,800	198"	24"	12"	CAR-MON CUSTOM MODEL	1 , 2
		(2) GRIEVE BENCH OVEN	VAPORS/HEAT	45"	28"	66"										

REMARKS:

1. APPROVED ALTERNATE MANUFACTURERS: KEES, MONOXIVENT, NEDERMAN, & VENTAIRE.
2. PROVIDE WITH PILOT LIGHT SWITCH.

SNORKEL HOOD SCHEDULE

SYMBOL	LOCATION	EXHAUST VALVE	EXHAUST MATERIAL	EXHAUST DUCT SIZE	EXHAUST AIRFLOW (CFM)		MIN. EXHAUST DUCT VELOCITY (FPM)	SNORKEL EXTRACTION ARM DIMENSIONS			PRESSURE DROP (INCHES W.C.)	MOUNTING PLATFORM		OPERATING WEIGHT (LBS)	MANUFACTURER AND MODEL	REMARKS
					MIN.	MAX.		"A"	"B"	"C"		WALL	CEILING			
SN-1	RESIDENCY LAB 131	SEV-1	DUST / HEAT	8"	0	700	2,000	53"	52"	12"	1.10"		X	120	CARMON MODEL WXS-100	1 , 2 , 3 , 4 , 5 , 6
SN-2	RESIDENCY NOISE ROOM 130	SEV-2	DUST / HEAT	8"	115	700	2,000	35"	34"	12"	1.10"	X		100	CARMON MODEL WXS-070	1 , 2 , 3 , 4 , 5 , 6
SN-3	ASPHALT LAB 124	SEV-3	DUST / HEAT	8"	400	700	2,000	53"	52"	12"	1.10"		X	120	CARMON MODEL WXS-100	1 , 2 , 3 , 4 , 5 , 6
SN-4	MATERIAL LAB 118	SEV-4	DUST / HEAT	8"	285	700	2,000	53"	52"	12"	1.10"	X		120	CARMON MODEL WXS-100	1 , 2 , 3 , 4 , 5 , 6
SN-5	ASPHALT LAB 117	SEV-5	DUST / HEAT	8"	400	700	2,000	53"	52"	12"	1.10"		X	120	CAR-MON MODEL WXS-100	1 , 2 , 3 , 4 , 5 , 6

REMARKS:

1. APPROVED ALTERNATE MANUFACTURERS: MONOXIVENT & VENTAIRE.
2. PROVIDE WITH WALL MOUNT (CAR-MON MODEL WX-WB) OR CEILING HANGING MOUNT (CAR-MON MODEL WX-WB & WX-CB) AS INDICATED.
3. ALL COMPONENTS SHALL BE KEPT OUT OF THE AIRSTREAM FOR A SMOOTH AND EVEN FLOW.
4. PROVIDE WITH MANUFACTURER'S INTEGRAL BOLT-UP FLANGE MOUNTING W/ 360° SYNTHETIC LUBRISTIC BEARING ASSEMBLY, ALUMINUM CONSTRUCTION W/ TENSIONING ADJUSTMENTS AT ARTICULATION JOINTS, OMNI-DIRECTIONAL POSITIONING FLEX SECTION W/ COLLECTION HOOD.
5. PROVIDE WITH PILOT LIGHT WALL SWITCH.
6. SEE SNORKEL HOOD DETAILS FOR DIMENSIONS.

PUMP SCHEDULE

SYMBOL	AREA SERVED	TYPE	CAPACITY			MOTOR			SUCTION DIFFUSER	TRIPLE DUTY VALVE	OPERATING WEIGHT (LBS)	MANUFACTURER AND MODEL	REMARKS
			FLOW (GPM)	HEAD (FT)	MIN EFF	HP	RPM	V/Ø					
BP-1	BOILER PUMP (B-1)	INLINE	27.0	15.0	72.3%	0.5	1,750	115/1	N/A	N/A	50	GRUNDFOS MAGNA 3	1 , 2 , 4
BP-2	BOILER PUMP (B-2)	INLINE	27.0	15.0	72.3%	0.5	1,750	115/1	N/A	N/A	50	GRUNDFOS MAGNA 3	1 , 2 , 4
HWP-1	HOT WATER LOOP	INLINE VARIABLE PRIMARY	46	40	64%	1.0	3,768	208/3	N/A	FTV-2TS	50	ARMSTRONG 4380	1 , 2 , 3 , 4
HWP-2	HOT WATER LOOP	INLINE VARIABLE PRIMARY	46	40	64%	1.0	3,768	208/3	N/A	FTV-2TS	50	ARMSTRONG 4380	1 , 2 , 3 , 4

REMARKS:

1. APPROVED ALTERNATE MANUFACTURERS: B&G, GRUNDFOS, TACO, PACO, & PATTERSON.
2. PROVIDE UNIT WITH PREMIUM EFFICIENCY MOTOR.
3. PROVIDE WITH INTEGRAL VARIABLE SPEED DRIVE.
4. CAPACITY BASED ON 100% WATER.

PRESSURE INDEPENDENT SNORKEL EXHAUST VALVE SCHEDULE

SYMBOL	AREA SERVED	TYPE	VALVE OUTLET		MINIMUM DUCT VELOCITY (FPM)	VALVE AIRFLOWS		VALVE AIRFLOW RANGE		PRESSURE DROP (IN. W.C.)		INSTALLED POSITION	MANUFACTURER AND MODEL	REMARKS
			QUANTITY	SIZE		MIN. (CFM)	MAX (CFM)	MIN. (CFM)	MAX (CFM)	MIN.	MAX.			
SEV-1	RESIDENCY LAB 131	VARIABLE VOLUME ELECTRONIC EXHAUST VALVE	1	10"	2,500	0	700	50	1,000	0.6"	3.0"	HORIZONTAL	PHOENIX MEDIUM PRESSURE BSVA110	1 , 2 , 3
SEV-2	RESIDENCY NOISE ROOM 130	VARIABLE VOLUME ELECTRONIC EXHAUST VALVE	1	10"	2,500	120	700	50	1,000	0.6"	3.0"	HORIZONTAL	PHOENIX MEDIUM PRESSURE BSVA110	1 , 2 , 3
SEV-3	ASPHALT LAB 124	VARIABLE VOLUME ELECTRONIC EXHAUST VALVE	1	10"	2,500	0	700	50	1,000	0.6"	3.0"	HORIZONTAL	PHOENIX MEDIUM PRESSURE BSVA110	1 , 2 , 3
SEV-4	MATERIAL LAB 118	VARIABLE VOLUME ELECTRONIC EXHAUST VALVE	1	10"	2,500	280	810	50	1,000	0.6"	3.0"	HORIZONTAL	PHOENIX MEDIUM PRESSURE BSVA110	1 , 2 , 3
SEV-5	ASPHALT LAB 117	VARIABLE VOLUME ELECTRONIC EXHAUST VALVE	1	10"	2,500	0	700	50	1,000	0.6"	3.0"	HORIZONTAL	PHOENIX MEDIUM PRESSURE BSVA110	1 , 2 , 3

REMARKS:

1. ALTERNATE MANUFACTURERS: CRC & TRIATEK.
2. PROVIDE W/ MANUFACTURER'S CLOSED CELL FOAM EXTERIOR INSULATION, COATED VALVE, DRAWBAND CLAMPS FOR INLET AND OULET CONNECTIONS, ON/OFF SWITCH, 24 VOLT POWER WITH LESS THAN 1 SECOND CONTROL TYPE, VAV CONTROLLER, ALUMINUM BODY, 316 STAINLESS STEEL SHAFT.
3. SEE CONTROL DRAWINGS FOR SEQUENCE OF OPERATION.

PRESSURE INDEPENDENT ROOM SUPPLY VALVE SCHEDULE

SYMBOL	AREA SERVED	TYPE	VALVE INLET		MINIMUM DUCT VELOCITY (FPM)	VALVE AIRFLOWS				VALVE AIRFLOW RANGE		PRESSURE DROP (IN. W.C.)		INSTALLED POSITION	MANUFACTURER AND MODEL	REMARKS
			QUANTITY	SIZE		MIN. (CFM)		COOLING MODE	MAX (CFM)	MIN. (CFM)	MAX (CFM)	MIN.	MAX.			
						UNOCC.	OCC.									
SAV-1	RESIDENCY LAB 131	VARIABLE VOLUME ELECTRONIC EXHAUST VALVE	1	24"X12"	2,500	530	720	1,525	2,250	180	3,000	0.6"	3.0"	HORIZONTAL	PHOENIX MEDIUM PRESSURE BSVA212M	1 , 2 , 3
SAV-2	SOIL/AGGREGATE 126	VARIABLE VOLUME ELECTRONIC EXHAUST VALVE	1	8"	2,500	220	300	560	560	35	700	0.6"	3.0"	HORIZONTAL	PHOENIX MEDIUM PRESSURE BSVA108M	1 , 2 , 3
SAV-3	ASPHALT LAB 124	VARIABLE VOLUME ELECTRONIC EXHAUST VALVE	1	24"X12"	2,500	270	410	700	2,260	180	3,000	0.6"	3.0"	HORIZONTAL	PHOENIX MEDIUM PRESSURE BSVA212M	1 , 2 , 3
SAV-4	D-1 LAB 123	VARIABLE VOLUME ELECTRONIC EXHAUST VALVE	1	20"X10"	2,500	725	980	700	1,500	100	2,000	0.6"	3.0"	HORIZONTAL	PHOENIX MEDIUM PRESSURE BSVA210M	1 , 2 , 3
SAV-5	CONCRETE 119	VARIABLE VOLUME ELECTRONIC EXHAUST VALVE	1	8"	2,500	190	255	585	585	35	700	0.6"	3.0"	HORIZONTAL	PHOENIX MEDIUM PRESSURE BSVA108M	1 , 2 , 3
SAV-6	MATERIAL LAB 118	VARIABLE VOLUME ELECTRONIC EXHAUST VALVE	1	8"	2,500	190	285	725	725	35	700	0.6"	3.0"	HORIZONTAL	PHOENIX MEDIUM PRESSURE BSVA108M	1 , 2 , 3
SAV-7	ASPHALT LAB 117	VARIABLE VOLUME ELECTRONIC EXHAUST VALVE	1	24"X12"	2,500	270	405	850	2,260	180	3,000	0.6"	3.0"	HORIZONTAL	PHOENIX MEDIUM PRESSURE BSVA212M	1 , 2 , 3
SAV-8	RESIDENCY NOISE ROOM 130	VARIABLE VOLUME ELECTRONIC EXHAUST VALVE	1	8"	2,500	75	115	250	630	35	700	0.6"	3.0"	HORIZONTAL	PHOENIX MEDIUM PRESSURE BSVA108M	1 , 2 , 3
SAV-9	GENERAL LAB 125	VARIABLE VOLUME ELECTRONIC EXHAUST VALVE	1	12"	2,500	160	240	275	1,290	90	1,500	0.6"	3.0"	HORIZONTAL	PHOENIX MEDIUM PRESSURE BSVA112M	1 , 2 , 3

REMARKS:

1. ALTERNATE MANUFACTURERS: CRC & TRIATEK.
2. PROVIDE W/ MANUFACTURER'S CLOSED CELL FOAM EXTERIOR INSULATION, COATED VALVE, DRAWBAND CLAMPS FOR INLET AND OULET CONNECTIONS, ON/OFF SWITCH, 24 VOLT POWER WITH LESS THAN 1 SECOND CONTROL TYPE, VAV CONTROLLER, ALUMINUM BODY, 316 STAINLESS STEEL SHAFT.
3. SEE CONTROL DRAWINGS FOR SEQUENCE OF OPERATION.

PRESSURE INDEPENDENT GENERAL EXHAUST VALVE SCHEDULE

SYMBOL	AREA SERVED	TYPE	VALVE OUTLET		MINIMUM DUCT VELOCITY (FPM)	VALVE AIRFLOWS		VALVE AIRFLOW RANGE		PRESSURE DROP (IN. W.C.)		INSTALLED POSITION	MANUFACTURER AND MODEL	REMARKS
			QUANTITY	SIZE		MIN. (CFM)	MAX (CFM)	MIN. (CFM)	MAX (CFM)	MIN.	MAX.			
GEV-1	RESIDENCY LAB 131	VARIABLE VOLUME ELECTRONIC EXHAUST VALVE	2	10"	2,500	0	1,700	100	2,000	0.6"	3.0"	HORIZONTAL	PHOENIX MEDIUM PRESSURE BSVA210	
GEV-2	GENERAL LAB 125	VARIABLE VOLUME ELECTRONIC EXHAUST VALVE	1	8"	2,500	0	240	35	700	0.6"	3.0"	HORIZONTAL	PHOENIX MEDIUM PRESSURE BSVA108	1 , 2 , 3
GEV-3	ASPHALT LAB 124	VARIABLE VOLUME ELECTRONIC EXHAUST VALVE	1	10"	2,500	405	780	50	1,000	0.6"	3.0"	HORIZONTAL	PHOENIX MEDIUM PRESSURE BSVA110	1 , 2 , 3
GEV-4	D-1 LAB 123	VARIABLE VOLUME ELECTRONIC EXHAUST VALVE	1	10"	2,500	710	710	50	1,000	0.6"	3.0"	HORIZONTAL	PHOENIX MEDIUM PRESSURE BSVA110	1 , 2 , 3
GEV-5	ASPHALT LAB 117	VARIABLE VOLUME ELECTRONIC EXHAUST VALVE	1	10"	2,500	405	950	50	1,000	0.6"	3.0"	HORIZONTAL	PHOENIX MEDIUM PRESSURE BSVA110	1 , 2 , 3
GEV-6	CONCRETE 119	VARIABLE VOLUME ELECTRONIC EXHAUST VALVE	1	10"	2,500	280	650	50	1,000	0.6"	3.0"	HORIZONTAL	PHOENIX MEDIUM PRESSURE BSVA110	1 , 2 , 3
GEV-7	SOIL/AGGREGATE 126	VARIABLE VOLUME ELECTRONIC EXHAUST VALVE	1	8"	2,500	330	625	35	700	0.6"	3.0"	HORIZONTAL	PHOENIX MEDIUM PRESSURE BSVA108	1 , 2 , 3

REMARKS:

1. ALTERNATE MANUFACTURERS: CRC & TRIATEK.
2. PROVIDE W/ MANUFACTURER'S CLOSED CELL FOAM EXTERIOR INSULATION, COATED VALVE, DRAWBAND CLAMPS FOR INLET AND OULET CONNECTIONS, ON/OFF SWITCH, 24 VOLT POWER WITH LESS THAN 1 SECOND CONTROL TYPE, VAV CONTROLLER, ALUMINUM BODY, 316 STAINLESS STEEL SHAFT.
3. SEE CONTROL DRAWINGS FOR SEQUENCE OF OPERATION.

EXHAUST FAN SCHEDULE

SYMBOL	AREA SERVED	UNIT TYPE	BLOWER				ELECTRICAL		MAXIMUM SONES	OPERATING WEIGHT (LBS)	MANUFACTURER AND MODEL	REMARKS
			CFM	ESP	MAXIMUM RPM	DRIVE	HP/W	V/Ø				
EF-1	RESTROOM 102	CEILING CABINET	100	0.375	1,075	DIRECT	46.5 W	115/1	2.5	15	COOK MODEL GC-148	1 , 2 , 4
EF-2	RESTROOM 103	CEILING CABINET	100	0.375	1,075	DIRECT	46.5 W	115/1	2.5	15	COOK MODEL GC-148	1 , 2 , 4
EF-3	JANITOR 105	CEILING CABINET	100	0.375	1,075	DIRECT	46.5 W	115/1	2.5	15	COOK MODEL GC-148	1 , 2 , 4
EF-4	ELECTRICAL 116	ROOF	125	0.25	1,550	DIRECT	75.9 W	115/1	5.5	25	COOK MODEL 70R15DH	1 , 3 , 4
EF-5	LAB MECHANICAL 120	CEILING CABINET	250	0.25	1,550	DIRECT	66.9 W	115/1	3.7	30	COOK MODEL 90R15DH	1 , 3 , 4
EF-6	NUCLEAR GAUGE STORAGE 128	CEILING CABINET	125	0.25	1,550	DIRECT	75.9 W	115/1	5.5	25	COOK MODEL 70R15DH	1 , 3 , 4

REMARKS:

1. APPROVED ALTERNATE MANUFACTURERS: ACME, GREENHECK, PENNBARRY, TWIN CITY FAN COMPANY, & SOLER & PALAU.
2. PROVIDE UNIT WITH MANUFACTURER'S ALUMINUM ROOF CAP (FLAT ROOF) EQUAL TO COOK MODEL PR (W/ INTEGRAL BIRD SCREEN AND ROOF CURB), BACKDRAFT DAMPER, OUTLET FLEX DUCT CONNECTION, STANDARD PLUG DISCONNECT, PRE-WIRED FAN SPEED CONTROLLER, THERMAL OVERLOAD PROTECTION, HANGING VIBRATION ISOLATORS, AND WHITE ALUMINUM GRILLE.
3. PROVIDE UNIT WITH MANUFACTURER'S ROOF CURB W/ DAMPER TRAY AND BACKDRAFT DAMPER, THERMAL OVERLOAD PROTECTION, PRE-WIRED NEMA 3R ELECTRICAL DISCONNECT SWITCH, AND INTEGRAL BIRD SCREEN
4. SEE CONTROL DRAWINGS FOR SEQUENCE OF OPERATION.

PROFESSIONAL ENGINEER LICENSED 16683 5/14/2024 STATE OF IDAHO CHRISTOPHER DIKS

MUSGROVE ENGINEERING, P.A.
234 S. Whisperwood Way
Boise, ID 83709
208.384.0585
645 West 25th Street
Idaho Falls, ID 83402
208.523.2862
www.musgroveepa.com

Project No. 23-239

MILLER STAUFFER ARCHITECTS
601 E. FRONT AVE., STE 201
COEUR D' ALENE, IDAHO 83814
P 208.664.1773 F 208.667.3174
WWW.MILLERSTAUFFER.COM

MECHANICAL SCHEDULES

BID SET
5/13/2024

D-1 Testing Laboratory
600 W Prairie Ave
Coeur d'Alene, ID 83814

LICENSED ARCHITECT AR-984031 MICHEAL P. WALKER STATE OF IDAHO

No.	Description	Date

PROJECT NUMBER 23239
PRINCIPAL Designer
PROJECT MANAGER Author

M5.0

5/14/2024 9:48:20 AM Autodesk Docs://ITD D-1 Laboratory/23239 ITD D1 Lab MEP_r23.rvt

CONDENSING HOT WATER BOILER SCHEDULE

SYMBOL	AREA SERVED	THERMAL EFFICIENCY	FUEL	EWT (°F)	LWT (°F)	BOILER FLOW (GPM)	MAX P.D. (FT H_2O)	CAPACITY		MANUFACTURER AND MODEL	REMARKS
								INPUT MBH	OUTPUT MBH		
B-1	HOT WATER LOOP	95%	NATURAL GAS	120.0	140.0	27.0	5.0	285	265	LOCHINVAR KHB285N	1 , 2 , 3 , 4
B-2	HOT WATER LOOP	95%	NATURAL GAS	120.0	140.0	27.0	5.0	285	265	LOCHINVAR KHB285N	1 , 2 , 3 , 4

REMARKS:

1. APPROVED ALTERNATE MANUFACTURERS: FULTON ENDURA, CLEAVER BROOKS CLEARFIRE, AERCO BENCHMARK.
2. PROVIDE BOILER VENTING KIT, BACnet INTERFACE, NEUTRALIZING KIT, COMBUSTION AIR INTAKE KIT, LOW WATER CUT-OFF, FLOW SWITCH, MODULATING GAS BURNER, CONDENSATE TRAP, 316L STAINLESS STEEL COMBUSTION CHAMBER, EXHAUST PIPE, CSD-1 AND OSA RESET, AND CONTROL WITH 10:1 TURNDOWN.
3. BOILER SHALL BE PROVIDED W/FACTORY START-UP, START-UP IS NOT COMPLETE UNTIL ALL BURNERS AND BLOWER ARE CALIBRATED FOR PEAK PERFORMANCE AND AT COMPLETION OF PROJECT ALL BURNERS, BLOWERS, HEAT EXCHANGERS, AND OTHER INTERNAL PARTS SHALL BE THOROUGHLY CLEANED OF CONSTRUCTION DEBRIS.
4. SEE CONTROLS DRAWINGS FOR SEQUENCE OF OPERATION.
5. CAPACITY BASED ON 100% WATER.

HOT WATER REHEAT COIL SCHEDULE

SYMBOL	AREA / SUPPLY VALVE SERVED	CAPACITY (MBH)	CFM	E.A.T. (°F)	L.A.T. (°F)	AIR P.D. (IN W.C.)	FLUID PERFORMANCE			FLUID P.D. (FT)	ROWS	FPI	COIL SIZE		PIPING RUNOUT SIZE	MANUFACTURER AND MODEL	REMARKS
							E.W.T.	L.W.T.	GPM				WIDTH (IN)	HEIGHT (IN)			
HC-1	RESIDENCY LAB 131 / SAV-1	80.0	2,250	55.0	90.3	0.4	140.0	122.2	9.0	0.9	2	12	24	16	1-1/4"	DAIKIN 5WH1202B	1 , 2 , 3 , 4 , 5
HC-2	SOIL/AGGREGATE 126 / SAV-2	20.4	560	55.0	91.2	0.2	140.0	119.6	2.0	1.2	2	11	12	12	3/4"	DAIKIN 5BD1102B	1 , 2 , 3 , 4 , 5
HC-3	ASPHALT LAB 124 / SAV-3	80.2	2,260	55.0	90.2	0.4	140.0	122.2	9.0	0.9	2	12	22	16	1-1/4"	DAIKIN 5WH1202B	1 , 2 , 3 , 4 , 5
HC-4	D-1 LAB 123 / SAV-4	52.0	1,500	55.0	90.0	0.4	140.0	120.0	5.2	5.0	2	12	16	16	1"	DAIKIN 5BD1202B	1 , 2 , 3 , 4 , 5
HC-5	CONCRETE 119 / SAV-5	20.9	585	55.0	90.4	0.3	140.0	119.1	2.0	1.2	2	11	12	12	3/4"	DAIKIN 5BD1102B	1 , 2 , 3 , 4 , 5
HC-6	MATERIAL LAB 118 / SV-6	25.7	725	55.0	90.1	0.4	140.0	121.0	2.7	1.9	2	12	12	12	3/4"	DAIKIN 5BD1202B	1 , 2 , 3 , 4 , 5
HC-7	ASPHALT LAB 117 / SV-7	80.2	2,260	55.0	90.2	0.4	140.0	122.2	9.0	0.9	2	12	22	16	3/4"	DAIKIN 5WH1202B	1 , 2 , 3 , 4 , 5
HC-8	RESIDENCY NOISE ROOM 130 / SAV-8	22.3	630	55.0	90.1	0.3	140.0	120.6	2.3	10.3	2	10	12	12	3/4"	DAIKIN 5BD1002B	1 , 2 , 3 , 4 , 5
HC-9	GENERAL LAB 125 / SAV-9	45.6	1,290	55.0	90.1	0.4	140.0	119.3	4.4	6.6	2	12	16	14	1"	DAIKIN 5BD1202B	1 , 2 , 3 , 4 , 5

REMARKS:

1. APPROVED ALTERNATE MANUFACTURERS: CARRIER, TRANE, & USA COIL.
2. SEE DETAILS FOR REQUIRED VALVING.
3. CAPACITIES BASED ON 2,200 FEET ELEVATION.
4. CAPACITIES BASED ON 100% WATER.
5. PROVIDE BACnet INTEGRATION CARD. SEE CONTROL DRAWINGS FOR SEQUENCE OF OPERATION.

CONTROL VALVE SCHEDULE (HOT WATER REHEAT COILS)

SYMBOL	HOT WATER COIL	AREA SERVED	VALVE TYPE	OPERATION	FLUID	FLOW (GPM)	FLOW RANGE (GPM)	P.D. (PSI)	MAXIMUM P.D. (PSI)	SIZE (IN)	MANUFACTURER AND MODEL	REMARKS
CV-1	HC-1	RESIDENCY LAB 131 / SAV-1	PRESSURE INDEPENDENT FIELD ADJUSTABLE CONTROL VALVE W/ 100% AUTHORITY	2-WAY MODULATING	35% PROPYLENE GLYCOL	9.0	6.0 TO 42.0	5.0	5.0	1-1/4"	BELL & GOSSETT ULTRA SETTER	1 , 2 , 3 , 4 , 5
CV-2	HC-2	SOIL/AGGREGATE 126 / SAV-2	PRESSURE INDEPENDENT FIELD ADJUSTABLE CONTROL VALVE W/ 100% AUTHORITY	2-WAY MODULATING	35% PROPYLENE GLYCOL	2.0	0.97 TO 5.85	5.0	5.0	3/4"	BELL & GOSSETT ULTRA SETTER	1 , 2 , 3 , 4 , 5
CV-3	HC-3	ASPHALT LAB 124 / SAV-3	PRESSURE INDEPENDENT FIELD ADJUSTABLE CONTROL VALVE W/ 100% AUTHORITY	2-WAY MODULATING	35% PROPYLENE GLYCOL	9.0	6.0 TO 42.0	5.0	5.0	1-1/4"	BELL & GOSSETT ULTRA SETTER	1 , 2 , 3 , 4 , 5
CV-4	HC-4	D-1 LAB 123 / SAV-4	PRESSURE INDEPENDENT FIELD ADJUSTABLE CONTROL VALVE W/ 100% AUTHORITY	2-WAY MODULATING	35% PROPYLENE GLYCOL	5.2	2.64 TO 15.89	5.0	5.0	1"	BELL & GOSSETT ULTRA SETTER	1 , 2 , 3 , 4 , 5
CV-5	HC-5	CONCRETE 119 / SAV-5	PRESSURE INDEPENDENT FIELD ADJUSTABLE CONTROL VALVE W/ 100% AUTHORITY	2-WAY MODULATING	35% PROPYLENE GLYCOL	2.0	0.44 TO 2.53	5.0	5.0	3/4"	BELL & GOSSETT ULTRA SETTER	1 , 2 , 3 , 4 , 5
CV-6	HC-6	MATERIAL LAB 118 / SV-6	PRESSURE INDEPENDENT FIELD ADJUSTABLE CONTROL VALVE W/ 100% AUTHORITY	2-WAY MODULATING	35% PROPYLENE GLYCOL	2.7	0.44 TO 2.53	5.0	5.0	3/4"	BELL & GOSSETT ULTRA SETTER	1 , 2 , 3 , 4 , 5
CV-7	HC-7	ASPHALT LAB 117 / SV-7	PRESSURE INDEPENDENT FIELD ADJUSTABLE CONTROL VALVE W/ 100% AUTHORITY	2-WAY MODULATING	35% PROPYLENE GLYCOL	9.0	0.44 TO 2.53	5.0	5.0	3/4"	BELL & GOSSETT ULTRA SETTER	1 , 2 , 3 , 4 , 5
CV-8	HC-8	RESIDENCY NOISE ROOM 130 / SAV-8	PRESSURE INDEPENDENT FIELD ADJUSTABLE CONTROL VALVE W/ 100% AUTHORITY	2-WAY MODULATING	35% PROPYLENE GLYCOL	2.3	0.44 TO 2.53	5.0	5.0	3/4"	BELL & GOSSETT ULTRA SETTER	1 , 2 , 3 , 4 , 5
CV-9	HC-9	GENERAL LAB 125 / SAV-9	PRESSURE INDEPENDENT FIELD ADJUSTABLE CONTROL VALVE W/ 100% AUTHORITY	2-WAY MODULATING	35% PROPYLENE GLYCOL	4.4	2.64 TO 15.89	5.0	5.0	1"	BELL & GOSSETT ULTRA SETTER	1 , 2 , 3 , 4 , 5

REMARKS:

1. APPROVED ALTERNATE MANUFACTURERS: BELIMO, SIEMENS, JOHNSON CONTROLS.
2. PROVIDE W/ MANUFACTURER'S PRESSURE INDEPENDENT FLOW ACCURACY WITHIN +/-5% OF DESIRED FLOW RATE UP TO 60 PSI, (2) PRESSURE / TEMPERATURE PORTS, EXTERNAL ADJUSTABLE DIAL W/ GPM SCALE, MODULATING FLOW CONTROL W/ LINEAR STROKE.
3. PROVIDE W/ MANUFACTURER'S 140 PSI CLOSE-OFF PRESSURE.
4. SEE CONTROL DRAWINGS FOR THE SEQUENCE OF OPERATION.
5. COORDINATE THE REQUIRED FLOW RATE W/ THE ACTUAL HOT WATER COILS PROVIDED.

HUMIDIFIER SCHEDULE

SYMBOL	AREA SERVED	AREA R.H. / °F	STEAM CAPACITY	GAS INPUT	ELECTRIC REQUIREMENTS			OUTSIDE AIR		ENTERING DISTRIBUTOR		AIR STREAM SYSTEM		WATER SYSTEM	MANUFACTURER AND MODEL	REMARKS
			LBS OF STEAM/HR	MBH	AMPS	V/□		TEMP.	RH %	TEMP.	RH %	DUCT SIZE (WxH)	DUCT CFM			
HUM-1	AIR HANDLING UNIT AHU-1	30% / 70°	330	368.5	2.7	115/1		3°F	5%	55°F	6%	92"X70"	13,000	CITY / SOFTENED WATER	CAREL UG150H11105	1 , 2 , 3

REMARKS:

1. APPROVED ALTERNATE MANUFACTURERS: DRISTEAM AND NEPTRONIC.
2. PROVIDE WITH FULLY MODULATING CONTROL FUNCTIONS, RUBBER STEAM HOSES, STAINLESS STEEL STEAM DISTRIBUTOR, 3/8" CONDENSATE HOSE, STEAM INLET KIT, DUCT MOUNTED DIFFERENTIAL PRESSURE SENSOR, DUCT TEMPERATURE & RELATIVE HUMIDITY SENSOR, AND REMOTE PGDX TERMINAL KIT. PROVIDE FACTORY START-UP AND CALIBRATION.
3. CONNECT UNIT TO DDC CONTROL SYSTEM.

LAB EXHAUST FAN SCHEDULE

SYMBOL	AREA SERVED	UNIT TYPE	BLOWER						ELECTRICAL		MAXIMUM SONES	OPERATING WEIGHT (LBS)	MANUFACTURER AND MODEL	REMARKS
			CFM		ESP	MAXIMUM RPM	DRIVE	# OF FANS	HP PER FAN	V/Ø				
			DESIGN	ACTUAL										
LEF-1	LAB AREA	NEW FUME EXHAUST FAN (HIGH-PLUME DILUTION)	15,000 (7,500 PER FAN)	12,310 (6,155 PER FAN)	4.0"	1,800	BELT	2	15.0	208/3	36	5,100	MK PLASTICS MODEL AXIJET	1 , 2 , 3

REMARKS:

1. PROVIDE FAN WITH FRP AND POLYESTER-COATED-STEEL (4-6 MILS) CONSTRUCTION, 316SS HARDWARE, INTAKE WEATHER COWL, 42"Ø ROUND SIDE-INLET COLLAR, DRAIN AND ACCESS COVER, FLEX CONNECTOR, FAN ROOF CURB AND RAILS, SOUND ATTENUATOR, AND SPRING VIBRATION ISOLATION. UNIT SHALL HAVE AN EFFECTIVE PLUME HEIGHT OF 41.4' ABOVE FINISH ROOF ELEVATION.
2. CONTRACTOR SHALL PROVIDE AND INSTALL THE FOLLOWING OPTIONS AND SEQUENCE:

   2.1. PROVIDE AND INSTALL THE FAN SYSTEM WITH THE FOLLOWING ITEMS TO ALLOW THE SYSTEM TO OPERATE AS A VARIABLE SPEED FAN SYSTEM:
   - 2.1.1. (1) SHARED PLENUM WITH FACTORY BYPASS/ISOLATION DAMPERS (ANODIZED ALUMINUM, PARALLEL AIRFOIL CONSTRUCTION)
   - 2.1.2. (2) NEW DISCONNECT SWITCHES WITH AUXILIARY CONTACTS
   - 2.1.3. (2) VARIABLE FREQUENCY DRIVES (NEMA 3R)

   2.2. THE SPEED OF THE FAN MOTORS AND BYPASS DAMPERS SHALL BE CONTROLLED THROUGH THE DDC CONTROLLER TO MAINTAIN A NOZZLE VELOCITY OF 5,000 FPM WHICH WILL PROVIDE AN EFFECTIVE PLUME HEIGHT OF 41.4 FEET AT MINIMUM FLOW REQUIREMENTS.
3. THE AIR BALANCING CONTRACTOR SHALL CONFIRM THAT THE NEW FAN STATIC CONTROLS ARE MAINTAINING THE STATIC PRESSURE SET POINT.

DIFFUSER SCHEDULE

SYMBOL	NOMINAL SIZE	NECK / RUNOUT SIZE	CFM RANGE	REMARKS
D-1 CFM 6"Ø	6X6	6"Ø	0 - 90	1 , 2 , 3 , 4 , 5 , 6 , 7
D-2 CFM 10"Ø	10"Ø	10"Ø	0-350	1 , 3 , 4 , 5 , 6 , 7 , 9
D-3 CFM 12"Ø	12"Ø	12"Ø	0-400	1 , 3 , 4 , 5 , 6 , 7 , 9
D-4 CFM 14"Ø	14"Ø	14"Ø	0-550	1 , 3 , 4 , 5 , 6 , 7 , 9
D-5 CFM 6"Ø	13"Ø	6"Ø	0 - 90	1 , 3 , 4 , 5 , 6 , 7 , 8
D-6 CFM 8"Ø	18"Ø	8"Ø	90 - 200	1 , 3 , 4 , 5 , 6 , 7 , 8
D-7 CFM 10"Ø	22"Ø	10"Ø	200 - 350	1 , 3 , 4 , 5 , 6 , 7 , 8

REMARKS:

1. ALTERNATE MANUFACTURERS: ANEMOSTAT, J&J REGISTER, NAILOR, METAL-AIRE, TUTTLE & BAILEY, KRUEGER, PRICE, AND UNITED ENERTECH.
2. SIZES BASED ON TITUS MODEL TDC SERIES.
3. SIZES BASED ON A MAXIMUM NC LEVEL OF 25.
4. ALL DIFFUSERS LOCATED IN LAY-IN CEILING AREAS SHALL BE BORDER TYPE 3 AND BE MOUNTED IN MANUFACTURER PROVIDED 24"x24" PANELS. ALL DIFFUSERS LOCATED IN HARD CEILING AREAS SHALL BE BORDER TYPE 6 (BEVELED) SURFACE MOUNTED. SEE ARCHITECTURAL PLANS FOR LOCATIONS OF VARIOUS CEILING TYPES.
5. SEE HVAC FLOOR PLANS FOR DIRECTIONAL THROW REQUIREMENTS FOR EACH DIFFUSER.
6. WHENEVER THERE IS A DISCREPANCY BETWEEN THE RUNOUT DUCT SIZE SHOWN ON THE PLANS AND THAT SHOWN IN THE SCHEDULE, ALWAYS USE THE LARGER OF THE TWO DUCT SIZES.
7. COLOR TO BE SELECTED BY ARCHITECT.
8. SIZES BASED ON TITUS MODEL TMRA, TYPE 3, ROUND CEILING DIFFUSER, STEEL CONSTRUCTION.
9. SIZES BASED ON TITUS MODEL PAS, PERFORATED DIFFUSER, STEEL CONSTRUCTION.

RETURN & EXHAUST GRILLE SCHEDULE

SYMBOL	NOMINAL SIZE	NECK / RUNOUT SIZE	CFM RANGE	REMARKS
R-1 8"Ø	10X10	8"Ø	80-180	1 , 2 , 3 , 4 , 5 , 6
R-2 10X6	10X6	10X6	0-200	1 , 3 , 5 , 6 , 7
R-3 12X8	12X8	12X8	200-300	1 , 3 , 5 , 6 , 7
R-4 18X10	18X10	18X10	300-550	1 , 3 , 5 , 6 , 7

REMARKS:

1. ALTERNATE MANUFACTURERS: ANEMOSTAT, CARNES, PRICE, NAILOR, METAL-AIRE, TUTTLE & BAILEY, KRUEGER, J&J REGISTER, AND UNITED ENERTECH.
2. SIZES BASED ON TITUS MODEL 50F, ALUMINUM EGGCRATE RETURN GRILLE, 1/2" x 1/2" x 1" SPACING (SINGLE CORE). PROVIDE SQUARE TO ROUND TRANSITION (WHERE ROUND RUN-OUT INDICATED).
3. SIZES BASED ON A MAXIMUM NC LEVEL OF 25.
4. ALL GRILLES LOCATED IN LAY-IN CEILING AREAS SHALL HAVE BORDER #3, UNLESS OTHERWISE INDICATED. ALL GRILLES LOCATED IN HARD CEILING AREAS SHALL HAVE BORDER #1, UNLESS OTHERWISE INDICATED. REFER TO ARCHITECTURAL PLANS FOR LOCATIONS OF VARIOUS CEILING TYPES. SHEET METAL DUCTWORK VISIBLE BEHIND GRILLE SHALL BE PAINTED FLAT BLACK.
5. WHENEVER THERE IS A DISCREPANCY BETWEEN THE RUNOUT DUCT SIZE SHOWN ON THE PLANS AND THAT SHOWN IN THE SCHEDULE, ALWAYS USE THE LARGER OF THE TWO DUCT SIZES.
6. COLOR TO BE SELECTED BY ARCHITECT.
7. HIGH WALL GRILLE SIZES BASED ON TITUS MODEL 355 RL, STEEL BAR GRILLE, FIXED BLADES, 1/2" SPACING, 35° DEFLECTION, ADJUSTABLE OPPOSED BLADE DAMPER.

BYPASS CONTROL VALVE SCHEDULE

SYMBOL	SERVES	VALVE TYPE	OPERATION	FLUID	FLOW (GPM)	FLOW RANGE (GPM)	P.D. (PSI)	MAXIMUM P.D. (PSI)	SIZE (IN)	CONTROL	MANUFACTURER AND MODEL	REMARKS
BCV-1	HEATING WATER SYSTEM	PRESSURE INDEPENDENT	2-WAY MODULATING	100% WATER	25	19-110	2.7	5.0	2.0	REFER TO THE CONTROL SCHEMATICS	B&G ULTRA SETTER	1 , 2 , 3

REMARKS:

1. APPROVED ALTERNATE MANUFACTURERS: BELIMO, GRISWOLD, & ALFA-LAVAL.
2. CAPACITIES BASED ON 100% WATER.
3. SEE CONTROL DRAWINGS FOR SEQUENCE OF OPERATION.

PROFESSIONAL ENGINEER LICENSED 16683 5/14/2024 STATE OF IDAHO CHRISTOPHER D. YKE

MUSGROVE ENGINEERING, P.A.
234 S. Whisperwood Way
Boise, ID 83709
208.384.0585
645 West 25th Street
Idaho Falls, ID 83402
208.523.2862
www.musgrovepa.com

Project No. 23-239

MILLER STAUFFER ARCHITECTS
601 E. FRONT AVE., STE 201
COEUR D' ALENE, IDAHO 83814
P 208.664.1773 F 208.667.3174
WWW.MILLERSTAUFFER.COM

MECHANICAL SCHEDULES

BID SET
5/13/2024

D-1 Testing Laboratory
600 W Prairie Ave
Coeur d'Alene, ID 83814

LICENSED ARCHITECT AR-984031 MICHEAL P. WALKER STATE OF IDAHO

No.	Description	Date

PROJECT NUMBER 23239
PRINCIPAL Designer
PROJECT MANAGER Author

M5.1

ELECTRIC HEATER SCHEDULE

SYMBOL	AREA SERVED	UNIT TYPE	FAN			ELECTRICAL				MANUFACTURER AND MODEL	REMARKS
			CFM	RPM	HP	KW	STEPS	V/Ø	AMPS		
EH-1	NUCLEAR GAUGE STORAGE 128	SURFACE MOUNTED	245	1,400	1/8	3.0	1	208 / 1	14.4	MARKEL MODEL 3420 SERIES	1 , 3 , 5
EH-2	ENCLOSED MATERIAL STORAGE 127	SURFACE MOUNTED	245	1,400	1/8	3.0	1	208 / 1	14.4	MARKEL MODEL 3420 SERIES	1 , 3 , 5
EH-3	ENCLOSED MATERIAL STORAGE 127	SURFACE MOUNTED	245	1,400	1/8	3.0	1	208 / 1	14.4	MARKEL MODEL 3420 SERIES	1 , 3 , 5
EH-4	FIRE RISER 121	SURFACE MOUNTED	245	1,400	1/8	2.0	1	208 / 1	9.6	MARKEL MODEL 3420 SERIES	1 , 3 , 5
EH-5	LAB MECHANICAL 120	WALL MOUNTED UNIT HEATER	300	1,400	-	3.0	1	208 / 1	14.4	REZNOR MODEL EGW-3	1 , 4 , 5
EH-6	ELECTRICAL 116	RECESSED	245	1,400	1/8	2.0	1	208 / 1	9.6	MARKEL MODEL 3420 SERIES	1 , 3 , 5
EH-7	LOBBY 101	RECESSED	245	1,400	1/8	2.0	1	208 / 1	9.6	MARKEL MODEL 3420 SERIES	1 , 2 , 6
EH-8	OPEN OFFICE 110	RECESSED	245	1,400	1/8	2.0	1	208 / 1	9.6	MARKEL MODEL 3420 SERIES	1 , 2 , 6
EH-9	REST. 102	RECESSED	245	1,400	1/8	2.0	1	208 / 1	9.6	MARKEL MODEL 3420 SERIES	1 , 2 , 6

REMARKS:

1. APPROVED ALTERNATE MANUFACTURERS: BRASCH, QMARK, INDEECO, OUELLET, AND CHROMALOX.
2. MOUNT BOTTOM OF HEATER 12" ABOVE FINISH FLOOR.
3. MOUNT BOTTOM OF HEATER 24" ABOVE FINISH FLOOR.
4. PROVIDE WITH WALL SUSPENSION BRACKET MOUNTED APPROXIMATELY 9'-0" ABOVE FINISH FLOOR.
5. SEE CONTROL DRAWINGS FOR SEQUENCE OF OPERATION.
6. PROVIDE WITH INTEGRAL THERMOSTAT. UNIT TO BE STANDALONE AND NOT CONTROLLED BY DDC.

MECHANICAL SPECIALTY EQUIPMENT SCHEDULE

SYMBOL	EQUIPMENT DESCRIPTION	SYSTEM SERVED	DESCRIPTION	MANUFACTURER AND MODEL
AS-1	AIR SEDIMENT SEPARATOR	HOT WATER LOOP	DESIGN FLOW IS 80 GPM WITH A DESIGN PD OF 1.0 FT-H O.	B & G MODEL SRS-3F ALTERNATE APPROVED MANUFACTURERS: TACO, ARMSTRONG, AND PACO
ET-1	EXPANSION TANK (VERTICAL DIAPHRAGM TYPE)	HOT WATER LOOP	7.8 GALLON CAPACITY, ACCEPTANCE 6.3 GALLONS-DIAPHRAGM TYPE EXPANSION TANK. (PRE-CHARGED TO 10 PSI)	B & G MODEL D-15 ALTERNATE APPROVED MANUFACTURERS: TACO, ARMSTRONG, AND PACO
FM-1	HYDRONIC FLOW METER	HOT WATER LOOP	ELECTROMAGNETIC FLOW METER	ONICON F-3200 FLOW METER
PF-1	POT FEEDER	HOT WATER LOOP	CHEMICAL POT FEEDER TANK	WESSELS MODEL CPFT-2

SPLIT SYSTEM AIR CONDITIONING UNIT SCHEDULE (96%+ GAS)

SYMBOL	UNIT TYPE	NOMINAL TONS	SUPPLY FAN				COOLING CAPACITY AT 95° OSA, 80° EDB, 62° EWB		GAS HEATING CAPACITY		ELECTRICAL FOR CONDENSING UNIT			OSA CFM	MIN. SEER2	FURNACE OPERATING WEIGHT (LBS)	MANUFACTURER AND MODEL	REMARKS
			CFM	ESP	HP	V/Ø	TOTAL MBH	SENSIBLE MBH	INPUT MBH	OUTPUT MBH	MCA	MOCP	V/Ø					
F-1 , CU-1	MULTIPOISE	5	2,250	0.70	1.0	115/1	52.0	52.0	80	78.0	32.4	50	208/1	260	14.0	450	CARRIER 59SC6A080C211-20 FURNACE CARRIER 24SCA460 CONDENSING UNIT	1 , 2 , 3 , 4

REMARKS:

1. APPROVED ALTERNATE MANUFACTURERS: TRANE, LENNOX, DAIKIN AND YORK.
2. PROVIDE UNIT WITH MATCHING COOLING COIL, FIELD INSTALLED HARD START FOR SINGLE PHASE UNITS, SHORT CYCLING DEVICE, CRANKCASE HEATER, EXPANSION VALVE, HIGH/LOW PRESSURE SWITCH, NEUTRALIZING KIT - 3/4" LINE SIZE, LOW AMBIENT CONTROLS (TO 0°F) & CONCENTRIC VENT KIT. SET FAN MOTOR ON FURNACE TO MAINTAIN A CONSTANT SPEED.
3. PROVIDE UNIT WITH MANUFACTURER'S LONG LINE SET AND ACCESSORIES, SIZED BY MANUFACTURER AND TAMPER PROOF PORT CAPS.
4. SEE CONTROL DRAWINGS FOR SEQUENCE OF OPERATION.

SOUND ATTENUATOR SCHEDULE

SYMBOL	TYPE	LOCATION	AIRFLOW (CFM)	MAXIMUM FACE VELOCITY (FPM)	DIMENSIONS			FACE AREA (SQ FT)	MAXIMUM PRESSURE DROP ("WC)	WEIGHT (LBS)	REQUIRED DYNAMIC INSERTION LOSS OCTAVE BAND								MANUFACTURER AND MODEL	REMARKS
											OCTAVE BAND FREQUENCY									
					LENGTH (IN)	WIDTH (IN)	HEIGHT (IN)				63	125	250	500	1000	2000	4000	8000		
SA-1	DUCT SILENCER	AHU-1 SUPPLY	13,000	2,500	84	58	22	-	0.22	-	11	18	28	30	36	26	22	14	VIBRO ACOUSTICS SA-S	1 , 2

REMARKS:

1. APPROVED ALTERNATE MANUFACTURERS: VAW, COMMERCIAL ACOUSTICS, RINK, AEROSONICS, DYNASONICS.
2. PROVIDE WITH FLANGED, GASKETED, AND BOLTED DUCTWORK CONNECTIONS.

PENTHOUSE SCHEDULE

SYMBOL	AREA SERVED	TYPE	NUMBER OF TIERS	THROAT SIZE	MINIMUM FREE AREA (ft^2)	FINISH	MANUFACTURER AND MODEL	REMARKS
PH-1	EQUIPMENT T01	TIERED	2	8X8	0.45	AAMA 2604	COOK MODEL 8 TR	1 , 2 , 3

REMARKS:

1. APPROVED ALTERNATE MANUFACTURERS: UNITED ENERTECH, GREENHECK, CARNES, AIROLITE, LOUVERS & DAMPERS, & RUSKIN .
2. COLOR TO BE SELECTED BY ARCHITECT.
3. PROVIDE WITH BIRD SCREEN, BACKDRAFT DAMPER, AND ROOF CURB.

LOUVER SCHEDULE

SYMBOL	SERVICE	TYPE	NOMINAL SIZE	MINIMUM FREE AREA (SQ.FT.)	FINISH	MANUFACTURER AND MODEL	REMARKS
L-1	EF-6 MAKEUP AIR	FIXED DRAINABLE	20"X12"	0.54	AAMA2604	RUSKIN ELF6375DX	1 , 2 , 3 , 4
L-2	EF-7 MAKEUP AIR	FIXED DRAINABLE	14"X12"	0.36	AAMA2604	RUSKIN ELF6375DX	1 , 2 , 3 , 4

REMARKS:

1. APPROVED ALTERNATE MANUFACTURERS: GREENHECK, AMERICAN WARMING, LOUVERS & DAMPERS, ARROW UNITED, NAILOR, POTTORFF, AND UNITED ENERTECH.
2. COLOR TO BE SELECTED BY ARCHITECT.
3. PROVIDE WITH FLANGED FRAME, BIRD SCREEN, AND 120V/Ø LOW LEAKAGE MOTORIZED DAMPER.
4. SEE CONTROL DRAWINGS FOR SEQUENCE OF OPERATION.

DUCTLESS SPLIT HIGH WALL COOLING UNIT SCHEDULE

SYMBOL	AREA SERVED	NOMINAL TONS	UNIT TYPE	SUPPLY FAN		COOLING CAPACITY AT 95°F OSA		ELECTRICAL OUTDOOR UNIT			MINIMUM SEER	INDOOR / OUTDOOR WEIGHT (LBS)	MANUFACTURER AND MODEL	REMARKS
				CFM	V/Ø	TOTAL (MBH)	SENSIBLE (MBH)	MCA	MOCP	V/Ø				
DFC-1 , DCU-1	IT 115	2.0	HIGH WALL COOLING ONLY	640	THRU O/U	25.0	18.0	18	25	208/1	18.5	35 / 95	CARRIER FAN COIL MODEL 40MHH24 CARRIER CONDENSING UNIT MODEL 38MHRBC24	1 , 2 , 3 , 4 , 5 , 6

REMARKS:

1. APPROVED ALTERNATE MANUFACTURERS: LENNOX, MITSUBISHI, PANASONIC, SAMSUNG, LG, DAIKIN, OR APPROVED EQUAL BY ENGINEER.
2. CONTROL UNIT WITH MANUFACTURER'S HARD-WIRED WALL MOUNTED 7 DAY PROGRAMMABLE THERMOSTAT.
3. PROVIDE MANUFACTURERS CRANKCASE HEATER, LOW AMBIENT CONTROLS & (TO 0°F) WIND BAFFLES, REFRIGERATION LINE SET SIZED BY MANUFACTURER, AND TAMPER PROOF PORT CAPS.
4. PROVIDE WITH MIRO INDUSTRIES HEAVY DUTY MECHANICAL GALVANIZED ROOF SUPPORT WITH ADJUSTABLE SUPPORT LEGS. SUPPORT SHALL EXTEND A MINIMUM OF 6" BEYOND EQUIPMENT IN EACH DIRECTION. BOLT EQUIPMENT TO MECHANICAL SUPPORT.
5. PROVIDE WITH MANUFACTURER'S CONDENSATE PUMP, CONCEAL PUMP BEHIND UNIT WITHIN MOUNTING BRACKET ASSEMBLY. PUMP SHALL BE POWERED BY FAN COIL.
6. ELECTRICAL TO PROVIDE DISCONNECT.

PROFESSIONAL ENGINEER LICENSED 16683 5/14/2024 STATE OF IDAHO CHRISTOPHER D. KEE

MUSGROVE ENGINEERING, P.A.
234 S. Whispertwood Way
Boise, ID 83709
208.384.0585
645 West 25th Street
Idaho Falls, ID 83402
208.523.2862
www.musgrovepa.com

Project No. 23-239

MILLER STAUFFER ARCHITECTS
601 E. FRONT AVE., STE 201
COEUR D' ALENE, IDAHO 83814
P 208.664.1773 F 208.667.3174
WWW.MILLERSTAUFFER.COM

MECHANICAL SCHEDULES

BID SET
5/13/2024

LICENSED ARCHITECT AR-984931 MICHEAL P. WALKER STATE OF IDAHO

D-1 Testing Laboratory
600 W Prairie Ave
Coeur d'Alene, ID 83814

No.	Description	Date

PROJECT NUMBER 23239
PRINCIPAL Designer
PROJECT MANAGER Author

M5.2

5/14/2024 9:48:20 AM Autodesk Docs://ITD D-1 Laboratory/23239 ITD D1 Lab MEP _r23.rvt

MUSGROVE ENGINEERING, P.A.
234 S. Whisperwood Way
Boise, ID 83709
208.384.0585
645 West 25th Street
Idaho Falls, ID 83402
208.523.2862
www.musgroveepa.com
Project No. 23-239

PROFESSIONAL ENGINEER LICENSED 16683 5/14/2024 STATE OF IDAHO CHRISTOPHER DYKE

AIR HANDLING UNIT SCHEDULE

SYMBOL	TYPE	AREA SERVED	SUPPLY FAN								DX / DEHUMIDIFICATION COOLING COIL										GAS HEATING COIL						HUMIDIFICATION COIL							COMBINATION FILTER					ELECTRICAL REQUIREMENTS			MIN. O.S.A. CFM	AHRI EER RATING	OPERATING WEIGHT (LBS)	MANUFACTURER AND MODEL	REMARKS
			TYPE	AIRFLOW (CFM)		ESP	TSP	HP/QTY	V/PH	RPM	CAPACITY (MBH)		CFM	E.A.T. (°F)		L.A.T. (°F)		MAX FACE VELOCITY (FPM)	AIR P.D. (W.C.)	MAX RH	CAPACITY (MBH)		CFM	E.A.T. (°F)	L.A.T. (°F)	MODULATION %	UNIT TAG	COIL AIR P.D. (FT)	FINNED HEIGHT (IN)	FINNED WIDTH (IN)	FACE AREA (FT^2)	FACE VEL. (FPM)	COIL TYPE	PRE-FILTER		FINAL FILTER		MAX FACE VELOCITY (FPM)	MCA	MROPD	V/PH					
				DESIGN	ACTUAL						SENSIBLE	TOTAL		D.B.	W.B.	D.B.	W.B.				INPUT	OUTPUT		D.B.	D.B.									EFF.	DEPTH	EFF.	DEPTH								
AHU-1	SEMI-CUSTOM	LABORATORIES	REMARK 2	13,000	11,540	1.5	4.3	7.6 \ 4	208/3	2,246	502.1	502.1	13,000	92.0	63.5	53.6	49.3	500	0.6	50%	1,125.0	893.8	13,000	3.0	55.0	5-100%	HUM-1	0.01	24.0	109.0	52.1	451	REMARK 6	MERV 8	2"	MERV 13	4"	500	178.9	225.0	208 / 3	3,950	10.8	10,000	DAIKIN DPSA040	3 , 4 , 5 , 6

REMARKS:

1. APPROVED ALTERNATE MANUFACTURERS: SCOTT SPRINGFIELD, TEMPTROL, HUNT AIR, & ENERGY LABS.
2. PROVIDE FAN ASSEMBLY WITH ECM MOTORIZED IMPELLER FANS.
3. EXTERNAL STATIC PRESSURE (ESP) DOES NOT INCLUDE THE COILS, FILTERS, OR OTHER INTERNAL AIR HANDLER LOSSES.
4. CAPACITIES FOR FANS AND COILS ARE BASED ON 2,200 FEET ELEVATION.
5. PROVIDE WITH 20" TALL VIBRATION ISOLATION ROOF CURB.
6. SEE HUMIDIFIER SCHEDULE FOR ADDITIONAL INFORMATION.

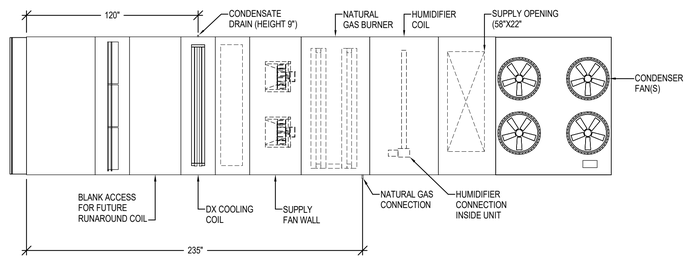

TOP VIEW

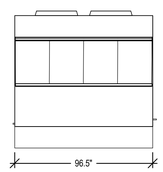

LEFT VIEW

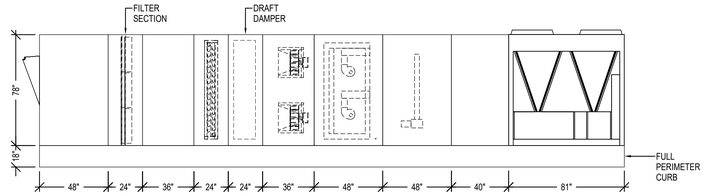

FRONT VIEW

MILLER STAUFFER ARCHITECTS
601 E. FRONT AVE., STE 201
COEUR D' ALENE, IDAHO 83814
P 208.664.1773 F 208.667.3174
WWW.MILLERSTAUFFER.COM

MECHANICAL SCHEDULES

BID SET
5/13/2024

D-1 Testing Laboratory
600 W Prairie Ave
Coeur d'Alene, ID 83814

LICENSED ARCHITECT AR-984031 MICHEAL P. WALKER STATE OF IDAHO

No.	Description	Date

PROJECT NUMBER 23239
PRINCIPAL Designer
PROJECT MANAGER Author

M5.3

5/14/2024 9:48:21 AM Autodesk Docs://ITD D-1 Laboratory/23239 ITD D1 Lab MEP_r23.rvt

CONTROLS LEGEND

SYMBOL	DESCRIPTION
AI	ANALOG INPUT
DI	DIGITAL INPUT
AO	ANALOG OUTPUT
DO	DIGITAL OUTPUT
--	CONTROL ELEMENT TAG
	3-WAY, 2-WAY CONTROL VALVE
	PARALLEL BLADE CONTROL DAMPER
	OPPOSED BLADE CONTROL DAMPER
	OPPOSED BLADE CONTROL DAMPER

NOTES:
1. ALL DATA THAT IS NOTED TO BE "ADJUSTABLE" ON THE FOLLOWING CONTROL SHEETS SHALL MADE BOTH ADJUSTABLE AND LOCKABLE FROM THE OPERATOR'S WORKSTATION AND IN PARTICULAR, THE GRAPHICAL USER INTERFACE (GUI).
2. GLOBAL CALENDAR SCHEDULING SHALL BE PROVIDED.

CONTROLS LEGEND

SYMBOL	DESCRIPTION
M	MOTOR
	THERMOWELL
	CURRENT SENSING RELAY
	CONTROL RELAY
AS	AIRFLOW MEASURING STATION (EBTRON GOLD SERIES) BY CONTROL CONTRACTOR
DX / C	DX REFRIGERANT COOLING COIL
C / C	CHILLED WATER COOLING COIL
H / C	HOT WATER HEATING COIL
HR / C	HEAT RECOVERY COIL
PH / C	HOT WATER PREHEAT COIL
RH / C	HOT WATER REHEAT COIL
	GAS-FIRED HEAT EXCHANGER
T	THERMOSTAT
S	SPACE TEMPERATURE SENSOR
H	SPACE HUMIDITY SENSOR
CO	SPACE CARBON MONOXIDE SENSOR
PT	SPACE PRESSURE TRANSMITTER
	LOW VOLTAGE SIGNAL
	LINE VOLTAGE POWER

CONTROLS LEGEND

SYMBOL	DESCRIPTION
APS	AIRFLOW PROVING SWITCH
BAS	BUILDING AUTOMATION SYSTEM
BCV	BYPASS CONTROL VALVE
C	CONDENSATE
CFL	CONDENSATE FLOAT LEVEL SWITCH
CHWR	CHILLED WATER RETURN
CHWS	CHILLED WATER SUPPLY
CR	CONTROL RELAY
CSR	CURRENT SENSING RELAY
D	DAMPER
DA	DAMPER ACTUATOR
DDC	DIRECT DIGITAL CONTROLS
DPT	DAMPER POSITION TRANSMITTER
FS	FLOW SWITCH
GR	GLYCOL RETURN
GS	GLYCOL SUPPLY
HWR	HOT WATER RETURN
HWS	HOT WATER SUPPLY
LS	LIMIT SWITCH
PDS	PRESSURE DIFFERENTIAL SWITCH
PDT	PRESSURE DIFFERENTIAL TRANSMITTER
PS	PRESSURE SWITCH
PT	PRESSURE TRANSMITTER
TT	TEMPERATURE TRANSMITTER
TV	TEMPERATURE CONTROL VALVE
WL	WATER LEVEL SWITCH

MUSGROVE ENGINEERING, P.A.
234 S. Whisperwood Way
Boise, ID 83709
208.384.0585
645 West 25th Street
Idaho Falls, ID 83402
208.523.2862
www.musgrovepa.com

Project No. 23-239

PROFESSIONAL ENGINEER LICENSED 16683 5/14/2024 STATE OF IDAHO CHRISTOPHER DYKE

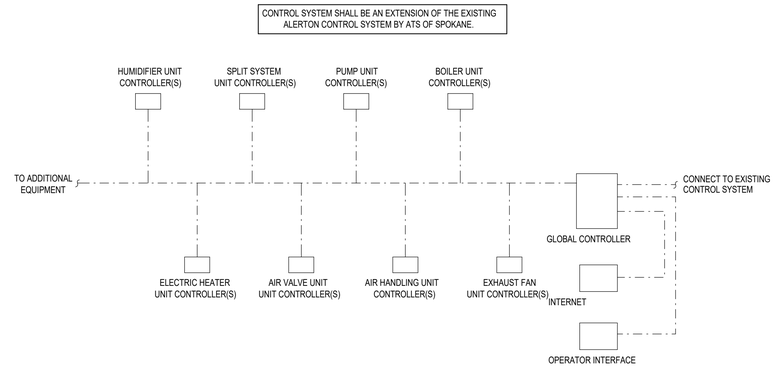

CONTROL SYSTEM ARCHITECTURE

GENERAL:
THE HEAT RELIEF FAN W/ LOUVER UNIT SYSTEM CONSISTS OF A MOTORIZED INTAKE WALL LOUVER, MOTORIZED EXHAUST DAMPER, AN INLINE HEAT RELIEF FAN, AND A ZONE TEMPERATURE SENSOR. THE DDC CONTRACTOR SHALL PROVIDE A NEW DDC CONTROL PACKAGE DEDICATED TO THE COMPLETE OPERATION OF THE SYSTEM .

THE NEW SPACE TEMPERATURE SENSOR SHALL SIGNAL THE DDC CONTROLLER ITS TEMPERATURE AND THE TEMPERATURE OF THE COOLING SET POINT. THE SPACE TEMPERATURE SENSOR SHALL BE PROVIDED WITH A MANUAL OVERRIDE SWITCH TO START THE FAN AND OPEN THE DAMPERS.

HEAT RELIEF MODE OF OPERATION :
THE HEAT RELIEF FAN W/ LOUVER SYSTEM SHALL BE ENABLED WHENEVER THE FOLLOWING CONDITIONS BOTH EXIST:

1. THE SPACE TEMPERATURE INCREASES ABOVE THE COOLING SET POINT.
2. THE OUTDOOR AIR TEMPERATURE IS BELOW THE COOLING SET POINT.

WHEN THE ABOVE CONDITIONS EXIST THE DDC CONTROLLER SHALL SEQUENCE THE FOLLOWING:

1. SEND AN OPEN COMMAND TO THE INTAKE WALL LOUVER.
   a. VALIDATE THE POSITION OF THE INTAKE WALL LOUVER THROUGH THE DAMPER END SWITCH.
      1) IF THE LOUVER FAILS TO OPEN, AN ALARM OF THE EVENT SHALL BE SENT TO THE OPERATOR'S WORKSTATION.
2. SEND AN OPEN COMMAND TO THE EXHAUST DAMPER.
   a. VALIDATE THE POSITION OF THE EXHAUST DAMPER THROUGH THE DAMPER END SWITCH.
      1) IF THE DAMPER FAILS TO OPEN, AN ALARM OF THE EVENT SHALL BE SENT TO THE OPERATOR'S WORKSTATION.
3. SEND AN ENABLE COMMAND TO THE HEAT RELIEF FAN TO RUN CONTINUOUSLY.
   a. VALIDATE THE STATUS OF THE FAN THROUGH THE CURRENT SENSING RELAY.
      1) IF THE FAN FAILS TO RUN, AN ALARM OF THE EVENT SHALL BE SENT TO THE OPERATOR'S WORKSTATION.

THE HEAT RELIEF MODE OF OPERATION SHALL BE DISABLED WHENEVER THE FOLLOWING CONDITION EXISTS:

1. THE SPACE TEMPERATURE REACHES 3°F BELOW THE COOLING SET POINT.

WHEN THE ABOVE CONDITION EXISTS THE DDC CONTROLLER SHALL SEQUENCE THE FOLLOWING:

1. SEND A DISABLE COMMAND TO THE HEAT RELIEF FAN.
   a. VALIDATE THE STATUS OF THE FAN THROUGH THE CURRENT SENSING RELAY.
      1) IF THE FAN FAILS TO DISABLE, AN ALARM OF THE EVENT SHALL BE SENT TO THE OPERATOR'S WORKSTATION.
2. SEND A CLOSE COMMAND TO THE EXHAUST DAMPER.
   a. VALIDATE THE POSITION OF THE EXHAUST DAMPER THROUGH THE DAMPER END SWITCH.
      1) IF THE DAMPER FAILS TO CLOSE, AN ALARM OF THE EVENT SHALL BE SENT TO THE OPERATOR'S WORKSTATION.
3. SEND A CLOSE COMMAND TO THE INTAKE WALL LOUVER.
   a. VALIDATE THE POSITION OF THE INTAKE WALL LOUVER THROUGH THE DAMPER END SWITCH.
      1) IF THE LOUVER FAILS TO CLOSE, AN ALARM OF THE EVENT SHALL BE SENT TO THE OPERATOR'S WORKSTATION.

THE SPACE TEMPERATURE COOLING SET POINT SHALL BE SET AT 85°F (ADJUSTABLE).
THE HEAT RELIEF FAN SHALL HAVE A MINIMUM OPERATION TIME OF 5 MINUTES (ADJUSTABLE)

HEAT RELIEF FAN W/ LOUVER SEQUENCE OF OPERATION

(EF-6/L-1 & EF-7/L-2)

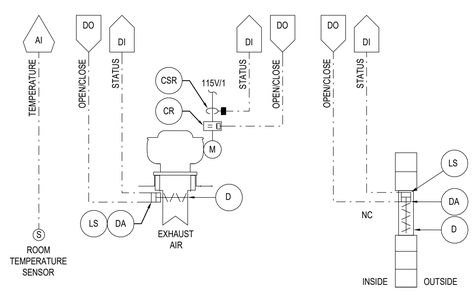

HEAT RELIEF FAN W/ LOUVER CONTROL SCHEMATIC

(EF-6/L-1 & EF-7/L-2)

GENERAL:
THE HEAT RELIEF FAN UNIT SYSTEM CONSISTS OF MOTORIZED EXHAUST DAMPER, AN INLINE HEAT RELIEF FAN, AND A ZONE TEMPERATURE SENSOR. THE DDC CONTRACTOR SHALL PROVIDE A NEW DDC CONTROL PACKAGE DEDICATED TO THE COMPLETE OPERATION OF THE SYSTEM .

THE NEW SPACE TEMPERATURE SENSOR SHALL SIGNAL THE DDC CONTROLLER ITS TEMPERATURE AND THE TEMPERATURE OF THE COOLING SET POINT. THE SPACE TEMPERATURE SENSOR SHALL BE PROVIDED WITH A MANUAL OVERRIDE SWITCH TO START THE FAN AND OPEN THE DAMPERS.

HEAT RELIEF MODE OF OPERATION :
THE HEAT RELIEF SYSTEM SHALL BE ENABLED WHENEVER THE FOLLOWING CONDITIONS BOTH EXIST:

1. THE SPACE TEMPERATURE INCREASES ABOVE THE COOLING SET POINT.
2. THE OUTDOOR AIR TEMPERATURE IS BELOW THE COOLING SET POINT.

WHEN THE ABOVE CONDITIONS EXIST THE DDC CONTROLLER SHALL SEQUENCE THE FOLLOWING:

1. SEND AN OPEN COMMAND TO THE EXHAUST DAMPER.
   a. VALIDATE THE POSITION OF THE EXHAUST DAMPER THROUGH THE DAMPER END SWITCH.
      1) IF THE DAMPER FAILS TO OPEN, AN ALARM OF THE EVENT SHALL BE SENT TO THE OPERATOR'S WORKSTATION.
2. SEND AN ENABLE COMMAND TO THE HEAT RELIEF FAN TO RUN CONTINUOUSLY.
   a. VALIDATE THE STATUS OF THE FAN THROUGH THE CURRENT SENSING RELAY.
      1) IF THE FAN FAILS TO RUN, AN ALARM OF THE EVENT SHALL BE SENT TO THE OPERATOR'S WORKSTATION.

THE HEAT RELIEF MODE OF OPERATION SHALL BE DISABLED WHENEVER THE FOLLOWING CONDITION EXISTS:

1. THE SPACE TEMPERATURE REACHES 3°F BELOW THE COOLING SET POINT.

WHEN THE ABOVE CONDITION EXISTS THE DDC CONTROLLER SHALL SEQUENCE THE FOLLOWING:

1. SEND A DISABLE COMMAND TO THE HEAT RELIEF FAN.
   a. VALIDATE THE STATUS OF THE FAN THROUGH THE CURRENT SENSING RELAY.
      1) IF THE FAN FAILS TO DISABLE, AN ALARM OF THE EVENT SHALL BE SENT TO THE OPERATOR'S WORKSTATION.
2. SEND A CLOSE COMMAND TO THE EXHAUST DAMPER.
   a. VALIDATE THE POSITION OF THE EXHAUST DAMPER THROUGH THE DAMPER END SWITCH.
      1) IF THE DAMPER FAILS TO CLOSE, AN ALARM OF THE EVENT SHALL BE SENT TO THE OPERATOR'S WORKSTATION.

THE SPACE TEMPERATURE COOLING SET POINT SHALL BE SET AT 85°F (ADJUSTABLE).
THE HEAT RELIEF FAN SHALL HAVE A MINIMUM OPERATION TIME OF 5 MINUTES (ADJUSTABLE)

HEAT RELIEF FAN SEQUENCE OF OPERATION

(EF-5)

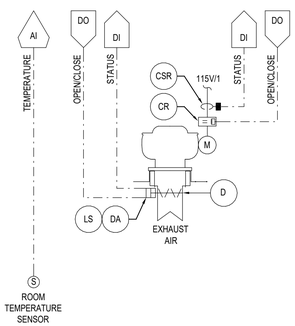

HEAT RELIEF FAN CONTROL SCHEMATIC

(EF-5)

GENERAL :
THE DUCTLESS SPLIT SYSTEM SHALL CONSIST OF AN INDOOR FAN COIL UNIT, AN OUTDOOR HEAT PUMP UNIT, AND A MANUFACTURER PROVIDED WIRED CONTROLLER.

THIS SYSTEM SHALL BE STANDALONE. THE CONTROL CONTRACTOR SHALL MONITOR SPACE TEMPERATURE AND PROVIDE AN ALARM IF IT GETS TOO WARM.

OPERATION :
THE WIRED CONTROLLER SHALL CONTROL THE OPERATION OF THE DUCTLESS SPLIT SYSTEM.

COOLING MODE OF OPERATION :
IF COOLING IS REQUIRED, THE WIRED CONTROLLER SHALL ENABLE THE COMPRESSORIZED COOLING SYSTEM TO MAINTAIN THE USER ADJUSTABLE COOLING SPACE SET POINT. IF THE SPACE IS BELOW THE COOLING SET POINT, THE DUCTLESS SPLIT SYSTEM SHALL BE DISABLED.

THE SPACE TEMPERATURE COOLING SET POINT SHALL BE SET AT 75°F (ADJUSTABLE).

THIS SYSTEM SHALL BE LOCKED OUT OF THE HEATING MODE.

SAFETIES/ALARMS :
1. THE SYSTEM SHALL BE DISABLED WHENEVER THE WATER LEVEL OVERFLOW SWITCH INDICATES A HIGH CONDENSATE LEVEL.
2. IF THE SPACE TEMPERATURE INCREASES TO 80°F (ADJUSTABLE), AN ALARM OF THE EVENT SHALL BE SENT TO THE OPERATOR'S WORKSTATION.

DUCTLESS SPLIT SYSTEM SEQUENCE OF OPERATION

(DFC-1/DCU-1)

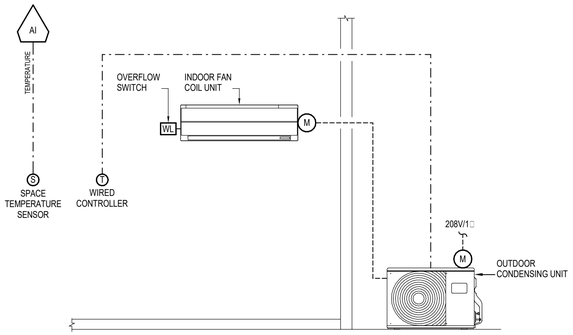

DUCTLESS SPLIT SYSTEM CONTROL SCHEMATIC

(DFC-1/DCU-1)

GENERAL :
ONE OUTSIDE AIR TEMPERATURE SENSOR SHALL BE INSTALLED ON THE NORTH SIDE OF THE BUILDING TO PROVIDE A CONTINUOUS READING OF THE OUTSIDE AIR TEMPERATURE.

OUTSIDE AIR TEMPERATURE SEQUENCE OF OPERATION

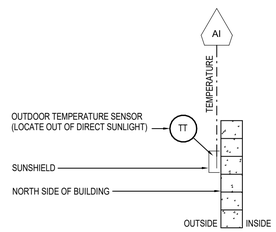

OUTSIDE AIR TEMPERATURE CONTROL SCHEMATIC

MILLER STAUFFER ARCHITECTS
601 E. FRONT AVE., STE 201
COEUR D' ALENE, IDAHO 83814
P 208.664.1773 F 208.667.3174
WWW.MILLERSTAUFFER.COM

MECHANICAL CONTROLS
BID SET
5/13/2024

D-1 Testing Laboratory
600 W Prairie Ave
Coeur d'Alene, ID 83814

LICENSED ARCHITECT AR-984931 MICHEAL P. WALKER STATE OF IDAHO

No.	Description	Date

PROJECT NUMBER 23239
PRINCIPAL Designer
PROJECT MANAGER Author

M6.0

5/14/2024 9:48:21 AM Autodesk Docs://ITD D-1 Laboratory/23239 ITD D1 Lab MEP_r23.rvt

GENERAL :
THE LABORATORY EXHAUST FAN SYSTEM SHALL CONSIST OF TWO FUME EXHAUST FANS WITH VARIABLE FREQUENCY DRIVES, A DUCT STATIC PRESSURE SENSOR, AN INLET PLENUM, AND A BYPASS DAMPERS. THE DDC CONTRACTOR SHALL PROVIDE A NEW DDC CONTROL PACKAGE DEDICATED TO THE COMPLETE OPERATION OF THE SYSTEM.

OPERATION :
THE FUME HOOD EXHAUST FANS SHALL RUN CONTINUOUSLY.

THE DDC CONTROLLER SHALL VARY THE SPEED OF THE VFD'S AND INLET BYPASS DAMPER ACTUATORS TO MAINTAIN FUME HOOD EXHAUST AIR DUCT NEGATIVE STATIC PRESSURE AND MINIMUM OUTLET VELOCITY.

STATIC PRESSURE SET POINT TOO HIGH

1. IF THE STATIC PRESSURE SET POINT IN THE SYSTEM IS TOO HIGH (DETECTED BY THE CONTROLLER), THE VFD WILL SLOW DOWN THE FAN(S) UNTIL THE STATIC PRESSURE SET POINT IS ACHIEVED. THE VFD SHALL MODULATE TO MAINTAIN THE FAN SPEED SET BY THE BALANCE CONTRACTOR.
   a. VALIDATE THE STATUS OF THE EXHAUST FANS THROUGH EACH VFD INTERFACE.
      1) IF EITHER FAN FAILS TO ENABLE, AN ALARM OF THE EVENT SHALL BE SENT TO THE OPERATOR'S WORKSTATION.

2. IF THE PRESSURE IS STILL TOO HIGH IN THE PLENUM AND THE MINIMUM PROGRAMMED VFD SPEED HAS BEEN REACHED, THE BYPASS DAMPER WILL OPEN TO ACHIEVE PRESSURE SET POINT.
   a. VALIDATE THE POSITION OF THE BYPASS DAMPER THROUGH THE END SWITCH.
      1) IF THE BYPASS DAMPER FAILS TO OPEN, AN ALARM OF THE EVENT SHALL BE SENT TO THE OPERATOR'S WORKSTATION.

STATIC PRESSURE SET POINT TOO LOW

1. IF THE PRESSURE IN THE PLENUM IS TOO LOW (DETECTED BY THE CONTROLLER), THE BYPASS DAMPER WILL CLOSE UNTIL STATIC PRESSURE SET POINT IS REACHED.
   a. VALIDATE THE POSITION OF THE BYPASS DAMPER THROUGH THE END SWITCH.
      1) IF THE BYPASS DAMPER FAILS TO OPEN, AN ALARM OF THE EVENT SHALL BE SENT TO THE OPERATOR'S WORKSTATION

2. IF THE STATIC PRESSURE SET POINT IN THE SYSTEM IS STILL TOO LOW, THE VFD WILL SPEED UP THE FAN(S) UNTIL THE STATIC PRESSURE SET POINT IS REACHED. THE VFD SHALL MODULATE TO MAINTAIN THE FAN SPEED SET BY THE BALANCE CONTRACTOR.
   a. VALIDATE THE STATUS OF THE EXHAUST FANS THROUGH EACH VFD INTERFACE.
      1) IF EITHER FAN FAILS TO ENABLE, AN ALARM OF THE EVENT SHALL BE SENT TO THE OPERATOR'S WORKSTATION.

THE FUME EXHAUST FANS AND CONTROL PANEL SHALL BE MONITORED AT THE CENTRAL OPERATOR'S WORKSTATION FOR ALL FAN/CONTROL PANEL STATUS AND ALARMS.

SAFETIES:

1. IF THE FIRE ALARM OR OTHER ALARMS ARE ACTIVATED WHERE THE AIR HANDLERS ARE SHUT-DOWN ON EMERGENCY SHUT-DOWN, THE FUME EXHAUST SYSTEM SHALL BE SET TO EMERGENCY MODE WHERE FUME EXHAUST SYSTEM MIXED AIR DAMPERS CLOSE, FUME EXHAUST FAN #2 IS STOPPED AND FUME EXHAUST FAN #1 RUNNING SPEED SHALL BE RESET 50% OF VFD SPEED. THE ALARM SHALL BE MANUALLY RESET. AN ALARM OF THE EVENT SHALL BE SENT TO THE OPERATORS WORKSTATION.

2. IF THE STATIC PRESSURE SET POINT IS NOT MAINTAINED (TOO HIGH OR TOO LOW) FOR 5 MINUTES (ADJUSTABLE), AN ALARM OF THE EVENT SHALL BE SENT TO THE OPERATOR'S WORKSTATION

VFD POINTS

1. SPEED (HZ)
2. STATUS
3. ENABLE / DISABLE
4. ALARMS

LAB EXHAUST SYSTEM SEQUENCE OF OPERATION

(LEF-1)

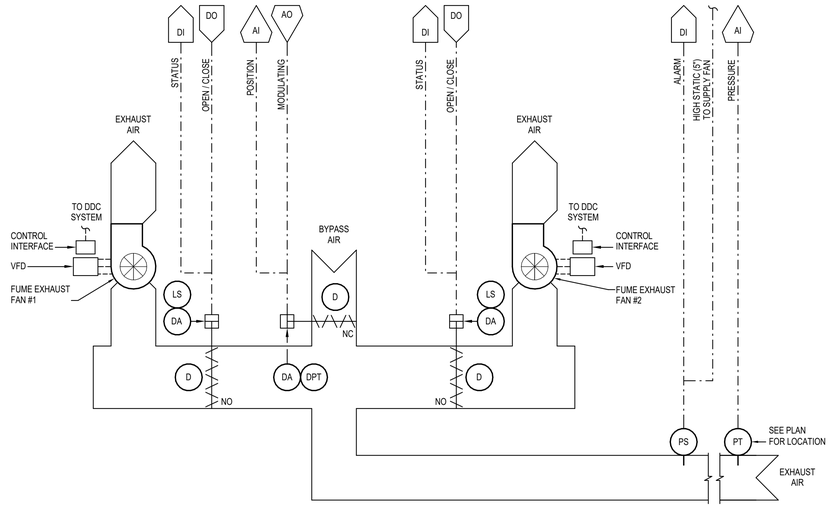

LAB EXHAUST SYSTEM CONTROL SCHEMATIC

(LEF-1)

GENERAL :
THE SPLIT SYSTEM CONSISTS OF A SUPPLY FAN, A DX COOLING COIL, A GAS-FIRED HEATING COIL, A MOTORIZED OUTSIDE AIR DAMPER, AND A SPACE TEMPERATURE SENSOR. THE CONTROL CONTRACTOR SHALL PROVIDE A NEW DDC CONTROL PACKAGE DEDICATED TO THE OPERATION OF THIS SYSTEM.

OPERATION :
THE SUPPLY FAN SHALL START AND STOP ON THE MASTER WEEKLY AND HOLIDAY SCHEDULE.

THE NEW SPACE TEMPERATURE SENSOR SHALL SIGNAL THE DDC CONTROLLER ITS TEMPERATURE AND THE TEMPERATURE OF THE HEATING AND COOLING SET POINTS. THE TEMPERATURE SENSORS SHALL BE PROVIDED WITH AN OCCUPANT ADJUSTABILITY OF +/- 1°F (ADJUSTABLE).

THE NEW DDC CONTROLLER SHALL BE CAPABLE OF BEING MANUALLY RESET TO THE OCCUPIED MODE FOR A 2-HOUR TIME PERIOD (ADJUSTABLE) UPON A SIGNAL FROM AN OVERRIDE BUTTON LOCATED ON THE TEMPERATURE SENSOR.

MORNING WARM-UP / COOLDOWN :
MORNING WARM-UP / COOLDOWN SHALL BE CONTROLLED BY AN OPTIMUM START / STOP MODE PROVIDED BY THE DDC CONTROLLER THAT AIDS IN THE REDUCTION OF ENERGY COSTS DURING A BUILDING'S TRANSITION FROM UNOCCUPIED TO OCCUPIED OR OCCUPIED TO UNOCCUPIED. THIS SCENARIO IS ACCOMPLISHED BY TURNING ON THE PRE-HEATING / PRE-COOLING AS LATE AS POSSIBLE TO REACH COMFORT LEVELS PRIOR TO OCCUPANCY AND TURNING OFF THE HEATING / COOLING AS EARLY AS POSSIBLE WHILE STILL MAINTAINING OCCUPIED ZONE COMFORT UNTIL THE ZONE IS VACANT.

THE DDC CONTROLLER OPTIMUM START / STOP MODE SHALL CONTINUOUSLY MONITOR, CALCULATE AND ADJUST THE FOLLOWING VARIABLES IN ORDER TO DETERMINE THE OPTIMAL START / STOP TIMES:

1. OUTSIDE AIR TEMPERATURE.
2. RATE OF WARM-UP / COOL-DOWN IN EACH ZONE AFTER EQUIPMENT START-UP.
3. TEMPERATURE DIFFERENCE BETWEEN THE ZONE TEMPERATURE AND THE HEATING / COOLING SET POINTS.
4. AMOUNT OF TIME REQUIRED TO RAISE OR LOWER THE ZONE TEMPERATURE 1°F.
5. THE OUTSIDE AIR DAMPER SHALL REMAIN CLOSED DURING THE WARM-UP MODE.

OCCUPIED MODE :
WHEN THE UNIT IS SCHEDULED ON THE DDC CONTROLLER SHALL SEQUENCE THE FOLLOWING:

1. SEND AN ENABLE COMMAND TO THE SUPPLY FAN TO RUN CONTINUOUSLY.
   a. VALIDATE THE STATUS OF THE SUPPLY FAN THROUGH THE CURRENT SENSING RELAY.
      1) IF THE SUPPLY FAN FAILS TO START, AN ALARM OF THE EVENT SHALL BE SENT TO THE OPERATOR'S WORKSTATION.

2. SEND AN OPEN COMMAND TO THE OUTSIDE AIR DAMPER.
   a. VALIDATE THE POSITION OF THE DAMPER THROUGH THE END SWITCH.
      1) IF THE DAMPER FAILS TO OPEN, AN ALARM OF THE EVENT SHALL BE SENT TO THE OPERATOR'S WORKSTATION.

THE OCCUPIED MODE SPACE TEMPERATURE HEATING SET POINT SHALL BE SET AT 70°F (ADJUSTABLE).
THE OCCUPIED MODE SPACE TEMPERATURE COOLING SET POINT SHALL BE SET AT 75°F (ADJUSTABLE).

HEATING MODE OF OPERATION :
THE HEATING MODE OF OPERATION SHALL BE ENABLED WHENEVER THE FOLLOWING CONDITION EXISTS:

1. THE SPACE TEMPERATURE DECREASES BELOW THE SPACE TEMPERATURE HEATING SET POINT.

WHEN THE ABOVE CONDITION IS MET, THE DDC CONTROLLER SHALL SEQUENCE THE FOLLOWING:

1. SEND AN ENABLE COMMAND TO THE GAS-FIRED HEATING COIL.
   a. IF THE SPACE IS CALLING FOR HEAT AND THE SUPPLY AIR TEMPERATURE FAILS TO INCREASE BY 5°F (ADJUSTABLE) AFTER 5 MINUTES (ADJUSTABLE), AN ALARM OF THE EVENT SHALL BE SENT TO THE OPERATOR'S WORKSTATION.

COOLING MODE OF OPERATION :
THE COOLING MODE OF OPERATION SHALL BE ENABLED WHENEVER THE FOLLOWING CONDITION EXISTS:

1. THE SPACE TEMPERATURE INCREASES ABOVE THE SPACE TEMPERATURE COOLING SET POINT.

WHEN THE ABOVE CONDITION IS MET, THE DDC CONTROLLER SHALL SEQUENCE THE FOLLOWING:

1. SEND AN ENABLE COMMAND TO THE CONDENSING UNIT COMPRESSOR.
   a. IF THE SPACE IS CALLING FOR COOLING AND THE SUPPLY AIR TEMPERATURE FAILS TO REDUCE BY 5°F (ADJUSTABLE) AFTER 5 MINUTES (ADJUSTABLE), AN ALARM OF THE EVENT SHALL BE SENT TO THE OPERATOR'S WORKSTATION.

UNOCCUPIED MODE:
THE SUPPLY FAN SHALL CYCLE ON A CALL FOR HEATING OR COOLING AND SHALL BE OFF OTHERWISE.

1. SEND A DISABLE COMMAND TO THE SUPPLY FAN.
   a. IF THE SUPPLY FAN FAILS TO DISABLE, AN ALARM OF THE EVENT SHALL BE SENT TO THE OPERATOR'S WORKSTATION.

2. SEND A CLOSE COMMAND TO THE OUTSIDE AIR DAMPER.
   a. IF THE DAMPER FAILS TO CLOSE, AN ALARM OF THE EVENT SHALL BE SENT TO THE OPERATOR'S WORKSTATION.

THE UNOCCUPIED MODE SPACE TEMPERATURE HEATING SET POINT SHALL BE SET AT 55°F (ADJUSTABLE).
THE UNOCCUPIED MODE SPACE TEMPERATURE COOLING SET POINT SHALL BE SET AT 85°F (ADJUSTABLE).

SAFETIES :
ALL AVAILABLE ALARMS SHALL BE SENT TO THE OPERATOR'S WORKSTATION.

THE BUILDING AUTOMATION SYSTEM SHALL BE ABLE TO REMOTELY RESET THE SPLIT SYSTEM OF ALL ALARMS AND RESTART FROM THE OPERATOR'S WORKSTATION WITHOUT PHYSICALLY TURNING ON AND OFF THE DISCONNECT.

THE COMPRESSOR WILL NOT BE ALLOWED TO OPERATE UNLESS FAN STATUS IS PROVEN.

A DRAIN PAN OVERFLOW SENSOR SHALL SEND AN ALARM THE WORKSTATION AND SHUT DOWN THE SPLIT SYSTEM IF WATER IS DETECTED.

SPLIT SYSTEM SEQUENCE OF OPERATION

(F-1 / CU-1)

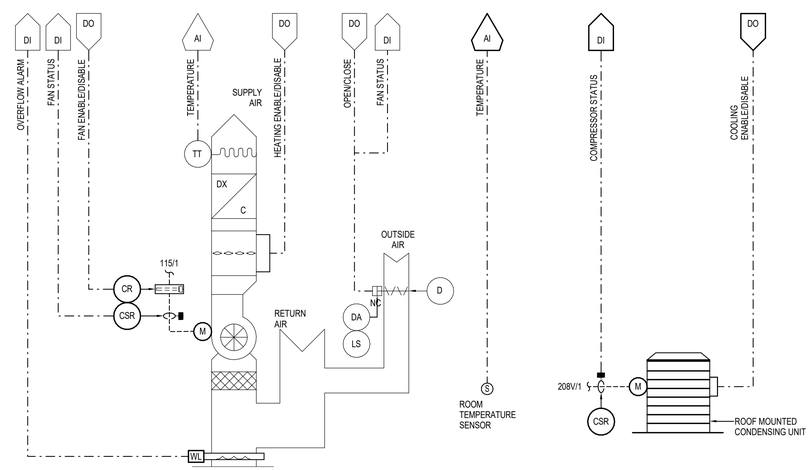

SPLIT SYSTEM CONTROL SCHEMATIC

(F-1 / CU-1)

MUSGROVE ENGINEERING, P.A.
234 S. Whispertwood Way
Boise, ID 83709
208.384.0585
645 West 25th Street
Idaho Falls, ID 83402
208.523.2862
www.musgrovepa.com

Project No. 23-239

PROFESSIONAL ENGINEER
LICENSED
16683
5/14/2024
STATE OF IDAHO
CHRISTOPHER DYKE

MILLER STAUFFER ARCHITECTS
601 E. FRONT AVE., STE 201
COEUR D' ALENE, IDAHO 83814
P 208.664.1773 F 208.667.3174
WWW.MILLERSTAUFFER.COM

MECHANICAL CONTROLS

BID SET
5/13/2024

D-1 Testing Laboratory
600 W Prairie Ave
Coeur d'Alene, ID 83814

LICENSED ARCHITECT
AR-984031
MICHEAL P. WALKER
STATE OF IDAHO

No.	Description	Date

PROJECT NUMBER 23239
PRINCIPAL Designer
PROJECT MANAGER Author

M6.1

5/14/2024 9:48:21 AM Autodesk Docs://ITD D-1 Laboratory/23239 ITD D1 Lab MEP_r23.rvt

MUSGROVE
ENGINEERING, P.A.
234 S. Whisperwood Way
Boise, ID 83709
208.384.0585
645 West 25th Street
Idaho Falls, ID 83402
208.523.2862
www.musgroveepa.com
Project No. 23-239

PROFESSIONAL ENGINEER
LICENSED
16683
5/14/2024
STATE OF IDAHO
CHRISTOPHER DYKE

MILLER STAUFFER ARCHITECTS
601 E. FRONT AVE., STE 201
COEUR D' ALENE, IDAHO 83814
P 208.664.1773 F 208.667.3174
WWW.MILLERSTAUFFER.COM

GENERAL :
THE HOT WATER HEATING SYSTEM SHALL CONSIST OF (2) HOT WATER BOILERS (LEAD / LAG OPERATION), (2) BOILER PUMPS, (2) HEATING WATER PUMPS W/ VFDS (LEAD / STANDBY OPERATION), A FLOW METER, AND A BACNET INTERFACE. THE CONTROL CONTRACTOR SHALL PROVIDE A NEW DDC CONTROL PACKAGE DEDICATED TO THE COMPLETE OPERATION OF THE SYSTEM.

ALL PARAMETERS SHALL BE REMOTELY ADJUSTABLE FROM THE BUILDING AUTOMATION SYSTEM.

THE HEATING ENABLE SET POINT SHALL BE SET AT 70°F (ADJUSTABLE).

OPERATION:
THE HEATING WATER SYSTEM SHALL BE ENABLED WHENEVER THE FOLLOWING CONDITION EXISTS:

1. THE OUTSIDE AIR TEMPERATURE DECREASES TO THE HEATING ENABLE SET POINT FOR A PERIOD OF 10 CONSECUTIVE MINUTES (ADJUSTABLE)

2. THERE IS A CALL FOR HEAT FROM A SINGLE ZONE (BASED ON A HEATING COIL CONTROL VALVE MINIMUM POSITION OF 100% OPEN - ADJUSTABLE) FOR A PERIOD OF 30 CONSECUTIVE SECONDS (ADJUSTABLE).

WHEN THE ABOVE CONDITIONS ARE MET, THE DDC CONTROLLER SHALL SEQUENCE THE FOLLOWING:

1. SEND AN ENABLE COMMAND TO THE LEAD HEATING WATER PUMP.
   a. VALIDATE THE RUNNING STATUS THROUGH THE VFD CONTROL INTERFACE.
   b. THE RUNNING STATUS THROUGH THE CURRENT SENSING RELAY.
      1) IF THE LEAD PUMP FAILS TO START, THE LAG PUMP SHALL BE ENABLED.
      2) IF EITHER PUMP FAILS TO START, AN ALARM OF THE EVENT SHALL BE SENT TO THE OPERATOR'S WORKSTATION.
   c. THE DDC CONTROLLER SHALL MODULATE THE VFD TO MAINTAIN ALL THE DIFFERENTIAL PRESSURE SET POINTS (ADJUSTABLE) LOCATED ACROSS THE PIPING ASSEMBLIES. THE SET POINT PRESSURES SHALL BE COORDINATED BETWEEN THE T&B CONTRACTOR AND CONTROL CONTRACTOR AND SHALL BE SUFFICIENT ENOUGH TO ALLOW ADEQUATE FLOW TO ALL HOT WATER HEATING COILS. DURING THIS PROCESS, THE HEATING WATER BYPASS CONTROL VALVE SHALL REMAIN CLOSED.

NOTE:
THE DDC CONTROLLER SHALL PROVIDE A SLOW RAMP UP TIME (ADJUSTABLE) WHEN THE LEAD HEATING WATER PUMP IS FIRST ENABLED TO AVOID OVER PRESSURIZING THE HEATING WATER SYSTEM.

2. SEND AN ENABLE COMMAND TO THE BOILER SYSTEM'S UNIT CONTROLLER.
   a. VALIDATE THE RUNNING STATUS THROUGH THE CONTROLLER.
      1) IF ANY COMPONENT OF THE BOILER SYSTEM FAILS TO ENABLE, AN ALARM OF THE EVENT SHALL BE SENT TO THE OPERATOR'S WORKSTATION.
   b. EACH BOILER SHALL ENABLE THE RESPECTIVE BOILER PUMP BEFORE FIRING THE BOILER.
      1) VALIDATE THE STATUS OF THE PUMP THROUGH THE CURRENT SENSING RELAY.
      2) IF EITHER BOILER PUMP FAILS TO START, THE BOILER SHALL NOT ENABLE, AND AN ALARM OF THE EVENT SHALL BE SENT TO THE OPERATOR'S WORKSTATION.

WHEN A RUNNING STATUS FROM THE BOILER UNIT CONTROL PANEL (UCP) HAS BEEN CONFIRMED, THE BOILERS SHALL CONTINUE TO OPERATE UNDER THEIR OWN INTERNAL CONTROLS BY PROVIDING LEAD / LAG SEQUENCING AND ADJUSTING THEIR OWN RAMPING AND LOADING RATES. THE DDC CONTROLLER SHALL SEND THE UNIT CONTROL PANEL (UCP) A HEATING WATER SUPPLY TEMPERATURE SET POINT TO MAINTAIN (REFER TO THE HEATING WATER SUPPLY TEMPERATURE SET POINT RESET SCHEDULE).

THE HEATING WATER SYSTEM SHALL BE DISABLED WHENEVER THE FOLLOWING CONDITION EXISTS:

1. THE OUTSIDE AIR TEMPERATURE INCREASES ABOVE THE HEATING ENABLE SET POINT FOR A PERIOD OF 10 CONSECUTIVE MINUTES (ADJUSTABLE)

2. NO ZONES HAVE A CALL FOR HEAT (BASED ON A HEATING COIL CONTROL VALVE POSITION OF 0% OPEN - ADJUSTABLE) FOR A PERIOD OF 10 CONSECUTIVE MINUTES (ADJUSTABLE).

WHEN THE ABOVE CONDITION IS MET, THE DDC CONTROLLER SHALL SEQUENCE THE FOLLOWING:

1. SEND A DISABLE COMMAND TO THE BOILER SYSTEM'S UNIT CONTROLLER.
   a. VALIDATE THE RUNNING STATUS THROUGH THE CONTROLLER.
      1) IF ANY COMPONENT OF THE BOILER SYSTEM FAILS TO DISABLE, AN ALARM OF THE EVENT SHALL BE SENT TO THE OPERATOR'S WORKSTATION.

2. EACH BOILER SHALL DISABLE THE RESPECTIVE BOILER PUMP.
   a. VALIDATE THE STATUS OF THE PUMP THROUGH THE CURRENT SENSING RELAY.
      1) IF THE BOILER PUMP FAILS TO STOP, AN ALARM OF THE EVENT SHALL BE SENT TO THE OPERATOR'S WORKSTATION.

THE BOILER SYSTEM'S CONTROLLER SHALL PROVIDE LEAD / LAG CONTROL AS WELL AS AN AUTOMATIC ROTATION OF THE LEAD BOILER BASED ON AN OPTIMIZED ALGORITHM. IN ADDITION, MANUAL OVERRIDE AND OPERATOR OVERRIDE CAPABILITIES SHALL ALSO BE PROVIDED.

THE DDC CONTROLLER SHALL PROVIDE LEAD / LAG CONTROL OF THE HEATING WATER PUMPS. IT SHALL INCLUDE AN AUTOMATIC ROTATION OF THE LEAD PUMP BASED ON THE MONTH. THE EVEN NUMBERED PUMP SHALL BE THE LEAD ON EVEN NUMBERED MONTHS AND THE ODD NUMBERED PUMP SHALL BE THE LEAD ON ODD NUMBERED MONTHS. IN ADDITION, MANUAL OVERRIDE AND OPERATOR OVERRIDE CAPABILITIES SHALL ALSO BE PROVIDED.

HEATING WATER SUPPLY TEMPERATURE SET POINT RESET SCHEDULE :
THE HEATING WATER SUPPLY TEMPERATURE SET POINT SHALL BE RESET BY THE DDC CONTROLLER BASED ON THE OUTSIDE AIR TEMPERATURE AS FOLLOWS:

OUTSIDE AIR TEMPERATURE	SUPPLY WATER TEMPERATURE SET POINT
<=30°F (ADJUSTABLE)	140°F (ADJUSTABLE)
>=60°F (ADJUSTABLE)	100°F (ADJUSTABLE)

HEATING WATER BYPASS CONTROL VALVE (LOW FLOW CONTROL MODE):
THE HEATING WATER BYPASS CONTROL VALVE SHALL BE ENABLED WHENEVER ONE OF THE FOLLOWING CONDITIONS EXISTS:

1. THE HEATING WATER PUMPS ARE FIRST ENABLED.

OR

2. THE FLOW METER MEASURES A HEATING WATER FLOW THAT IS CLOSE TO THE LEAD HEATING WATER PUMP'S MINIMUM FLOW. THE MINIMUM FLOW SHALL BE COORDINATED BETWEEN THE T&B CONTRACTOR AND THE CONTROL CONTRACTOR AND SHALL PREVENT THE PUMPS FROM SURGING.

WHEN ONE OF THE ABOVE CONDITIONS IS MET, THE DDC CONTROLLER SHALL SEQUENCE THE FOLLOWING:

1. SEND AN ENABLE COMMAND TO THE BYPASS CONTROL VALVE.
   a. VALIDATE THE POSITION THROUGH THE VALVE POSITION TRANSMITTER.
      1) IF THE VALVE FAILS TO OPEN, AN ALARM OF THE EVENT SHALL BE SENT TO THE OPERATOR'S WORKSTATION.
   b. THE DDC CONTROLLER SHALL MODULATE THE VALVE TO MAINTAIN A FLOW RATE THAT IS SLIGHTLY ABOVE THE MINIMUM FLOW RATE OF THE LEAD PRIMARY HEATING WATER PUMP.

SAFETIES:
REFER TO THE ELECTRICAL DRAWINGS FOR THE REQUIREMENTS OF THE EMERGENCY SHUT-DOWN SWITCH.

BOILER POINTS LIST :
ALL AVAILABLE BOILER POINTS SHALL BE MAPPED TO THE OPERATOR'S WORKSTATION. POINTS SHALL INCLUDE BUT NOT BE LIMITED TO THE FOLLOWING:

1. STATUS.
2. ALARM.
3. CAPACITY FEEDBACK.
4. FIRING RATE.
5. SET POINT.

VFD POINTS LIST :
THE VFD CONTROL INTERFACE SHALL PROVIDE BUT NOT BE LIMITED TO THE FOLLOWING:
1. ENABLE/DISABLE.
2. STATUS.
3. SPEED CONTROL.
4. ALARMS.

HEATING WATER SYSTEM SEQUENCE OF OPERATION

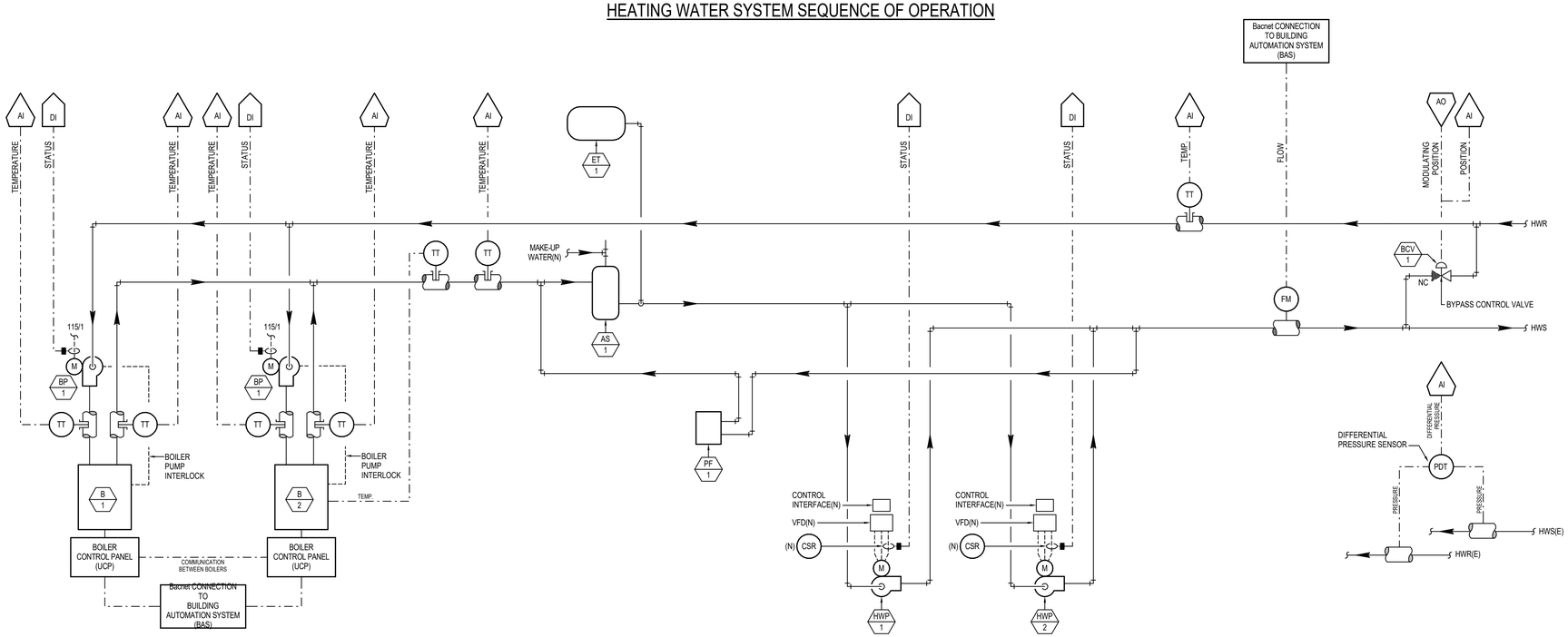

HEATING WATER SYSTEM CONTROL SCHEMATIC

MECHANICAL CONTROLS
BID SET
5/13/2024

D-1 Testing Laboratory
600 W Prairie Ave
Coeur d'Alene, ID 83814

LICENSED ARCHITECT
AR-984931
MICHEAL P. WALKER
STATE OF IDAHO

No.	Description	Date

PROJECT NUMBER 23239
PRINCIPAL Designer
PROJECT MANAGER Author

M6.2

5/14/2024 9:48:21 AM Autodesk Docs://ITD D-1 Laboratory/23239 ITD D1 Lab MEP_r23.rvt

MUSGROVE
ENGINEERING, P.A.
234 S. Whisperwood Way
Boise, ID 83709
208.384.0585
645 West 25th Street
Idaho Falls, ID 83402
208.523.2862
www.musgroveepa.com
Project No. 23-239

PROFESSIONAL ENGINEER
LICENSED
Christopher D. Dyke
16683
5/14/2024
STATE OF IDAHO
CHRISTOPHER DYKE

GENERAL :
THE AIR HANDLING UNIT W/ VARIABLE AIR VOLUME (VAV) CONTROL SHALL CONSIST OF AN OUTSIDE AIR INTAKE W/ MODULATING DAMPERS, VARIABLE SPEED SUPPLY FANS, A GAS-FIRED HEATING COIL, A VARIABLE SPEED DX COOLING/DEHUMIDIFICATION COIL, A STEAM HUMIDIFICATION MANIFOLD, A GAS-FIRED STEAM HUMIDIFIER, AND A BACNET CONTROLLER. THE CONTROL CONTRACTOR SHALL PROVIDE A NEW DDC CONTROL PACKAGE DEDICATED TO THE COMPLETE OPERATION OF THE UNIT.

THE AIR HANDLING UNIT SHALL OPERATE CONTINUOUSLY BASED ON THE MASTER OCCUPIED/UNOCCUPIED SCHEDULE .

MORNING WARM-UP / COOL-DOWN :
MORNING WARM-UP / COOL-DOWN SHALL BE CONTROLLED BY AN OPTIMUM START / STOP MODE PROVIDED BY THE DDC CONTROLLER THAT AIDS IN THE REDUCTION OF ENERGY COSTS DURING A BUILDING'S TRANSITION FROM UNOCCUPIED TO OCCUPIED OR VICE VERSA. THIS SCENARIO IS ACCOMPLISHED BY TURNING ON THE PRE-HEATING / PRE-COOLING AS LATE AS POSSIBLE TO REACH COMFORT LEVELS PRIOR TO OCCUPANCY AND TURNING OFF THE HEATING / COOLING AS EARLY AS POSSIBLE WHILE MAINTAINING OCCUPIED ZONE COMFORT UNTIL THE ZONE IS VACANT.

THE DDC CONTROLLER OPTIMUM START / STOP MODE SHALL CONTINUOUSLY MONITOR, CALCULATE, AND ADJUST THE FOLLOWING VARIABLES IN ORDER TO DETERMINE THE OPTIMAL START / STOP TIMES:

1. OUTSIDE AIR TEMPERATURE
2. OPTIMUM ECONOMIZER POSITION (COOL-DOWN).
3. RATE OF WARM-UP / COOL-DOWN IN EACH ZONE AFTER EQUIPMENT START-UP.
4. TEMPERATURE DIFFERENCE BETWEEN THE ZONE TEMPERATURE AND THE HEATING / COOLING SET POINTS.
5. AMOUNT OF TIME REQUIRED TO RAISE OR LOWER THE ZONE TEMPERATURE 1°F.

OPERATION :
THE DDC CONTROLLER SHALL SEQUENCE THE FOLLOWING:

1. SEND AN ENABLE COMMAND TO THE OUTSIDE AIR DAMPERS.
   a. THE DAMPERS SHALL MODULATE TO PROVIDE THE MINIMUM AMOUNT OF OUTSIDE AIRFLOW (AS INDICATED IN THE AIR HANDLING UNIT SCHEDULE - SET BY BALANCE CONTRACTOR).
   b. VALIDATE THE POSITION THROUGH THE DAMPER POSITION TRANSMITTER.
      1) IF THE DAMPERS FAIL TO PROVIDE THE MINIMUM AMOUNT OF OUTSIDE AIR, AN ALARM OF THE EVENT SHALL BE SENT TO THE OPERATOR'S WORKSTATION.
2. SEND AN ENABLE COMMAND TO THE SUPPLY FAN SYSTEM.
   a. VALIDATE THE RUNNING STATUS THROUGH THE ADJUSTABLE CURRENT SENSING RELAYS.
      1) IF ANY FAN FAILS TO START, AN ALARM OF THE EVENT SHALL BE SENT TO THE OPERATOR'S WORKSTATION.
   b. THE DDC CONTROLLER SHALL MODULATE THE FANS TO MAINTAIN THE DUCT STATIC PRESSURE SET POINT (REFER TO THE DUCT STATIC PRESSURE RESET SCHEDULE).

COOLING MODE OF OPERATION (DX COOLING) :
THE DX COOLING MODE OF OPERATION SHALL BE ENABLED WHENEVER THE FOLLOWING CONDITION EXISTS:

1. THE SUPPLY AIR TEMPERATURE INCREASES 2°F ABOVE THE SUPPLY AIR TEMPERATURE SET POINT.

WHEN THE ABOVE CONDITIONS ARE MET THE DDC CONTROLLER SHALL SEQUENCE THE FOLLOWING:

1. SEND AN ENABLE COMMAND TO THE DX COOLING SYSTEM (COMPRESSORS / CONDENSER FANS).
   a. VALIDATE THE RUNNING STATUS THROUGH A TEMPERATURE DECREASE OF 5°F (ADJUSTABLE) IN THE SUPPLY AIR TEMPERATURE
      1) IF A TEMPERATURE DECREASE CANNOT BE DETECTED FOR A PERIOD OF 2 CONSECUTIVE MINUTES (ADJUSTABLE), AN ALARM OF THE EVENT SHALL BE SENT TO THE OPERATOR'S WORKSTATION
   b. THE UNIT'S CONTROLLER SHALL CONTINUOUSLY MODULATE THE INVERTER COMPRESSORS TO MAINTAIN THE SUPPLY AIR COOLING SET POINT.

THE COOLING MODE OF OPERATION SHALL BE DISABLED WHENEVER THE FOLLOWING CONDITION EXISTS:

1. THE SUPPLY AIR TEMPERATURE DECREASES 1°F (ADJUSTABLE) BELOW THE SUPPLY AIR COOLING SET POINT FOR A PERIOD OF 30 CONSECUTIVE SECONDS (ADJUSTABLE).

WHEN THE ABOVE CONDITION IS MET THE DDC CONTROLLER SHALL SEQUENCE THE FOLLOWING:

1. SEND A DISABLE COMMAND TO THE DX COOLING SYSTEM (COMPRESSORS / CONDENSER FANS).
   a. VALIDATE THE RUNNING STATUS THROUGH A TEMPERATURE INCREASE OF 5°F (ADJUSTABLE) IN THE SUPPLY AIR TEMPERATURE
      1) IF A TEMPERATURE INCREASE CANNOT BE DETECTED FOR A PERIOD OF 2 CONSECUTIVE MINUTES (ADJUSTABLE), AN ALARM OF THE EVENT SHALL BE SENT TO THE OPERATOR'S WORKSTATION

HEATING MODE OF OPERATION (GAS-FIRED) :
THE HEATING MODE OF OPERATION (GAS-FIRED) SHALL BE ENABLED WHENEVER THE FOLLOWING CONDITION EXISTS:

1. THE SPACE TEMPERATURE DECREASES 1°F (ADJUSTABLE) BELOW THE SPACE TEMPERATURE HEATING SET POINT.

WHEN THE ABOVE CONDITION IS MET THE DDC CONTROLLER SHALL SEQUENCE THE FOLLOWING:

HEATING MODE OF OPERATION (GAS-FIRED) :
THE HEATING MODE OF OPERATION (GAS-FIRED) SHALL BE ENABLED WHENEVER THE FOLLOWING CONDITION EXISTS:

1. THE DISCHARGE AIR TEMPERATURE DECREASES 2°F BELOW THE SUPPLY AIR TEMPERATURE SET POINT FOR A PERIOD OF 30 CONSECUTIVE SECONDS.

WHEN THE ABOVE CONDITION IS MET, THE DDC CONTROLLER SHALL SEQUENCE THE FOLLOWING:

1. SEND AN ENABLE COMMAND TO THE GAS-FIRED HEATING COIL.
   a. THE MODULATING HEAT CONTROL VALVE SHALL CONTINUOUSLY MODULATE AS REQUIRED TO MAINTAIN THE SUPPLY AIR TEMPERATURE SET POINT.
   b. VALIDATE THE STATUS OF THE GAS-FIRED HEATING COIL THROUGH THE SUPPLY AIR TEMPERATURE SET POINT.
      1) IF THE SUPPLY AIR TEMPERATURE DOES NOT RISE 2°F (ADJUSTABLE), AN ALARM OF THE EVENT SHALL BE SENT TO THE OPERATOR'S WORKSTATION.

THE HEATING MODE OF OPERATION SHALL BE DISABLED WHENEVER THE FOLLOWING CONDITION EXISTS:

1. THE SUPPLY AIR TEMPERATURE INCREASES 1°F ABOVE THE SUPPLY AIR TEMPERATURE SET POINT (AS INDICATED IN THE SUPPLY AIR TEMPERATURE RESET SCHEDULE) FOR A PERIOD OF 30 CONSECUTIVE SECONDS.

WHEN THE ABOVE CONDITION IS MET, THE DDC CONTROLLER SHALL SEQUENCE THE FOLLOWING:

1. SEND A DISABLE COMMAND TO THE GAS-FIRED HEATING COIL.
   a. VALIDATE THE STATUS OF THE GAS-FIRED HEATING COIL THROUGH THE SUPPLY AIR TEMPERATURE SET POINT.
      1) 1) IF THE SUPPLY AIR TEMPERATURE DOES NOT REDUCE 2°F (ADJUSTABLE), AN ALARM OF THE EVENT SHALL BE SENT TO THE OPERATOR'S WORKSTATION.

SUPPLY AIR TEMPERATURE RESET SCHEDULE :
THE SUPPLY AIR TEMPERATURE SET POINT SHALL BE RESET BY THE DDC CONTROLLER BASED ON THE POSITION OF THE HOT WATER REHEAT CONTROL VALVES. WHEN THE SYSTEM IS FIRST ENABLED A MINIMUM SUPPLY AIR TEMPERATURE SET POINT OF 55°F (ADJUSTABLE) SHALL BE PROVIDED AND SHALL INCREASE LINEARLY (BASED ON 1°F INTERVALS - ADJUSTABLE W/ A 30 SECOND TIME DELAY - ADJUSTABLE) UP TO 65°F (ADJUSTABLE) AS LONG AS ALL HOT WATER REHEAT CONTROL VALVES ARE AT A POSITION OF 20% OPEN (ADJUSTABLE) OR MORE. AS ONE OR MORE HOT WATER REHEAT CONTROL VALVES MODULATE TO A POSITION OF 0% OPEN (ADJUSTABLE), THE REVERSE CYCLE SHALL OCCUR.

THE SUPPLY AIR TEMPERATURE SET POINT SHALL AUTOMATICALLY RESET TO THE MINIMUM SUPPLY AIR TEMPERATURE WHENEVER ONE OR MORE SPACE TEMPERATURES INCREASE 2°F (ADJUSTABLE) ABOVE THEIR RESPECTIVE SPACE TEMPERATURE SET POINT FOR A PERIOD OF 30 CONSECUTIVE SECONDS (ADJUSTABLE).

DUCT STATIC PRESSURE RESET SCHEDULE :
THE DUCT STATIC PRESSURE SHALL BE RESET BY THE DDC CONTROLLER BASED ON AIRFLOW DEMAND OF THE SUPPLY AIR VALVES. THE DUCT STATIC PRESSURE SET POINT SHALL INCREASE AS THE DEMAND FOR SUPPLY AIR INCREASES. THE DUCT STATIC PRESSURE SET POINT SHALL DECREASE AS THE DEMAND FOR SUPPLY AIR DECREASES.

HUMIDIFICATION MODE OF OPERATION :
THE HUMIDIFICATION MODE OF OPERATION SHALL BE ENABLED WHENEVER THE FOLLOWING CONDITION EXISTS:

1. ANY SPACE RELATIVE HUMIDITY DECREASES 1% (ADJUSTABLE) BELOW THE RELATIVE HUMIDITY LOW LIMIT SET POINT FOR A PERIOD OF 30 CONSECUTIVE SECONDS (ADJUSTABLE).

WHEN THE ABOVE CONDITION IS MET, THE DDC CONTROLLER SHALL SEQUENCE THE FOLLOWING:

1. SEND AN ENABLE COMMAND TO THE HUMIDIFIER (HUM-1).
   a. VALIDATE THE STATUS OF THE HUMIDIFIER THROUGH THE UNIT CONTROL PANEL (UCP).
      1) IF THE UNIT FAILS TO START, AN ALARM OF THE EVENT SHALL BE SENT TO THE OPERATOR'S WORKSTATION.

WHEN A RUNNING STATUS FROM THE UNIT CONTROL PANEL (UCP) HAS BEEN CONFIRMED, THE HUMIDIFIER SHALL CONTINUE TO OPERATE UNDER ITS OWN INTERNAL CONTROLS BY MODULATING AS REQUIRED TO MAINTAIN THE SUPPLY AIR RELATIVE HUMIDITY LOW LIMIT SET POINT. THE DDC CONTROLLER SHALL SEND THE UNIT CONTROL PANEL (UCP) THE SET POINT TO MAINTAIN.

THE HUMIDIFICATION MODE OF OPERATION SHALL BE DISABLED WHENEVER THE FOLLOWING CONDITION EXISTS:

1. ANY SPACE RELATIVE HUMIDITY INCREASES 1% (ADJUSTABLE) ABOVE THE RELATIVE HUMIDITY LOW LIMIT SET POINT FOR A PERIOD OF 30 CONSECUTIVE SECONDS (ADJUSTABLE).

WHEN THE ABOVE CONDITION IS MET, THE DDC CONTROLLER SHALL SEQUENCE THE FOLLOWING:

1. SEND A DISABLE COMMAND TO THE HUMIDIFIER (HUM-1).
   a. VALIDATE THE STATUS THROUGH THE UNIT CONTROL PANEL (UCP).
      1) IF THE HUMIDIFIER FAILS TO STOP, AN ALARM OF THE EVENT SHALL BE SENT TO THE OPERATOR'S WORKSTATION.

THE SPACE AIR HUMIDITY LOW LIMIT SET POINT SHALL BE 35% (ADJUSTABLE).

DEHUMIDIFICATION MODE OF OPERATION (DX COOLING) :
THE DEHUMIDIFICATION MODE OF OPERATION SHALL BE ENABLED WHENEVER THE FOLLOWING CONDITION EXISTS:

1. ANY SPACE RELATIVE HUMIDITY INCREASES 1% (ADJUSTABLE) ABOVE THE SPACE RELATIVE HUMIDITY HIGH LIMIT SET POINT FOR A PERIOD OF 30 CONSECUTIVE SECONDS (ADJUSTABLE).

WHEN THE ABOVE CONDITION IS MET, THE DDC CONTROLLER SHALL SEQUENCE THE FOLLOWING:

1. SEND AN ENABLE COMMAND TO THE DX COOLING SYSTEM (COMPRESSORS / CONDENSER FANS).
   a. THE UNIT'S CONTROLLER SHALL CONTINUOUSLY MODULATE THE INVERTER COMPRESSORS AS REQUIRED TO MAINTAIN THE DEHUMIDIFICATION SUPPLY AIR TEMPERATURE SET POINT OF 50°F (ADJUSTABLE).
      1) IF THE SUPPLY AIR RELATIVE HUMIDITY FAILS TO DECREASE, THE DEHUMIDIFICATION SUPPLY AIR TEMPERATURE SHALL CONTINUE TO DECREASE DOWN TO 45°F.
2. SEND AN ENABLE COMMAND TO THE GAS-FIRED HEATING COIL.
   b. THE MODULATING GAS CONTROL VALVE SHALL CONTINUOUSLY MODULATE TO MAINTAIN A DISCHARGE AIR TEMPERATURE OF 55°F BY REHEATING THE SUB-COOLED AIR.

THE DEHUMIDIFICATION MODE OF OPERATION SHALL BE DISABLED WHENEVER THE FOLLOWING CONDITION EXISTS:

1. ALL SPACE RELATIVE HUMIDITY LEVELS DECREASE 1% BELOW THE HIGH LIMIT RELATIVE HUMIDITY SET POINT FOR A PERIOD OF 30 CONSECUTIVE SECONDS.

THE SUPPLY AIR HUMIDITY HIGH LIMIT SET POINT SHALL BE 50% (ADJUSTABLE).

AHU POINTS LIST :
1. WRITEABLE POINTS:
   a. UNIT ENABLE / DISABLE
   b. DUCT STATIC PRESSURE RESET SET POINT
   c. SUPPLY AIR TEMPERATURE RESET SET POINT
   d. BUILDING STATIC PRESSURE SET POINT
   e. OUTSIDE AIR MINIMUM POSITION
2. READABLE POINTS:
   a. SUPPLY AIR TEMPERATURE
   b. OUTSIDE AIR TEMPERATURE
   c. SUPPLY FAN(S) STATUS
   d. SUPPLY FAN(S) VFD FREQUENCY
   e. BUILDING PRESSURE
   f. COMPRESSOR(S) SUCTION PRESSURE
   g. COMPRESSOR(S) DISCHARGE PRESSURE
   h. COMPRESSOR(S) SATURATED CONDENSING TEMPERATURE
   i. COMPRESSOR(S) SATURATED SUCTION TEMPERATURE
   j. ALARMS
   k. FILTER STATUS

SAFETIES :
1. IF THE LOW LIMIT TEMPERATURE SWITCH SENSES A SUPPLY AIR TEMPERATURE BELOW 38°F FOR A PERIOD OF 60 CONSECUTIVE SECONDS, THE UNIT SHALL BE DISABLED AND AN ALARM OF THE EVENT SHALL BE SENT TO THE OPERATOR'S WORKSTATION.
2. IF THE DUCT STATIC PRESSURE SWITCH SENSES A STATIC PRESSURE ABOVE 4" W.G., THE UNIT SHALL BE DISABLED AND AN ALARM OF THE EVENT SHALL BE SENT TO THE OPERATOR'S WORKSTATION.
3. IF THE SUPPLY AIR TEMPERATURE DECREASES 5°F BELOW OR INCREASES 5°F ABOVE THE DISCHARGE AIR TEMPERATURE SET POINT FOR A PERIOD OF 60 CONSECUTIVE SECONDS, AN ALARM OF THE EVENT SHALL BE SENT TO THE OPERATOR'S WORKSTATION.
4. IF ANY SPACE RELATIVE HUMIDITY LEVEL DECREASES 5% BELOW OR 5% ABOVE THE RELATIVE HUMIDITY LOW LIMIT AND HIGH LIMIT SET POINTS FOR A PERIOD OF 60 CONSECUTIVE SECONDS, AN ALARM OF THE EVENT SHALL BE SENT TO THE OPERATOR'S WORKSTATION.
5. IF THE BUILDING PRESSURE INCREASES ABOVE 0.25" W.G. FOR A PERIOD OF 60 CONSECUTIVE SECONDS, AN ALARM OF THE EVENT SHALL BE SENT TO THE OPERATOR'S WORKSTATION.

VARIABLE AIR VOLUME AIR HANDLING UNIT SEQUENCE OF OPERATION

(AHU-1)

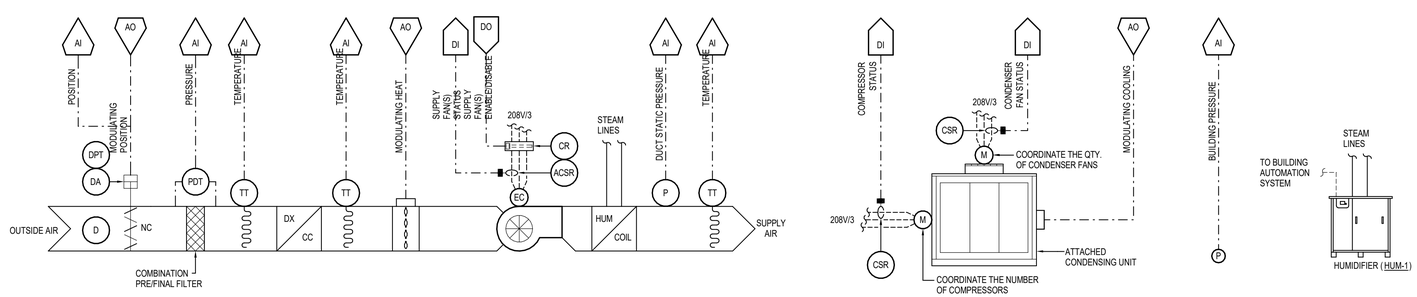

VARIABLE AIR VOLUME AIR HANDLING UNIT CONTROL SYSTEM SCHEMATIC

(AHU-1)

MILLER STAUFFER ARCHITECTS
601 E. FRONT AVE., STE 201
COEUR D' ALENE, IDAHO 83814
P 208.664.1773 F 208.667.3174
WWW.MILLERSTAUFFER.COM

MECHANICAL CONTROLS
BID SET
5/13/2024

D-1 Testing Laboratory
600 W Prairie Ave
Coeur d'Alene, ID 83814

LICENSED ARCHITECT
AR-984031
MICHEAL P. WALKER
STATE OF IDAHO

No.	Description	Date

PROJECT NUMBER 23239
PRINCIPAL Designer
PROJECT MANAGER Author

M6.3

5/14/2024 9:48:22 AM Autodesk Docs://ITD D-1 Laboratory/23239 ITD D1 Lab MEP_23.rvt

GENERAL:
THE LABORATORY VENTILATION WITH HOODS CONTROL SYSTEM SHALL CONSIST OF (1) VARIABLE VOLUME / PRESSURE INDEPENDENT ROOM SUPPLY VALVE W/ A HOT WATER RE-HEAT COIL, (1) VARIABLE VOLUME / PRESSURE INDEPENDENT GENERAL EXHAUST VALVE, (1) VARIABLE VOLUME / PRESSURE INDEPENDENT CANOPY HOOD EXHAUST VALVE, (1) VARIABLE VOLUME / PRESSURE INDEPENDENT SNORKEL EXHAUST VALVE, TWO WALL SWITCHES, AND A SPACE TEMPERATURE AND HUMIDITY SENSOR. THE CONTROL CONTRACTOR SHALL PROVIDE A NEW DDC CONTROL PACKAGE DEDICATED TO THE COMPLETE OPERATION OF THE SYSTEM.

THE AIR VALVE MANUFACTURER SHALL PROVIDE AN INTEGRATION GATEWAY TO FACILITATE COMMUNICATION BETWEEN THE LABORATORY CONTROL SYSTEM AND THE BUILDING AUTOMATION SYSTEM (BAS). THE SUPPLY / EXHAUST AIRFLOW AMOUNTS SHALL VARY DEPENDING ON THE MASTER WEEKLY AND HOLIDAY SCHEDULE SET BY THE DDC CONTRACTOR. THE DDC CONTROLLER SHALL BE CAPABLE OF BEING MANUALLY RESET TO THE OCCUPIED MODE FOR A 2-HOUR TIME PERIOD UPON A SIGNAL FROM AN OVERRIDE BUTTON LOCATED ON THE SPACE TEMPERATURE SENSOR.

LAB SPACE	SUPPLY AIR VALVE	GENERAL EXHAUST VALVE	SNORKEL EXHAUST VALVE	REHEAT VALVE	HEATING COIL
ASPHALT LAB 117	SAV-7	GEV-5	SEV-5	HC-7	CV-7
ASPHALT LAB 124	SAV-3	GEV-1	SEV-3	HC-3	CV-3
GENERAL LAB 125	SAV-9	GEV-2	N/A	HC-9	CV-9
RESIDENCY LAB 131	SAV-1	GEV-1	SEV-1	HC-1	CV-1

OPERATING MODE:
1. THE ROOM SUPPLY VALVE SHALL CONTINUOUSLY MODULATE AS REQUIRED TO MAINTAIN THE FOLLOWING:
   a. NEGATIVE ROOM OFFSET AIRFLOW VOLUME.
   OR
   b. THE SPACE TEMPERATURE SET POINT.
2. THE GENERAL EXHAUST VALVE SHALL CONTINUOUSLY MODULATE AS NEEDED TO HELP TO MAINTAIN THE NEGATIVE ROOM OFFSET AIRFLOW VOLUME (REFER TO THE PRESSURE INDEPENDENT VALVE SCHEDULES).

THERE SHALL ALWAYS BE CONTINUOUS SUPPLY AND EXHAUST IN THE LAB BUT WILL VARY IN AIRFLOW AMOUNTS DEPENDING ON THE MODE OF OPERATION.

OCCUPIED MODE:
WHEN THE LABORATORY VENTILATION WITH HOODS SYSTEM IS SCHEDULED INTO THE OCCUPIED MODE, THE VALVE CONTROLLER AND DDC CONTROLLER SHALL SEQUENCE THE FOLLOWING:

1. SEND AN OPEN COMMAND TO THE ROOM SUPPLY VALVE.
   a. THE VALVE SHALL MODULATE TO PROVIDE THE MINIMUM OCCUPIED AIRFLOW RATE (AS INDICATED IN THE PRESSURE INDEPENDENT ROOM SUPPLY VALVE SCHEDULE).
   b. VALIDATE THE OPERATION OF THE VALVE THROUGH THE CALCULATED AIRFLOW.
      1) IF THE VALVE FAILS TO PROVIDE THE REQUIRED OFFSET WITHIN +/-10% FOR A PERIOD OF 30 CONSECUTIVE SECONDS, AN ALARM OF THE EVENT SHALL BE SENT TO THE OPERATOR'S WORKSTATION.
2. THE GENERAL EXHAUST VALVE SHALL ADJUST ACCORDINGLY TO MAINTAIN THE REQUIRED OFFSET AIRFLOW VOLUME.
   a. VALIDATE THE OPERATION OF THE VALVE THROUGH THE CALCULATED AIRFLOW.
      1) IF THE VALVE FAILS TO PROVIDE THE REQUIRED OFFSET WITHIN +/-10% FOR A PERIOD OF 30 CONSECUTIVE SECONDS, AN ALARM OF THE EVENT SHALL BE SENT TO THE OPERATOR'S WORKSTATION.

NOTE: CONTROL OF THE SPACE TEMPERATURE SHALL BE PROVIDED THROUGH A PROPORTIONAL PLUS INTEGRAL (PI) CONTROLLER IN ORDER TO MAINTAIN THE SPACE TEMPERATURE WITHIN +/- 2°F OF THE SET POINT. ADDITIONAL TIME MUST BE PROVIDED BY THE CONTROLS CONTRACTOR TO PROPERLY TUNE THE PROPORTIONAL PLUS INTEGRAL (PI) CONTROL LOOP.

COOLING MODE OF OPERATION:
THE COOLING MODE OF OPERATION SHALL BE ENABLED WHENEVER BOTH OF THE FOLLOWING CONDITIONS EXIST:

1. THE SUPPLY AIRFLOW IS BELOW THE COOLING SUPPLY AIRFLOW REQUIRED TO MAINTAIN THE SPACE TEMPERATURE (AS INDICATED IN THE PRESSURE INDEPENDENT ROOM SUPPLY VALVE SCHEDULE).

AND

2. THE SPACE TEMPERATURE INCREASES ABOVE THE SPACE TEMPERATURE SET POINT.

WHEN THE ABOVE CONDITIONS ARE MET, THE DDC CONTROLLER SHALL SEQUENCE THE FOLLOWING:

1. SEND AN OVERRIDE COMMAND TO THE RESPECTIVE SUPPLY VALVE AND MODULATE THE DAMPER TO THE COOLING AIRFLOW POSITION (AS INDICATED IN THE PRESSURE INDEPENDENT ROOM SUPPLY VALVE SCHEDULE).
   a. THE GENERAL EXHAUST VALVE SHALL ADJUST ACCORDINGLY TO MAINTAIN THE REQUIRED OFFSET AIRFLOW VOLUME (AS INDICATED IN THE PRESSURE INDEPENDENT ROOM SUPPLY VALVE SCHEDULE).

THE COOLING MODE OF OPERATION SHALL BE DISABLED WHENEVER THE FOLLOWING CONDITION EXISTS:

1. THE SPACE TEMPERATURE IS EQUAL TO OR BELOW THE SPACE TEMPERATURE SET POINT.

WHEN THE ABOVE CONDITION IS MET, THE DDC CONTROLLER SHALL SEQUENCE THE FOLLOWING:

1. ALLOW THE SUPPLY VALVE TO ENTER BACK INTO ITS RESPECTIVE OCCUPIED / UNOCCUPIED AIRFLOW RATE.
   a. THE GENERAL EXHAUST VALVE SHALL ADJUST ACCORDINGLY TO MAINTAIN THE REQUIRED OFFSET AIRFLOW VOLUME.

THE OCCUPIED MODE SPACE TEMPERATURE COOLING SET POINT SHALL BE SET AT 75°F.

HEATING MODE OF OPERATION:
THE HEATING MODE OF OPERATION SHALL BE ENABLED WHENEVER BOTH OF THE FOLLOWING CONDITIONS EXIST:

1. THE SUPPLY AIRFLOW IS BELOW THE MINIMUM AIRFLOW REQUIRED TO MAINTAIN THE SPACE TEMPERATURE (AS INDICATED IN THE PRESSURE INDEPENDENT ROOM SUPPLY VALVE SCHEDULE).

AND

2. THE SPACE TEMPERATURE DECREASES BELOW THE SPACE TEMPERATURE SET POINT.

WHEN THE ABOVE CONDITIONS ARE MET, THE DDC CONTROLLER SHALL SEQUENCE THE FOLLOWING:

1. SEND AN OVERRIDE COMMAND TO THE RESPECTIVE SUPPLY VALVE AND MODULATE THE DAMPER TO THE MINIMUM AIRFLOW AIRFLOW POSITION (AS INDICATED IN THE PRESSURE INDEPENDENT ROOM SUPPLY VALVE SCHEDULE).
   a. THE GENERAL EXHAUST VALVE SHALL ADJUST ACCORDINGLY TO MAINTAIN THE REQUIRED OFFSET AIRFLOW VOLUME (AS INDICATED IN THE PRESSURE INDEPENDENT ROOM SUPPLY VALVE SCHEDULE).
2. SEND AN ENABLE COMMAND TO THE HOT WATER REHEAT CONTROL VALVE.
   a. THE CONTROL VALVE SHALL CONTINUOUSLY MODULATE AS REQUIRED TO MAINTAIN THE SPACE TEMPERATURE SET POINT.

THE HEATING MODE OF OPERATION SHALL BE DISABLED WHENEVER THE FOLLOWING CONDITION EXISTS:

1. THE SPACE TEMPERATURE IS EQUAL TO OR ABOVE THE SPACE TEMPERATURE SET POINT.

WHEN THE ABOVE CONDITION IS MET, THE DDC CONTROLLER SHALL SEQUENCE THE FOLLOWING:

1. ALLOW THE SUPPLY VALVE TO ENTER BACK INTO ITS RESPECTIVE OCCUPIED / UNOCCUPIED AIRFLOW RATE.
   a. THE GENERAL EXHAUST VALVE SHALL ADJUST ACCORDINGLY TO MAINTAIN THE REQUIRED OFFSET AIRFLOW VOLUME.

THE OCCUPIED MODE SPACE TEMPERATURE HEATING SET POINT SHALL BE SET AT 70°F.

UNOCCUPIED MODE:
WHEN THE LABORATORY VENTILATION SYSTEM IS SCHEDULED INTO THE UNOCCUPIED MODE, THE DDC CONTROLLER SHALL SEQUENCE THE FOLLOWING:

1. SEND AN OPEN COMMAND TO THE ROOM SUPPLY VALVE.
   a. THE VALVE SHALL MODULATE TO PROVIDE THE MINIMUM OCCUPIED AIRFLOW RATE (AS INDICATED IN THE PRESSURE INDEPENDENT ROOM SUPPLY VALVE SCHEDULE).
   b. VALIDATE THE OPERATION OF THE VALVE THROUGH THE CALCULATED AIRFLOW.
      1) IF THE VALVE FAILS TO PROVIDE THE REQUIRED OFFSET WITHIN +/-10% FOR A PERIOD OF 30 CONSECUTIVE SECONDS, AN ALARM OF THE EVENT SHALL BE SENT TO THE OPERATOR'S WORKSTATION.
2. THE GENERAL EXHAUST VALVE SHALL ADJUST ACCORDINGLY TO MAINTAIN THE REQUIRED OFFSET AIRFLOW VOLUME.
   a. VALIDATE THE OPERATION OF THE VALVE THROUGH THE CALCULATED AIRFLOW.
      1) IF THE VALVE FAILS TO PROVIDE THE REQUIRED OFFSET WITHIN +/-10% FOR A PERIOD OF 30 CONSECUTIVE SECONDS, AN ALARM OF THE EVENT SHALL BE SENT TO THE OPERATOR'S WORKSTATION.

THE UNOCCUPIED MODE SPACE TEMPERATURE COOLING SET POINT SHALL BE SET AT 80°F.
THE UNOCCUPIED MODE SPACE TEMPERATURE HEATING SET POINT SHALL BE SET AT 60°F

ADDITIONAL EXHAUST MODE:
IF THE WALL SWITCH FOR THE CANOPY HOOD OR SNORKEL HOOD IS ENABLED WHILE THE VENTILATION MODE IS OPERATING, THE VALVE CONTROLLER AND DDC CONTROLLER SHALL SEQUENCE THE FOLLOWING:

1. SEND AN ENABLE COMMAND TO THE CANOPY HOOD OR SNORKEL HOOD EXHAUST VALVE.
   a. THE VALVE SHALL MODULATE TO PROVIDE THE AIRFLOW LISTED IN THE CANOPY HOOD AND SNORKEL EXHAUST AIR VALVE SCHEDULES.
   b. VALIDATE THE OPERATION OF THE VALVE THROUGH THE CALCULATED AIRFLOW.
      1) IF THE VALVE FAILS TO PROVIDE THE REQUIRED OFFSET WITHIN +/-10% (ADJUSTABLE) FOR A PERIOD OF 30 CONSECUTIVE SECONDS, AN ALARM OF THE EVENT SHALL BE SENT TO THE OPERATOR'S WORKSTATION.
2. THE GENERAL EXHAUST VALVE SHALL ADJUST ACCORDINGLY TO MAINTAIN THE REQUIRED OFFSET AIRFLOW VOLUME.
3. THE SUPPLY VALVE SHALL ADJUST ACCORDINGLY TO MAINTAIN THE REQUIRED OFFSET AIRFLOW VOLUME.

LAB VENTILATION WITH MULTIPLE HOODS SYSTEM SEQUENCE OF OPERATION

(ASPHALT LAB 117 / ASPHALT LAB 124 / GENERAL LAB 125 / RESIDENCY LAB 131)

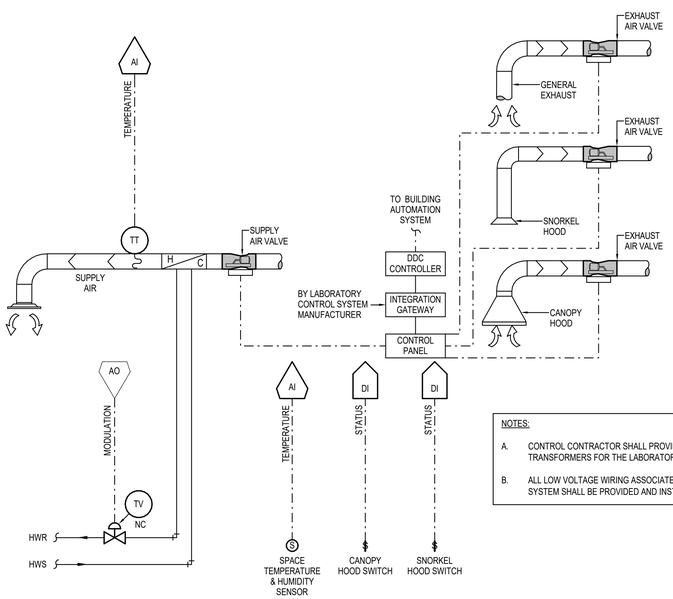

NOTES:

A. CONTROL CONTRACTOR SHALL PROVIDE AND INSTALL THE REQUIRED 110V TO 24V TRANSFORMERS FOR THE LABORATORY HOOD CONTROL SYSTEM.

B. ALL LOW VOLTAGE WIRING ASSOCIATED WITH THE LABORATORY HOOD CONTROL SYSTEM SHALL BE PROVIDED AND INSTALLED BY THE CONTROL CONTRACTOR.

LAB VENTILATION WITH MULTIPLE HOODS SYSTEM CONTROL SCHEMATIC

(ASPHALT LAB 117 / ASPHALT LAB 124 / GENERAL LAB 125 / RESIDENCY LAB 131)

GENERAL:
THE LABORATORY VENTILATION WITH SNORKEL HOOD CONTROL SYSTEM SHALL CONSIST OF (1) VARIABLE VOLUME / PRESSURE INDEPENDENT ROOM SUPPLY VALVE W/ A HOT WATER RE-HEAT COIL, (1) VARIABLE VOLUME / PRESSURE INDEPENDENT SNORKEL EXHAUST VALVE, ONE WALL SWITCH, AND A SPACE TEMPERATURE AND HUMIDITY SENSOR. THE CONTROL CONTRACTOR SHALL PROVIDE A NEW DDC CONTROL PACKAGE DEDICATED TO THE COMPLETE OPERATION OF THE SYSTEM.

THE AIR VALVE MANUFACTURER SHALL PROVIDE AN INTEGRATION GATEWAY TO FACILITATE COMMUNICATION BETWEEN THE LABORATORY CONTROL SYSTEM AND THE BUILDING AUTOMATION SYSTEM (BAS). THE SUPPLY / EXHAUST AIRFLOW AMOUNTS SHALL VARY DEPENDING ON THE MASTER WEEKLY AND HOLIDAY SCHEDULE SET BY THE DDC CONTRACTOR. THE DDC CONTROLLER SHALL BE CAPABLE OF BEING MANUALLY RESET TO THE OCCUPIED MODE FOR A 2-HOUR TIME PERIOD UPON A SIGNAL FROM AN OVERRIDE BUTTON LOCATED ON THE SPACE TEMPERATURE SENSOR.

THE SNORKEL VALVE SHALL CONTINUOUSLY OPERATE PROVIDING EXHAUST AIRFLOW REQUIRED TO MAINTAIN A NEGATIVE PRESSURE DIFFERENTIAL. THE SNORKEL VALVE IS ACTING AS A SNORKEL AND GENERAL EXHAUST SOURCE.

LAB SPACE	SUPPLY AIR VALVE	SNORKEL EXHAUST VALVE	REHEAT VALVE	HEATING COIL
RESIDENCY NOISE ROOM 130	SAV-8	SEV-2	HC-8	CV-8
MATERIAL LAB 118	SAV-6	SEV-4	HC-6	CV-6

OPERATING MODE:
1. THE ROOM SUPPLY VALVE SHALL CONTINUOUSLY MODULATE AS REQUIRED TO MAINTAIN THE FOLLOWING:
   a. NEGATIVE ROOM OFFSET AIRFLOW VOLUME.
   OR
   b. THE SPACE TEMPERATURE SET POINT.
2. THE SNORKEL EXHAUST VALVE SHALL CONTINUOUSLY MODULATE AS NEEDED TO HELP TO MAINTAIN THE NEGATIVE ROOM OFFSET AIRFLOW VOLUME (REFER TO THE PRESSURE INDEPENDENT VALVE SCHEDULES).

THERE SHALL ALWAYS BE CONTINUOUS SUPPLY AND EXHAUST IN THE LAB BUT WILL VARY IN AIRFLOW AMOUNTS DEPENDING ON THE MODE OF OPERATION.

OCCUPIED MODE:
WHEN THE LABORATORY VENTILATION WITH SNORKEL HOOD SYSTEM IS SCHEDULED INTO THE OCCUPIED MODE, THE VALVE CONTROLLER AND DDC CONTROLLER SHALL SEQUENCE THE FOLLOWING:

1. SEND AN OPEN COMMAND TO THE ROOM SUPPLY VALVE.
   a. THE VALVE SHALL MODULATE TO PROVIDE THE MINIMUM OCCUPIED AIRFLOW RATE (AS INDICATED IN THE PRESSURE INDEPENDENT ROOM SUPPLY VALVE SCHEDULE).
   b. VALIDATE THE OPERATION OF THE VALVE THROUGH THE CALCULATED AIRFLOW.
      1) IF THE VALVE FAILS TO PROVIDE THE REQUIRED OFFSET WITHIN +/-10% FOR A PERIOD OF 30 CONSECUTIVE SECONDS, AN ALARM OF THE EVENT SHALL BE SENT TO THE OPERATOR'S WORKSTATION.
2. THE SNORKEL EXHAUST VALVE SHALL ADJUST ACCORDINGLY TO MAINTAIN THE REQUIRED OFFSET AIRFLOW VOLUME.
   a. VALIDATE THE OPERATION OF THE VALVE THROUGH THE CALCULATED AIRFLOW.
      1) IF THE VALVE FAILS TO PROVIDE THE REQUIRED OFFSET WITHIN +/-10% FOR A PERIOD OF 30 CONSECUTIVE SECONDS, AN ALARM OF THE EVENT SHALL BE SENT TO THE OPERATOR'S WORKSTATION.

NOTE: CONTROL OF THE SPACE TEMPERATURE SHALL BE PROVIDED THROUGH A PROPORTIONAL PLUS INTEGRAL (PI) CONTROLLER IN ORDER TO MAINTAIN THE SPACE TEMPERATURE WITHIN +/- 2°F OF THE SET POINT. ADDITIONAL TIME MUST BE PROVIDED BY THE CONTROLS CONTRACTOR TO PROPERLY TUNE THE PROPORTIONAL PLUS INTEGRAL (PI) CONTROL LOOP.

COOLING MODE OF OPERATION:
THE COOLING MODE OF OPERATION SHALL BE ENABLED WHENEVER BOTH OF THE FOLLOWING CONDITIONS EXIST:

1. THE SUPPLY AIRFLOW IS BELOW THE COOLING SUPPLY AIRFLOW REQUIRED TO MAINTAIN THE SPACE TEMPERATURE (AS INDICATED IN THE PRESSURE INDEPENDENT ROOM SUPPLY VALVE SCHEDULE).

AND

2. THE SPACE TEMPERATURE INCREASES ABOVE THE SPACE TEMPERATURE SET POINT.

WHEN THE ABOVE CONDITIONS ARE MET, THE DDC CONTROLLER SHALL SEQUENCE THE FOLLOWING:

1. SEND AN OVERRIDE COMMAND TO THE RESPECTIVE SUPPLY VALVE AND MODULATE THE DAMPER TO THE COOLING AIRFLOW POSITION (AS INDICATED IN THE PRESSURE INDEPENDENT ROOM SUPPLY VALVE SCHEDULE).
   a. THE SNORKEL EXHAUST VALVE SHALL ADJUST ACCORDINGLY TO MAINTAIN THE REQUIRED OFFSET AIRFLOW VOLUME (AS INDICATED IN THE PRESSURE INDEPENDENT ROOM SUPPLY VALVE SCHEDULE).

THE COOLING MODE OF OPERATION SHALL BE DISABLED WHENEVER THE FOLLOWING CONDITION EXISTS:

1. THE SPACE TEMPERATURE IS EQUAL TO OR BELOW THE SPACE TEMPERATURE SET POINT.

WHEN THE ABOVE CONDITION IS MET, THE DDC CONTROLLER SHALL SEQUENCE THE FOLLOWING:

1. ALLOW THE SUPPLY VALVE TO ENTER BACK INTO ITS RESPECTIVE OCCUPIED / UNOCCUPIED AIRFLOW RATE.
   a. THE SNORKEL EXHAUST VALVE SHALL ADJUST ACCORDINGLY TO MAINTAIN THE REQUIRED OFFSET AIRFLOW VOLUME.

THE OCCUPIED MODE SPACE TEMPERATURE COOLING SET POINT SHALL BE SET AT 75°F.

HEATING MODE OF OPERATION:
THE HEATING MODE OF OPERATION SHALL BE ENABLED WHENEVER BOTH OF THE FOLLOWING CONDITIONS EXIST:

1. THE SUPPLY AIRFLOW IS BELOW THE MINIMUM AIRFLOW REQUIRED TO MAINTAIN THE SPACE TEMPERATURE (AS INDICATED IN THE PRESSURE INDEPENDENT ROOM SUPPLY VALVE SCHEDULE).

AND

2. THE SPACE TEMPERATURE DECREASES BELOW THE SPACE TEMPERATURE SET POINT.

WHEN THE ABOVE CONDITIONS ARE MET, THE DDC CONTROLLER SHALL SEQUENCE THE FOLLOWING:

1. SEND AN OVERRIDE COMMAND TO THE RESPECTIVE SUPPLY VALVE AND MODULATE THE DAMPER TO THE MINIMUM AIRFLOW AIRFLOW POSITION (AS INDICATED IN THE PRESSURE INDEPENDENT ROOM SUPPLY VALVE SCHEDULE).
   a. THE GENERAL EXHAUST VALVE (GEV-109) SHALL ADJUST ACCORDINGLY TO MAINTAIN THE REQUIRED OFFSET AIRFLOW VOLUME (AS INDICATED IN THE PRESSURE INDEPENDENT ROOM SUPPLY VALVE SCHEDULE).
2. SEND AN ENABLE COMMAND TO THE HOT WATER REHEAT CONTROL VALVE.
   a. THE CONTROL VALVE SHALL CONTINUOUSLY MODULATE AS REQUIRED TO MAINTAIN THE SPACE TEMPERATURE SET POINT.

THE HEATING MODE OF OPERATION SHALL BE DISABLED WHENEVER THE FOLLOWING CONDITION EXISTS:

1. THE SPACE TEMPERATURE IS EQUAL TO OR ABOVE THE SPACE TEMPERATURE SET POINT.

WHEN THE ABOVE CONDITION IS MET, THE DDC CONTROLLER SHALL SEQUENCE THE FOLLOWING:

1. ALLOW THE SUPPLY VALVE TO ENTER BACK INTO ITS RESPECTIVE OCCUPIED / UNOCCUPIED AIRFLOW RATE.
   a. THE GENERAL EXHAUST VALVE SHALL ADJUST ACCORDINGLY TO MAINTAIN THE REQUIRED OFFSET AIRFLOW VOLUME.

THE OCCUPIED MODE SPACE TEMPERATURE HEATING SET POINT SHALL BE SET AT 70°F.

UNOCCUPIED MODE:
WHEN THE LABORATORY VENTILATION SYSTEM IS SCHEDULED INTO THE UNOCCUPIED MODE, THE DDC CONTROLLER SHALL SEQUENCE THE FOLLOWING:

1. SEND AN OPEN COMMAND TO THE ROOM SUPPLY VALVE.
   a. THE VALVE SHALL MODULATE TO PROVIDE THE MINIMUM OCCUPIED AIRFLOW RATE (AS INDICATED IN THE PRESSURE INDEPENDENT ROOM SUPPLY VALVE SCHEDULE).
   b. VALIDATE THE OPERATION OF THE VALVE THROUGH THE CALCULATED AIRFLOW.
      1) IF THE VALVE FAILS TO PROVIDE THE REQUIRED OFFSET WITHIN +/-10% FOR A PERIOD OF 30 CONSECUTIVE SECONDS, AN ALARM OF THE EVENT SHALL BE SENT TO THE OPERATOR'S WORKSTATION.
2. THE SNORKEL EXHAUST VALVE SHALL ADJUST ACCORDINGLY TO MAINTAIN THE REQUIRED OFFSET AIRFLOW VOLUME.
   a. VALIDATE THE OPERATION OF THE VALVE THROUGH THE CALCULATED AIRFLOW.
      1) IF THE VALVE FAILS TO PROVIDE THE REQUIRED OFFSET WITHIN +/-10% FOR A PERIOD OF 30 CONSECUTIVE SECONDS, AN ALARM OF THE EVENT SHALL BE SENT TO THE OPERATOR'S WORKSTATION.

THE UNOCCUPIED MODE SPACE TEMPERATURE COOLING SET POINT SHALL BE SET AT 80°F.
THE UNOCCUPIED MODE SPACE TEMPERATURE HEATING SET POINT SHALL BE SET AT 60°F

ADDITIONAL EXHAUST MODE:
IF THE WALL SWITCH FOR THE SNORKEL HOOD IS ENABLED WHILE THE VENTILATION MODE IS OPERATING, THE VALVE CONTROLLER AND DDC CONTROLLER SHALL SEQUENCE THE FOLLOWING:

1. MODULATE THE SNORKEL HOOD EXHAUST VALVE OPEN TO PROVIDE THE AIRFLOW LISTED IN THE SNORKEL EXHAUST AIR VALVE SCHEDULES.
   a. VALIDATE THE OPERATION OF THE VALVE THROUGH THE CALCULATED AIRFLOW.
      1) IF THE VALVE FAILS TO PROVIDE THE REQUIRED OFFSET WITHIN +/-10% (ADJUSTABLE) FOR A PERIOD OF 30 CONSECUTIVE SECONDS, AN ALARM OF THE EVENT SHALL BE SENT TO THE OPERATOR'S WORKSTATION.
2. THE SUPPLY VALVE SHALL ADJUST ACCORDINGLY TO MAINTAIN THE REQUIRED OFFSET AIRFLOW VOLUME.
   a. VALIDATE THE OPERATION OF THE VALVE THROUGH THE CALCULATED AIRFLOW.
      1) IF THE VALVE FAILS TO PROVIDE THE REQUIRED OFFSET WITHIN +/-10% (ADJUSTABLE) FOR A PERIOD OF 30 CONSECUTIVE SECONDS, AN ALARM OF THE EVENT SHALL BE SENT TO THE OPERATOR'S WORKSTATION.

LAB VENTILATION WITH SNORKEL HOOD SYSTEM SEQUENCE OF OPERATION

(MATERIAL LAB 118 / RESIDENCY NOISE ROOM 130)

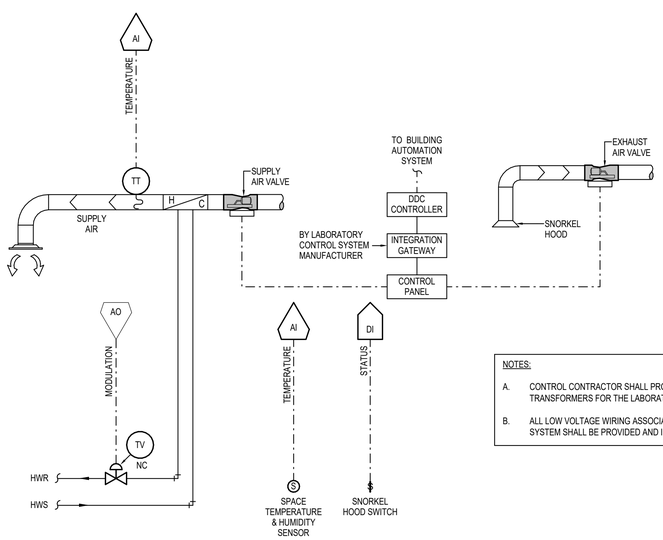

NOTES:

A. CONTROL CONTRACTOR SHALL PROVIDE AND INSTALL THE REQUIRED 110V TO 24V TRANSFORMERS FOR THE LABORATORY HOOD CONTROL SYSTEM.

B. ALL LOW VOLTAGE WIRING ASSOCIATED WITH THE LABORATORY HOOD CONTROL SYSTEM SHALL BE PROVIDED AND INSTALLED BY THE CONTROL CONTRACTOR.

LAB VENTILATION WITH SNORKEL HOODS SYSTEM CONTROL SCHEMATIC

(MATERIAL LAB 118 / RESIDENCY NOISE ROOM 130)

MUSGROVE ENGINEERING, P.A.
234 S. Whisperwood Way
Boise, ID 83709
208.384.0585
645 West 25th Street
Idaho Falls, ID 83402
208.523.2862
www.musgroveepa.com
Project No. 23-239

PROFESSIONAL ENGINEER LICENSED 16683 5/14/2024 STATE OF IDAHO CHRISTOPHER D. YKE

MILLER STAUFFER ARCHITECTS
601 E. FRONT AVE., STE 201
COEUR D' ALENE, IDAHO 83814
P 208.664.1773 F 208.667.3174
WWW.MILLERSTAUFFER.COM

MECHANICAL CONTROLS

BID SET

5/13/2024

D-1 Testing Laboratory
600 W Prairie Ave
Coeur d'Alene, ID 83814

LICENSED ARCHITECT AR-984031 MICHEAL P. WALKER STATE OF IDAHO

No.	Description	Date

PROJECT NUMBER 23239
PRINCIPAL Designer
PROJECT MANAGER Author

M6.4

5/14/2024 9:48:22 AM Autodesk Docs://ITD D-1 Laboratory/23239 ITD D1 Lab MEP_23.rvt

GENERAL :
THE LABORATORY VENTILATION WITH GENERAL EXHAUST CONTROL SYSTEM SHALL CONSIST OF (1) VARIABLE VOLUME / PRESSURE INDEPENDENT ROOM SUPPLY VALVE W/ A HOT WATER RE-HEAT COIL, (1) VARIABLE VOLUME / PRESSURE INDEPENDENT GENERAL EXHAUST VALVE, AND A SPACE TEMPERATURE AND HUMIDITY SENSOR. THE CONTROL CONTRACTOR SHALL PROVIDE A NEW DDC CONTROL PACKAGE DEDICATED TO THE COMPLETE OPERATION OF THE SYSTEM.

THE AIR VALVE MANUFACTURER SHALL PROVIDE AN INTEGRATION GATEWAY TO FACILITATE COMMUNICATION BETWEEN THE LABORATORY CONTROL SYSTEM AND THE BUILDING AUTOMATION SYSTEM (BAS). THE SUPPLY / EXHAUST AIRFLOW AMOUNTS SHALL VARY DEPENDING ON THE MASTER WEEKLY AND HOLIDAY SCHEDULE SET BY THE DDC CONTRACTOR. THE DDC CONTROLLER SHALL BE CAPABLE OF BEING MANUALLY RESET TO THE OCCUPIED MODE FOR A 2-HOUR TIME PERIOD UPON A SIGNAL FROM AN OVERRIDE BUTTON LOCATED ON THE SPACE TEMPERATURE SENSOR.

THE SNORKEL VALVE SHALL CONTINUOUSLY OPERATE PROVIDING EXHAUST AIRFLOW REQUIRED TO MAINTAIN A NEGATIVE PRESSURE DIFFERENTIAL. THE SNORKEL VALVE IS ACTING AS A SNORKEL AND GENERAL EXHAUST SOURCE.

LAB SPACE	SUPPLY AIR VALVE	GENERAL EXHAUST VALVE	REHEAT VALVE	HEATING COIL
CONCRETE 119	SAV-5	GEV-6	HC-5	CV-5
MATERIAL LAB 118	SAV-2	GEV-7	HC-2	CV-2
D-1 LAB 123	SAV-4	GEV-4	HC-4	CV-4

OPERATING MODE:
1. THE ROOM SUPPLY VALVE SHALL CONTINUOUSLY MODULATE AS REQUIRED TO MAINTAIN THE FOLLOWING:
   a. NEGATIVE ROOM OFFSET AIRFLOW VOLUME.
   OR
   b. THE SPACE TEMPERATURE SET POINT.
2. THE GENERAL EXHAUST VALVE SHALL CONTINUOUSLY MODULATE AS NEEDED TO HELP TO MAINTAIN THE NEGATIVE ROOM OFFSET AIRFLOW VOLUME (REFER TO THE PRESSURE INDEPENDENT VALVE SCHEDULES).

THERE SHALL ALWAYS BE CONTINUOUS SUPPLY AND EXHAUST IN THE LAB BUT WILL VARY IN AIRFLOW AMOUNTS DEPENDING ON THE MODE OF OPERATION.

OCCUPIED MODE :
WHEN THE LABORATORY VENTILATION WITH SNORKEL HOOD SYSTEM IS SCHEDULED INTO THE OCCUPIED MODE, THE VALVE CONTROLLER AND DDC CONTROLLER SHALL SEQUENCE THE FOLLOWING:

1. SEND AN OPEN COMMAND TO THE ROOM SUPPLY VALVE.
   a. THE VALVE SHALL MODULATE TO PROVIDE THE MINIMUM OCCUPIED AIRFLOW RATE (AS INDICATED IN THE PRESSURE INDEPENDENT ROOM SUPPLY VALVE SCHEDULE).
   b. VALIDATE THE OPERATION OF THE VALVE THROUGH THE CALCULATED AIRFLOW.
      1) IF THE VALVE FAILS TO PROVIDE THE REQUIRED OFFSET WITHIN +/-10% FOR A PERIOD OF 30 CONSECUTIVE SECONDS, AN ALARM OF THE EVENT SHALL BE SENT TO THE OPERATOR'S WORKSTATION.
2. THE GENERAL EXHAUST VALVE SHALL ADJUST ACCORDINGLY TO MAINTAIN THE REQUIRED OFFSET AIRFLOW VOLUME.
   a. VALIDATE THE OPERATION OF THE VALVE THROUGH THE CALCULATED AIRFLOW.
      1) IF THE VALVE FAILS TO PROVIDE THE REQUIRED OFFSET WITHIN +/-10% FOR A PERIOD OF 30 CONSECUTIVE SECONDS, AN ALARM OF THE EVENT SHALL BE SENT TO THE OPERATOR'S WORKSTATION.

NOTE: CONTROL OF THE SPACE TEMPERATURE SHALL BE PROVIDED THROUGH A PROPORTIONAL PLUS INTEGRAL (PI) CONTROLLER IN ORDER TO MAINTAIN THE SPACE TEMPERATURE WITHIN +/- 2°F OF THE SET POINT. ADDITIONAL TIME MUST BE PROVIDED BY THE CONTROLS CONTRACTOR TO PROPERLY TUNE THE PROPORTIONAL PLUS INTEGRAL (PI) CONTROL LOOP.

COOLING MODE OF OPERATION:
THE COOLING MODE OF OPERATION SHALL BE ENABLED WHENEVER BOTH OF THE FOLLOWING CONDITIONS EXIST:

1. THE SUPPLY AIRFLOW IS BELOW THE COOLING SUPPLY AIRFLOW REQUIRED TO MAINTAIN THE SPACE TEMPERATURE (AS INDICATED IN THE PRESSURE INDEPENDENT ROOM SUPPLY VALVE SCHEDULE).

AND

2. THE SPACE TEMPERATURE INCREASES ABOVE THE SPACE TEMPERATURE SET POINT.

WHEN THE ABOVE CONDITIONS ARE MET, THE DDC CONTROLLER SHALL SEQUENCE THE FOLLOWING:

1. SEND AN OVERRIDE COMMAND TO THE RESPECTIVE SUPPLY VALVE AND MODULATE THE DAMPER TO THE COOLING AIRFLOW POSITION (AS INDICATED IN THE PRESSURE INDEPENDENT ROOM SUPPLY VALVE SCHEDULE).
   a. THE GENERAL EXHAUST VALVE SHALL ADJUST ACCORDINGLY TO MAINTAIN THE REQUIRED OFFSET AIRFLOW VOLUME (AS INDICATED IN THE PRESSURE INDEPENDENT ROOM SUPPLY VALVE SCHEDULE).

THE COOLING MODE OF OPERATION SHALL BE DISABLED WHENEVER THE FOLLOWING CONDITION EXISTS:

1. THE SPACE TEMPERATURE IS EQUAL TO OR BELOW THE SPACE TEMPERATURE SET POINT.

WHEN THE ABOVE CONDITION IS MET, THE DDC CONTROLLER SHALL SEQUENCE THE FOLLOWING:

1. ALLOW THE SUPPLY VALVE TO ENTER BACK INTO ITS RESPECTIVE OCCUPIED / UNOCCUPIED AIRFLOW RATE.
   a. THE GENERAL EXHAUST VALVE SHALL ADJUST ACCORDINGLY TO MAINTAIN THE REQUIRED OFFSET AIRFLOW VOLUME.

THE OCCUPIED MODE SPACE TEMPERATURE COOLING SET POINT SHALL BE SET AT 75°F.

HEATING MODE OF OPERATION:
THE HEATING MODE OF OPERATION SHALL BE ENABLED WHENEVER BOTH OF THE FOLLOWING CONDITIONS EXIST:

1. THE SUPPLY AIRFLOW IS BELOW THE MINIMUM AIRFLOW REQUIRED TO MAINTAIN THE SPACE TEMPERATURE (AS INDICATED IN THE PRESSURE INDEPENDENT ROOM SUPPLY VALVE SCHEDULE).

AND

2. THE SPACE TEMPERATURE DECREASES BELOW THE SPACE TEMPERATURE SET POINT.

WHEN THE ABOVE CONDITIONS ARE MET, THE DDC CONTROLLER SHALL SEQUENCE THE FOLLOWING:

1. SEND AN OVERRIDE COMMAND TO THE RESPECTIVE SUPPLY VALVE AND MODULATE THE DAMPER TO THE MINIMUM AIRFLOW AIRFLOW POSITION (AS INDICATED IN THE PRESSURE INDEPENDENT ROOM SUPPLY VALVE SCHEDULE).
   a. THE GENERAL EXHAUST VALVE SHALL ADJUST ACCORDINGLY TO MAINTAIN THE REQUIRED OFFSET AIRFLOW VOLUME (AS INDICATED IN THE PRESSURE INDEPENDENT ROOM SUPPLY VALVE SCHEDULE).
2. SEND AN ENABLE COMMAND TO THE HOT WATER REHEAT CONTROL VALVE.
   a. THE CONTROL VALVE SHALL CONTINUOUSLY MODULATE AS REQUIRED TO MAINTAIN THE SPACE TEMPERATURE SET POINT.

THE HEATING MODE OF OPERATION SHALL BE DISABLED WHENEVER THE FOLLOWING CONDITION EXISTS:

1. THE SPACE TEMPERATURE IS EQUAL TO OR ABOVE THE SPACE TEMPERATURE SET POINT.

WHEN THE ABOVE CONDITION IS MET, THE DDC CONTROLLER SHALL SEQUENCE THE FOLLOWING:

1. ALLOW THE SUPPLY VALVE TO ENTER BACK INTO ITS RESPECTIVE OCCUPIED / UNOCCUPIED AIRFLOW RATE.
   a. THE GENERAL EXHAUST VALVE SHALL ADJUST ACCORDINGLY TO MAINTAIN THE REQUIRED OFFSET AIRFLOW VOLUME.

THE OCCUPIED MODE SPACE TEMPERATURE HEATING SET POINT SHALL BE SET AT 70°F.

UNOCCUPIED MODE :
WHEN THE LABORATORY VENTILATION SYSTEM IS SCHEDULED INTO THE UNOCCUPIED MODE, THE DDC CONTROLLER SHALL SEQUENCE THE FOLLOWING:

1. SEND AN OPEN COMMAND TO THE ROOM SUPPLY VALVE.
   a. THE VALVE SHALL MODULATE TO PROVIDE THE MINIMUM OCCUPIED AIRFLOW RATE (AS INDICATED IN THE PRESSURE INDEPENDENT ROOM SUPPLY VALVE SCHEDULE).
   b. VALIDATE THE OPERATION OF THE VALVE THROUGH THE CALCULATED AIRFLOW.
      1) IF THE VALVE FAILS TO PROVIDE THE REQUIRED OFFSET WITHIN +/-10% FOR A PERIOD OF 30 CONSECUTIVE SECONDS, AN ALARM OF THE EVENT SHALL BE SENT TO THE OPERATOR'S WORKSTATION.
2. THE GENERAL EXHAUST VALVE SHALL ADJUST ACCORDINGLY TO MAINTAIN THE REQUIRED OFFSET AIRFLOW VOLUME.
   a. VALIDATE THE OPERATION OF THE VALVE THROUGH THE CALCULATED AIRFLOW.
      1) IF THE VALVE FAILS TO PROVIDE THE REQUIRED OFFSET WITHIN +/-10% FOR A PERIOD OF 30 CONSECUTIVE SECONDS, AN ALARM OF THE EVENT SHALL BE SENT TO THE OPERATOR'S WORKSTATION.

THE UNOCCUPIED MODE SPACE TEMPERATURE COOLING SET POINT SHALL BE SET AT 80°F.
THE UNOCCUPIED MODE SPACE TEMPERATURE HEATING SET POINT SHALL BE SET AT 60°F

D-1 LAB 123 ADDITIONAL VENTILATION
THE D-1 LAB 123 IS PHYSICALLY CONNECTED TO MULTIPLE SMALLER LABS WHICH HAVE MORE EXHAUST. IF MULTIPLE SMALLER LABS ENABLE A SIGNIFICANT AMOUNT OF EXHAUST THE D-1 LAB 123 WILL PROVIDE ADDITIONAL SUPPLY AIRFLOW TO MAINTAIN A SLIGHT NEGATIVE BUILDING PRESSURE. SUPPLY VALVE (SAV-4) SHALL PROVIDE ADDITIONAL AIRFLOW IF THE SPACE GOES TOO NEGATIVE.

D-1 LAB 123 ADDITIONAL VENTILATION SHALL BE ENABLED WHEN THE FOLLOWING CONDITIONS EXIST:

1. THE GENERAL EXHAUST AIR VALVE (GEV-4) IS AT MAXIMUM AIRFLOW (AS INDICATED IN THE PRESSURE INDEPENDENT GENERAL EXHAUST VALVE SCHEDULE) FOR A PERIOD OF 30 CONSECUTIVE SECONDS (ADJUSTABLE).

AND

2. THE D-1 LAB 123 SPACE PRESSURE FALLS BELOW -0.25" W.G. (ADJUSTABLE) FOR A PERIOD OF 30 CONSECUTIVE SECONDS (ADJUSTABLE).

WHEN THE ABOVE CONDITIONS ARE MET, THE DDC CONTROLLER SHALL SEQUENCE THE FOLLOWING:

1. SEND AN OPEN COMMAND TO THE ROOM SUPPLY VALVE.
   a. THE VALVE SHALL MODULATE OPEN TO MAINTAIN A NEGATIVE SPACE PRESSURE OF -0.02" W.G. (ADJUSTABLE).
   b. VALIDATE THE OPERATION OF THE VALVE THROUGH THE CALCULATED AIRFLOW.
      1) IF THE VALVE FAILS TO PROVIDE THE REQUIRED OFFSET WITHIN +/-10% FOR A PERIOD OF 30 CONSECUTIVE SECONDS, AN ALARM OF THE EVENT SHALL BE SENT TO THE OPERATOR'S WORKSTATION.

LAB VENTILATION WITH GENERAL EXHAUST SYSTEM SEQUENCE OF OPERATION

(CONCRETE 119 / D-1 LAB 123 / SOIL/AGGREGATE 126)

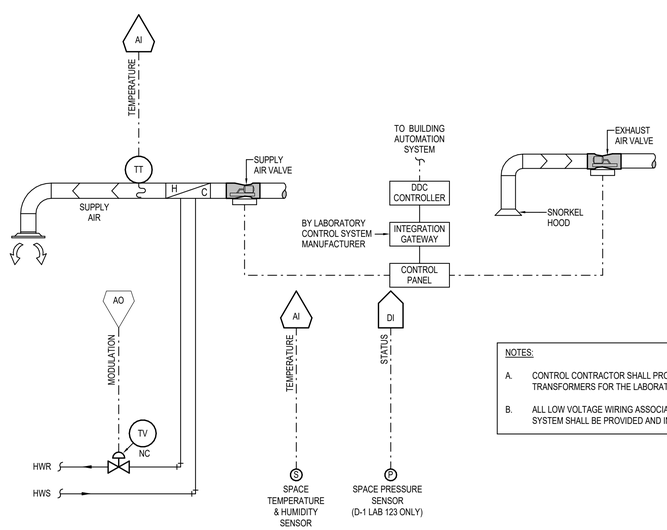

NOTES:

A. CONTROL CONTRACTOR SHALL PROVIDE AND INSTALL THE REQUIRED 110V TO 24V TRANSFORMERS FOR THE LABORATORY HOOD CONTROL SYSTEM.

B. ALL LOW VOLTAGE WIRING ASSOCIATED WITH THE LABORATORY HOOD CONTROL SYSTEM SHALL BE PROVIDED AND INSTALLED BY THE CONTROL CONTRACTOR.

LAB VENTILATION WITH GENERAL EXHAUST SYSTEM CONTROL SCHEMATIC

(CONCRETE 119 / D-1 LAB 123 / SOIL/AGGREGATE 126)

GENERAL :
THE GENERAL EXHAUST FAN SYSTEM SHALL CONSIST OF A CEILING-MOUNTED EXHAUST FAN AND A WALL SWITCH.

THE EXHAUST FAN SHALL BE CONTROLLED THROUGH A WALL SWITCH. WHEN THE SWITCH IS ENABLED THE EXHAUST FAN SHALL BE ENABLED AND RUN CONTINUOUSLY. WHEN THE SWITCH IS DISABLED THE EXHAUST FAN SHALL BE DISABLED.

THIS SYSTEM IS STANDALONE AND NOT CONTROLLED BY THE DDC SYSTEM.

GENERAL EXHAUST FAN SEQUENCE OF OPERATION

(EF-1, EF-2, & EF-3)

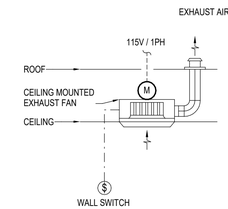

GENERAL EXHAUST FAN CONTROL SCHEMATIC

(EF-1, EF-2, & EF-3)

GENERAL :
THE FORCED AIR ELECTRIC HEATER SYSTEM CONSISTS OF AN ELECTRIC UNIT HEATER WITH A SUPPLY FAN AND ELECTRIC HEATING COIL AND A SPACE TEMPERATURE SENSOR. THE CONTROL CONTRACTOR SHALL PROVIDE A NEW CONTROL PACKAGE DEDICATED TO THE COMPLETE OPERATION OF THE SYSTEM .

HEAT MODE OF OPERATION :
THE HEATING SYSTEM SHALL BE ENABLED WHENEVER THE FOLLOWING CONDITION EXISTS:

1. THE SPACE TEMPERATURE DECREASES BELOW THE SPACE HEATING SET POINT.

WHEN THE ABOVE CONDITION EXISTS THE THERMOSTAT SHALL SEQUENCE THE FOLLOWING:

1. SEND AN ENABLE COMMAND TO THE UNIT HEATER TO RUN CONTINUOUSLY.
   a. VALIDATE THE STATUS OF THE UNIT THROUGH A CURRENT SENSING RELAY.
      1) IF THE HEATER FAILS TO RUN, AN ALARM OF THE EVENT SHALL BE SENT TO THE OPERATOR'S WORKSTATION.

THE HEATING MODE OF OPERATION SHALL BE DISABLED WHENEVER THE FOLLOWING CONDITION EXISTS:

1. THE SPACE TEMPERATURE REACHES 2°F ABOVE THE SPACE HEATING SET POINT.

WHEN THE ABOVE CONDITION EXISTS THE THERMOSTAT SHALL SEQUENCE THE FOLLOWING:

1. SEND AN DISABLE COMMAND TO THE UNIT HEATER.
   a. VALIDATE THE STATUS OF THE UNIT THROUGH A CURRENT SENSING RELAY.
      1) IF THE HEATER FAILS TO STOP, AN ALARM OF THE EVENT SHALL BE SENT TO THE OPERATOR'S WORKSTATION.

THE SPACE TEMPERATURE HEATING SET POINT SHALL BE SET AT 60°F (ADJUSTABLE).

THE ELECTRIC HEATER FAN SHALL HAVE A MINIMUM OPERATION TIME OF 5 MINUTES (ADJUSTABLE).

SAFETIES:
1. IF THE SPACE TEMPERATURE FALLS BELOW 50°F (ADJUSTABLE) FOR A PERIOD OF 5 MINUTES (ADJUSTABLE), AN ALARM OF THE EVENT SHALL BE SENT TO THE OPERATOR'S WORKSTATION.

ELECTRIC UNIT HEATER SEQUENCE OF OPERATION

(EH-5)

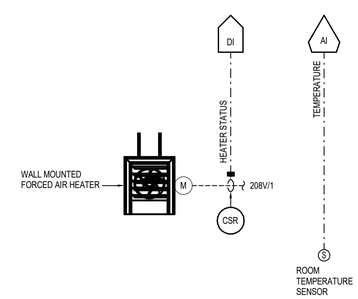

ELECTRIC UNIT HEATER CONTROL SCHEMATIC

(EH-5)

MUSGROVE ENGINEERING, P.A.
234 S. Whisperwood Way
Boise, ID 83709
208.384.0585
645 West 25th Street
Idaho Falls, ID 83402
208.523.2862
www.musgroveepa.com
Project No. 23-239

PROFESSIONAL ENGINEER LICENSED 16683 5/14/2024 STATE OF IDAHO CHRISTOPHER DYKE

MILLER STAUFFER ARCHITECTS
601 E. FRONT AVE., STE 201
COEUR D' ALENE, IDAHO 83814
P 208.664.1773 F 208.667.3174
WWW.MILLERSTAUFFER.COM

MECHANICAL CONTROL

BID SET

5/13/2024

LICENSED ARCHITECT AR-984931 MICHEAL P. WALKER STATE OF IDAHO

D-1 Testing Laboratory
600 W Prairie Ave
Coeur d'Alene, ID 83814

No.	Description	Date

PROJECT NUMBER 23239
PRINCIPAL Designer
PROJECT MANAGER Author

M6.5

5/14/2024 9:48:22 AM Autodesk Docs://ITD D-1 Laboratory/23239 ITD D1 Lab MEP _r23.rvt

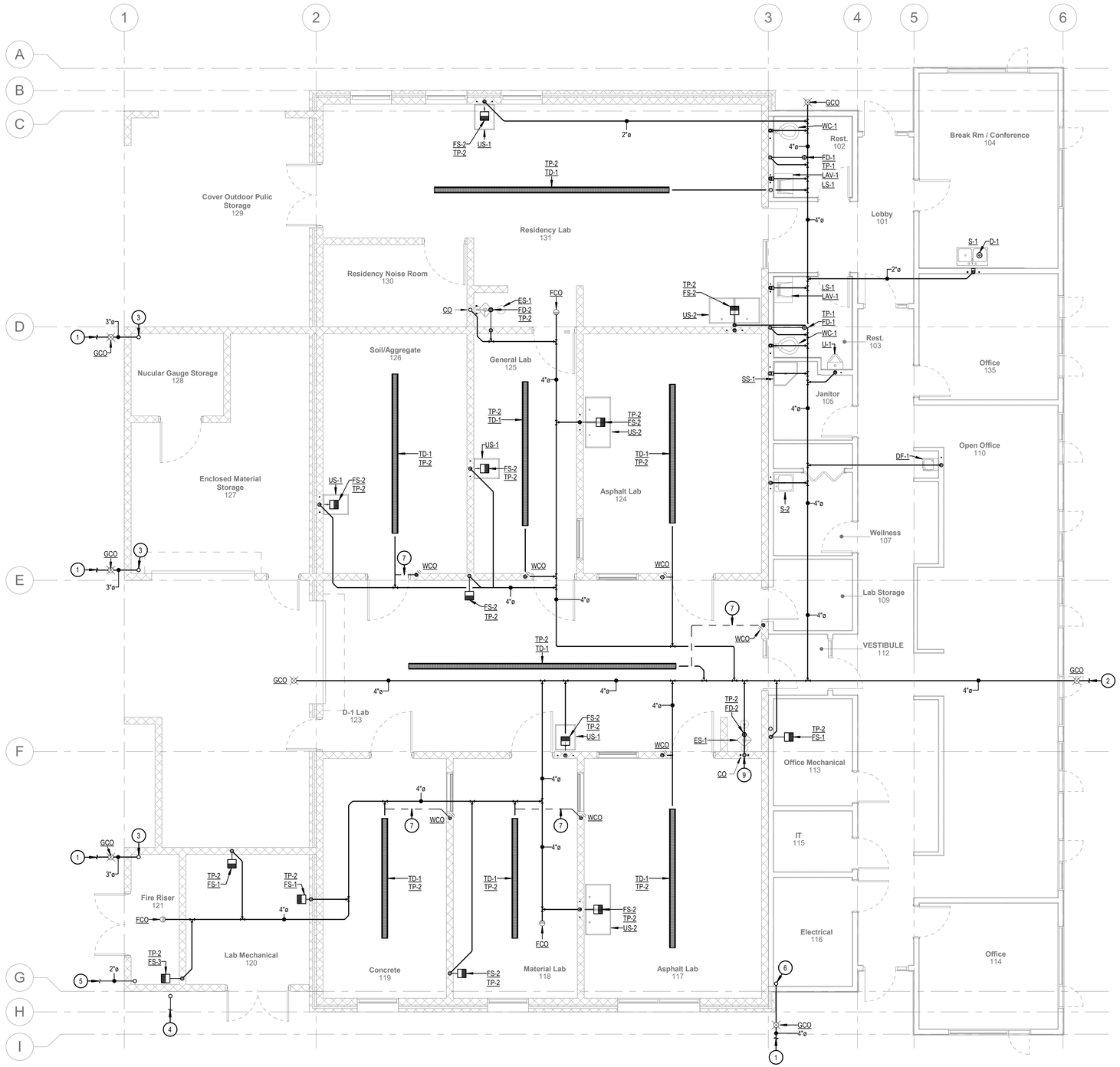

PLUMBING FOUNDATION PLAN

3/16" = 1'-0"

MUSGROVE ENGINEERING, P.A.
234 S. Whisperwood Way
Boise, ID 83709
208.384.0585
645 West 25th Street
Idaho Falls, ID 83402
208.523.2862
www.musgroveepa.com

Project No. 23-239

PROFESSIONAL ENGINEER LICENSED 16683 5/14/2024 STATE OF IDAHO CHRISTOPHER DYKE

KEYED NOTES:

(#) SYMBOL USED FOR CALLOUT

1. STORM LINE LEAVING BUILDING AT 30" BFF. SEE CIVIL SITE PLAN FOR CONTINUATION.
2. THE WASTE LINE INVERT ELEVATION AT THIS LOCATION IS 54" BELOW FINISHED FLOOR (BFF). THE INVERT ELEVATION IS BASED ON A STARTING POINT OF 24 INCHES BFF WITH A LINE SLOPE OF 1/4" PER FOOT. SEE CIVIL SITE PLAN FOR CONTINUATION.
3. ROUTE 3" RD FROM ABOVE. SEE PLUMBING FLOOR PLAN FOR CONTINUATION.
4. GAS LINE FROM INTERMOUNTAIN GAS COMPANY. SEE CIVIL DRAWINGS FOR CONTINUATION.
5. 2" DOMESTIC WATER LINE ROUTED FROM NEW 1-1/2-INCH WATER METER. SEE CIVIL PLANS FOR CONTINUATION.
6. ROUTE 4" RD FROM ABOVE. SEE PLUMBING FLOOR PLAN FOR CONTINUATION.
7. ROUTE VENT FROM TRENCH DRAIN UNDERGROUND.
9. ROUTE 1-1/4" WASTE FROM ES-1 AND COMBINE WITH 4" WASTE FROM FD-2.

MILLER STAUFFER ARCHITECTS
601 E. FRONT AVE., STE 201
COEUR D' ALENE, IDAHO 83814
P 208.664.1773 F 208.667.3174
WWW.MILLERSTAUFFER.COM

FOUNDATION PLUMBING PLAN

BID SET

5/13/2024

D-1 Testing Laboratory
600 W Prairie Ave
Coeur d'Alene, ID 83814

LICENSED ARCHITECT AR-984931 MICHEAL P. WALKER STATE OF IDAHO

No.	Description	Date

PROJECT NUMBER 23239
PRINCIPAL TN
PROJECT MANAGER CD

P1.0

5/14/2024 9:48:25 AM Autodesk Docs://ITD D-1 Laboratory/23239 ITD D1 Lab MEP_r23.rvt

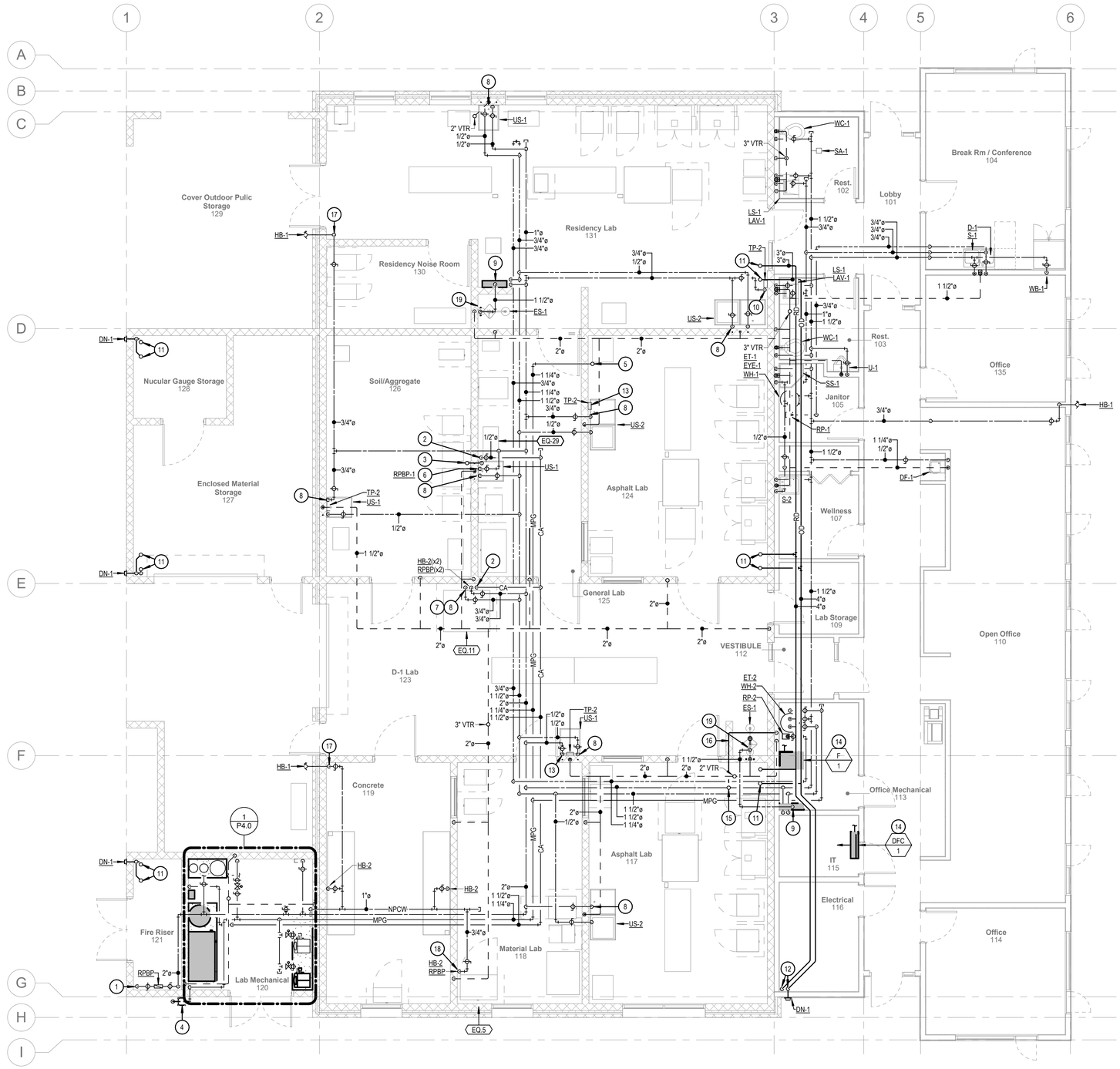

PLUMBING FLOOR PLAN

3/16" = 1'-0"

MUSGROVE ENGINEERING, P.A.
234 S. Whisperwood Way
Boise, ID 83709
208.384.0585
645 West 25th Street
Idaho Falls, ID 83402
208.523.2862
www.musgroveepa.com

Project No. 23-239

PROFESSIONAL ENGINEER LICENSED 16683 5/14/2024 STATE OF IDAHO CHRISTOPHER DYKE

KEYED NOTES:

(#) SYMBOL USED FOR CALLOUT

1. ROUTE 2" WATER LINE UP FROM FLOOR BELOW. SEE FOUNDATION PLUMBING PLAN FOR CONTINUATION.
2. ROUTE 1/2" CA LINE DOWN WALL AND CONNECT TO LAB EQUIPMENT. COORDINATE LAB EQUIPMENT LOCATION PRIOR TO FINAL INSTALLATION.
3. ROUTE 2" DRAIN FROM AHU ON ROOF. TERMINATE INDIRECTLY AT FLOOR SINK.
4. GAS METER FURNISED AND INSTALLED BY LOCAL GAS COMPANY. REFER TO GAS SIZING CHART FOR ADDITIONAL INFORMATION.
5. ROUTE GAS LINE UP THROUGH ROOF TO UNIT ON ROOF. SEE ROOF PLAN FOR CONTINUATION.
6. ROUTE 1/2" HW FROM US-1 TO RPBP AND CONNECT TO EQ-29. TERMINATE RPBP DRAIN AT FLOOR SINK UNDER US-1.
7. ROUTE 3/4" CW & HW DOWN TO RPBP'S. CONNECT TO LAB EQUIPMENT AS REQUIRED.
8. ROUTE EXPOSED CW & HW PIPING DOWN WALL TO PLUMBING FIXTURE. SUPPORT PIPE ON WALL WITH BRACKETS.
9. ROUTE CW & HW PIPING DOWN WALL TO EMERGENCY SHOWER TEMPERING STATION. COORDINATE TEMPERING STATION WITH OTHER TRADES ON WALL PRIOR TO INSTALLATION.
10. ELECTRONIC TRAP PRIMER LOCATED ON WALL. ROUTE 3/4" CW TO TRAP PRIMER AND UNDERGROUND TRAP PRIMER PIPING TO FIXTURES PER DETAIL.
11. ROUTE 3" RD & OD FROM ROOF ABOVE. SEE PLUMBING ROOF PLAN FOR CONTINUATION.
12. ROUTE 4" RD & OD DOWN WALL IN ELECTRICAL ROOM. COORDINATE ROUTING WITH ELECTRICAL PANELS TO MAINTAIN ELECTRICAL CLEARANCE REQUIREMENTS.
13. ELECTRONIC TRAP PRIMER LOCATED ON WALL. ROUTE 3/4" CW FROM UTILITY SINK TO TRAP PRIMER AND UNDERGROUND TRAP PRIMER PIPING TO FIXTURES PER DETAIL.
14. ROUTE CONDENSATE DRAIN TO NEAREST FLOOR SINK AND TERMINATE INDIRECTLY.
15. ROUTE 1" CW UP TO ROOF HYDRANT ON ROOF ABOVE. SEE ROOF PLAN FOR CONTINUATION. PROVIDE WITH MANUAL SHUTOFF VALVE BELOW CEILING.
16. ROUTE DRAIN FROM ROOF HYDRANT TO FLOOR SINK IN OFFICE MECHANICAL 113.
17. ROUTE EXPOSED CW DOWN WALL. COORDINATE WITH ALL OTHER TRADES PRIOR TO FINAL INSTALLATION.
18. ROUTE EXPOSED NPCW DOWN AND CONNECT TO LAB EQUIPMENT AS REQUIRED.
19. ROUTE EXPOSED 1-1/2" TEMPERED WATER TO EMERGENCY SHOWER.

LAB EQUIPMENT LIST

TAG	EQUIPMENT NAME	MOUNTING	COLD WATER	HOT WATER	WASTE	AIR	OWNER SUPPLIED	CONSTRUCTION MANAGER SUPPLIED	INSTALLED BY	EXISTING	NEW	QTY
EQ1	AGGREGATE WASH	COUNTER					Y		ITD	2		2
EQ2	ASPHALT BATH WITH OWNER PROVIDED SHELF ABOVE	IN SINK					Y		ITD	1	3	4
EQ3	CONCRETE BATH	STAND					N	Y	Contractor		2	2
EQ4	NOT USED											1
EQ5	CONCRETE GRINDER	FLOOR	1/2"		INDIRECT		Y		ITD	1		1
EQ6	CONVECTION OVEN	36" COUNTER					Y		ITD	4		4
EQ7	FORNEY COMPRESSION MACHINE	FLOOR					Y		ITD	1		1
EQ8	GILSON PORTA SCREEN	FLOOR					Y		ITD	1		1
EQ9	GILSON TESTING SCREEN	FLOOR					Y		ITD	1		1
EQ10	GREVE BENCH OVEN	36" COUNTER					Y		ITD		6	6
EQ11	HAMBURG WHEEL TRACKER	FLOOR	1/2"	1/2"	INDIRECT	1/2"	Y		ITD		1	1
EQ12	HEATED TABLE	FLOOR					Y		ITD		3	3
EQ13	IDEAL CT	COUNTER					Y		ITD		1	1
EQ14	INFRATEST EXTRACTOR	FLOOR				1/2"	Y		ITD		1	1
EQ15	INSTROTECK CORELOK	26" COUNTER					Y		ITD	1	2	3
EQ16	INSTROTEK CORIDRY	26" COUNER					Y		ITD	1	2	3
EQ17	LAB BBQ	OUTDOORS					Y		ITD	1		1
EQ18	MARY ANN LABORATORY SIFTER	FLOOR					Y		ITD	2	2	4
EQ19	NCAT LAB OVEN	36" COUNTER					Y		ITD	4	2	6
EQ20	PINE GYRATORY COMPACTOR	FLOOR					Y		ITD	2	1	3
EQ21	PLOOD COMPACTOR	BOLT TO CONCRETE					Y		ITD	1		1
EQ22	PROCTOR BLOCK	FLOOR					Y		ITD	2		2
EQ23	RICE TABLE (GILSON VIBRO-DEAIRATOR, PUMP SAVER, AUTORICE CONTROLLER, SMALL COMPRESSOR) WITH OWNER PROVIDED SHELF/STAND	36" COUNTER					Y		ITD	2	1	3
EQ24	ROTARY EVAPORATOR	36" COUNTER					Y		ITD		1	1
EQ25	S.E. SYSTEM	36" COUNTER					Y		ITD	2		2
EQ26	SAW	FLOOR					Y		ITD	1		1
EQ27	SCALE	COUNTER					Y		ITD	4		4
EQ28	THERMO CHILLER	36" COUNTER					Y		ITD		1	1
EQ29	ULTRASONIC CLEANER	COUNTER	Y				Y		ITD	1		1

MILLER STAUFFER ARCHITECTS
601 E. FRONT AVE., STE 201
COEUR D' ALENE, IDAHO 83814
P 208.664.1773 F 208.667.3174
WWW.MILLERSTAUFFER.COM

PLUMBING FLOOR PLAN

BID SET

5/13/2024

LICENSED ARCHITECT AR-984931 MICHEAL P. WALKER STATE OF IDAHO

D-1 Testing Laboratory
600 W Prairie Ave
Coeur d'Alene, ID 83814

No.	Description	Date

PROJECT NUMBER 23239
PRINCIPAL TN
PROJECT MANAGER CD

P2.0

5/14/2024 9:48:26 AM Autodesk Docs://ITD D-1 Laboratory/23239 ITD D1 Lab MEP_r23.rvt

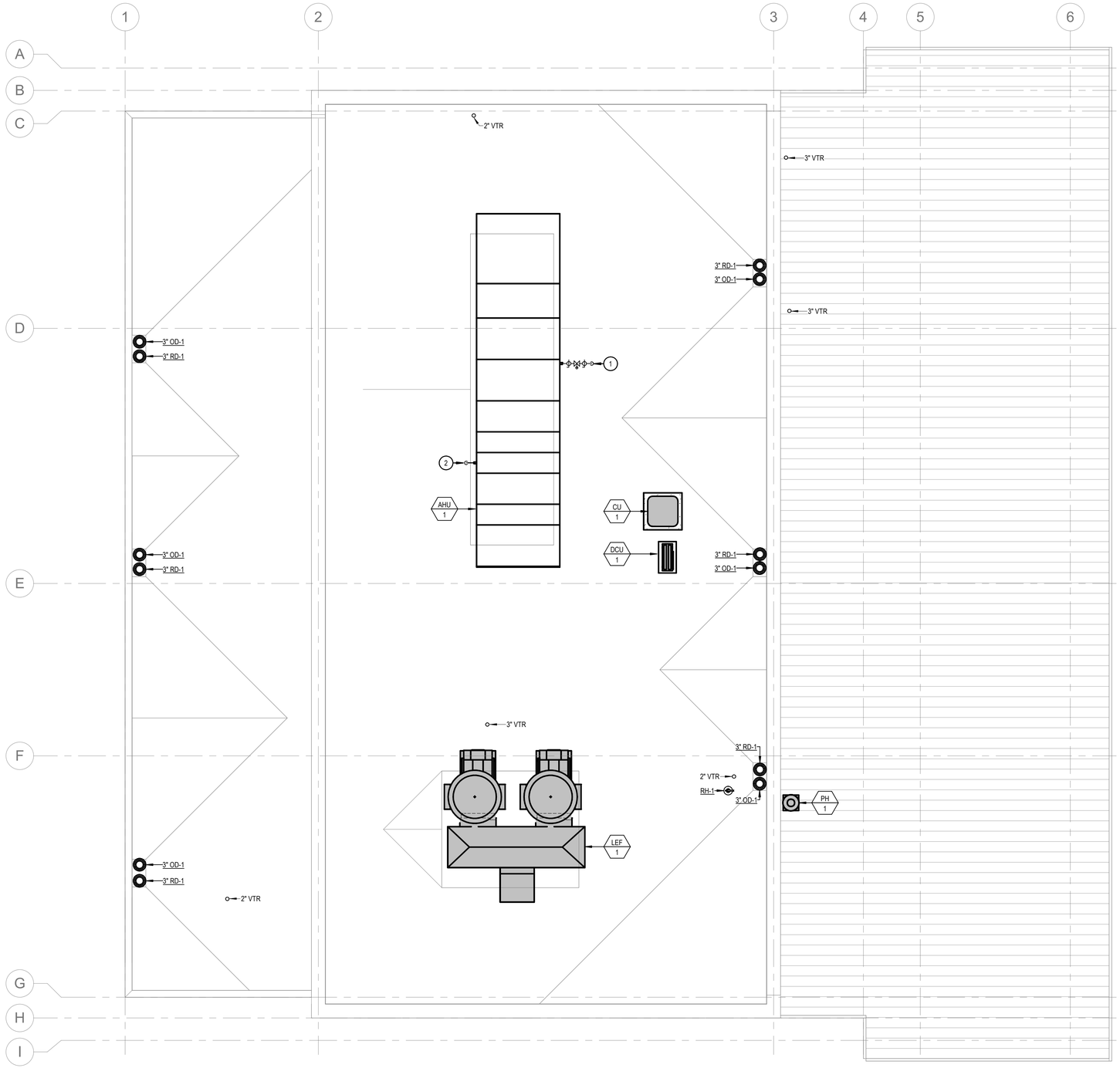

PLUMBING ROOF PLAN

3/16" = 1'-0"

MUSGROVE
ENGINEERING, P.A.
234 S. Whispenwood Way
Boise, ID 83709
208.384.0585
645 West 25th Street
Idaho Falls, ID 83402
208.523.2862
www.musgroveepa.com

Project No. 23-239

KEYED NOTES:

(#) SYMBOL USED FOR CALLOUT

1. ROUTE 1-1/4" MPG LINE UP THROUGH ROOF AND CONNECT TO AHU. SEE GAS PIPING CONNECTION DETAILS FOR INSTALLATION REQUIREMENTS. SEE PLUMBING FLOOR PLAN FOR CONTINATUON.
2. ROUTE 2" DRAIN DOWN THROUGH ROOF TO FLOOR BELOW. SEE PLUMBING FLOOR PLAN FOR CONTINUATION.

PROFESSIONAL ENGINEER
LICENSED
16683
5/14/2024
STATE OF IDAHO
CHRISTOPHER DYKE

MILLER STAUFFER ARCHITECTS
601 E. FRONT AVE., STE 201
COEUR D' ALENE, IDAHO 83814
P 208.664.1773 F 208.667.3174
WWW.MILLERSTAUFFER.COM

PLUMBING ROOF PLAN

BID SET

5/13/2024

D-1 Testing Laboratory
600 W Prairie Ave
Coeur d'Alene, ID 83814

LICENSED ARCHITECT
AR-984931
MICHEAL P. WALKER
STATE OF IDAHO

No.	Description	Date

PROJECT NUMBER 23239
PRINCIPAL TN
PROJECT MANAGER CD

P3.0

5/14/2024 9:48:27 AM Autodesk Docs://ITD D-1 Laboratory/23239 ITD D1 Lab MEP_r23.rvt

MUSGROVE
ENGINEERING, P.A.
234 S. Whispenwood Way
Boise, ID 83709
208.384.0585
645 West 25th Street
Idaho Falls, ID 83402
208.523.2862
www.musgroveepa.com
Project No. 23-239

PROFESSIONAL ENGINEER
LICENSED
16683
5/14/2024
STATE OF IDAHO
CHRISTOPHER DYKE

KEYED NOTES:

(#) SYMBOL USED FOR CALLOUT

1. ROUTE 1" CW DOWN TO RPBP. ROUTE FROM RPBP UP ABOVE CEILING AND OVER TO NON-POTABLE PLUMBING FIXTURES.
2. SEE COMPRESSOR PIPING DETAIL FOR INSTALLATION REQUIREMENTS.
3. SEE WATER SOFTENER PIPING DETAIL FOR INSTALLATION REQUIREMENTS.
4. GAS METER FURNISED AND INSTALLED BY LOCAL GAS COMPANY. REFER TO GAS SIZING CHART FOR ADDITIONAL INFORMATION.
5. SEE FLOOR PLANS FOR CONTINUATION.
6. ELECTRONIC TRAP PRIMER LOCATED ON WALL. ROUTE UNDERGROUND TRAP PRIMER PIPING TO FIXTURES PER DETAIL.
7. ROUTE 1" CW TO WATER SOFTENER. SEE WATER SOFTENER PIPING DETAIL FOR INSTALLATION REQUIREMENTS.
8. ROUTE 1" CW TO HUMIDIFIER.
9. ROUTE MPG LINE TO BOILER. SEE GAS CONNECTION DETAILS FOR INSTALLATION REQUIREMENTS.
10. ROUTE 3/4" CW TO AIR SEPARATOR WITH METER. SEE HYDRONIC HOT WATER PIPING SCHEMATIC FOR MORE INFORMATION.

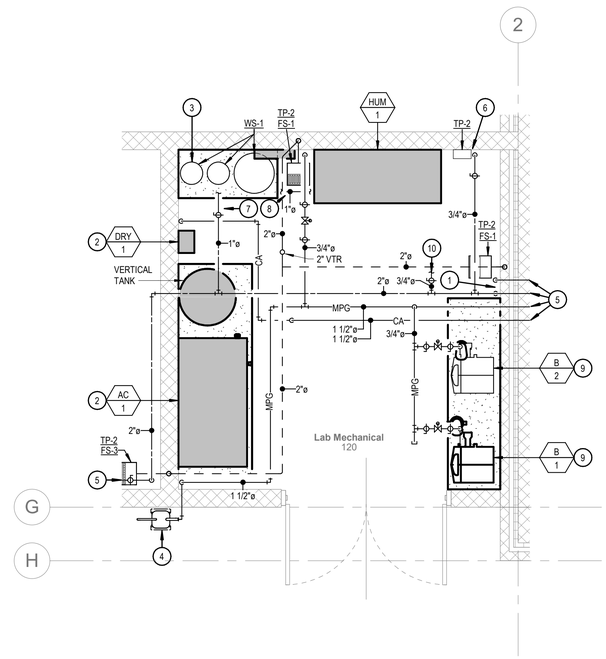

1 ENLARGED MECHANICAL ROOM PLUMBING PLAN
3/8" = 1'-0"

MILLER STAUFFER ARCHITECTS
601 E. FRONT AVE., STE 201
COEUR D' ALENE, IDAHO 83814
P 208.664.1773 F 208.667.3174
WWW.MILLERSTAUFFER.COM

ENLARGED PLUMBING PLAN
BID SET
5/13/2024

D-1 Testing Laboratory
600 W Prairie Ave
Coeur d'Alene, ID 83814

LICENSED ARCHITECT
AR-984931
MICHEAL P. WALKER
STATE OF IDAHO

No.	Description	Date

PROJECT NUMBER 23239
PRINCIPAL TN
PROJECT MANAGER CD

P4.0

5/14/2024 9:48:28 AM Autodesk Docs://ITD D-1 Laboratory/23239 ITD D1 Lab MEP_r23.rvt

MUSGROVE
ENGINEERING, P.A.
234 S. Whisperwood Way
Boise, ID 83709
208.384.0585
645 West 25th Street
Idaho Falls, ID 83402
208.523.2862
www.musgrovepa.com
Project No. 23-239

PROFESSIONAL ENGINEER
LICENSED
16683
5/14/2024
STATE OF IDAHO
CHRISTOPHER DYKE

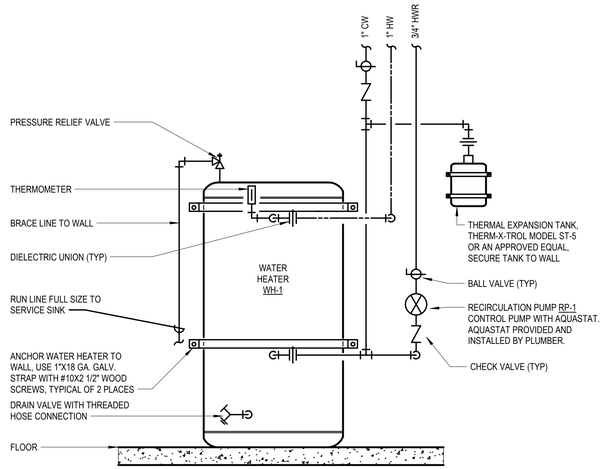

1 ELECTRIC WATER HEATER DETAIL
NTS

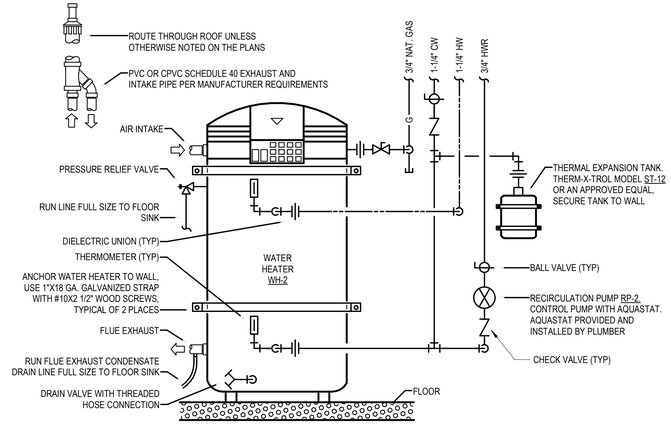

2 WATER HEATER DETAIL (GAS - HIGH EFFICIENT)
NTS

NOTE:

1. THE PLUMBING CONTRACTOR IS RESPONSIBLE FOR ALL BACKFLOW DEVICES TO BE INSPECTED BY A CERTIFIED BACKFLOW TECHNICIAN BEFORE THE USE OF THE BUILDING POTABLE WATER SYSTEM.
2. THIS SYSTEM IS FOR INDOOR INSTALLATIONS ONLY. THIS VALVE SHALL BE EASILY ACCESSIBLE TO FACILITATE TESTING AND SERVICING. DO NOT INSTALL IN A CONCEALED LOCATION.

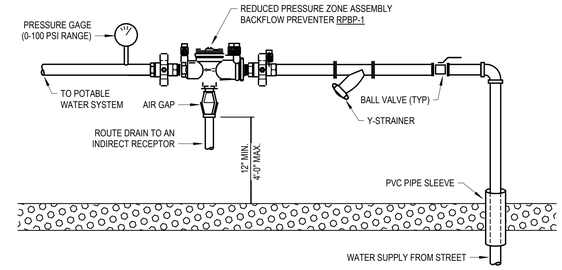

3 BUILDING WATER SERVICE DETAIL
NTS

FLUSH VALVE TRAP PRIMER NOTES:

1. THE FLUSH VALVE PRIMER IS DESIGNED TO PRIME ONE FLOOR DRAIN TRAP AT A DISTANCE NOT TO EXCEED 20 FEET FROM POINT OF INSTALLATION.
2. THE FLUSH VALVE PRIMER SHALL BE INSTALLED WITH A VACUUM BREAKER.
3. FLUSH VALVE PRIMER IS INTENDED FOR USE WITH WATER CLOSETS CONSUMING 3.5 TO 1.0 GAL/FLUSH.
4. TRAP PRIMER SHALL BE PRECISION PLUMBING PRODUCTS MODEL FVP-1VB WITH VACUUM BREAKER. APPROVED ALTERNATES: MIFAB, SIOUX CHIEF, AND ZURN.

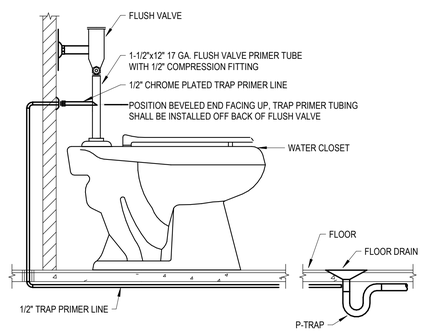

4 TRAP PRIMER CONNECTION DETAIL (FLUSH VALVE)
NTS

ELECTRIC TRAP PRIMER NOTES:

1. THE ELECTRONIC TRAP PRIMER IS DESIGNED TO PRIME FOUR FLOOR DRAIN TRAPS.
2. UNIT MUST BE INSTALLED PLUMB AND MUST BE INSTALLED WITH ACCESS.
3. THE PRIMING ASSEMBLY MUST BE MOUNTED ABOVE THE FINISHED FLOOR. THE PRIMING VALVE MAKEUP LINE TO FLOOR DRAIN SHALL BE A MINIMUM OF 12" OFF THE FINISHED FLOOR BEFORE A 90° ELBOW CAN BE INSTALLED.
4. PROVIDE A 3/4" CW LINE TO THE INLET BALL VALVE.
5. CONNECT APPROPRIATELY SIZED (3/8" OR 1/2" ID) COPPER SUPPLY LINES TO THE MANIFOLD.
6. ALL WIRING MUST BE IN ACCORDANCE WITH LOCAL AND NATIONAL ELECTRICAL CODES.
7. TRAP PRIMER SHALL BE PRECISION PLUMBING PRODUCTS MODEL PTS-4 OR AN APPROVED EQUAL.

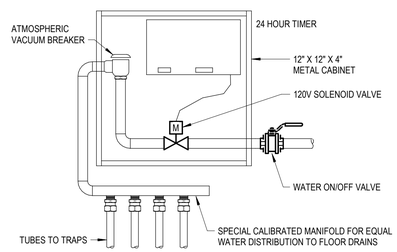

5 TRAP PRIMER CONNECTION DETAIL (ELECTRIC SOLENOID)
NTS

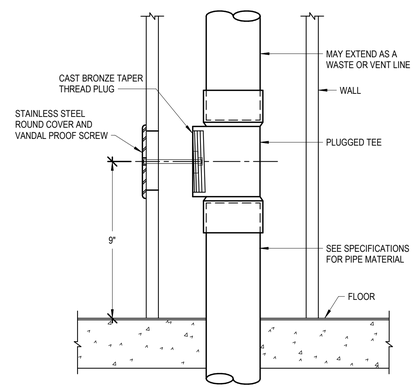

6 WALL CLEANOUT (WCO) DETAIL
NTS

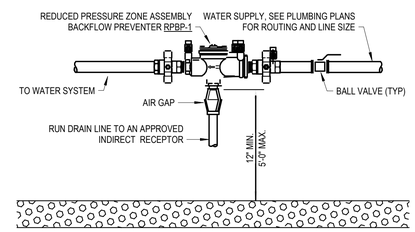

7 REDUCED PRESSURE BACKFLOW PREVENTER DETAIL
NTS

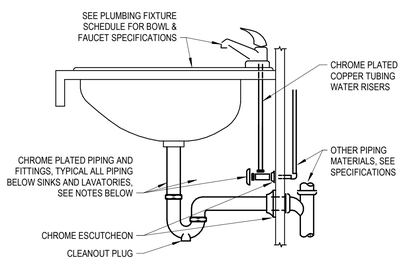

NOTES:

A. INTERIOR EXPOSED PIPE, VALVES AND FIXTURE TRIM, INCLUDING TRIM BEHIND CASEWORK DOORS SHALL BE CHROME PLATED.
B. ALL PIPING PENETRATIONS THROUGH FINISHED WALLS SHALL BE PROVIDED WITH CHROME ESCUTCHEONS.
C. ALL SINK TRAPS SHALL BE PROVIDED WITH A CLEANOUT PLUG IN THE BOTTOM OF THE TRAP.
D. ALL PLUMBING FIXTURES SHALL BE CAULKED AND SEALED TO SURROUNDING SURFACES.

8 SINK/LAVATORY TAILPIECE & TRAP DETAIL
NTS

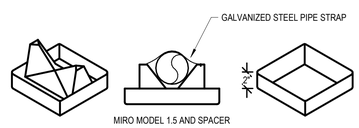

NOTE: ALL GAS PIPING SHALL BE SUPPORTED 6" MINIMUM ABOVE ROOF STRUCTURE

APPROVED PIPE SUPPORT SYSTEMS:

- MIRO MODEL 1.5 WITH SPACERS
- ADVANCED SUPPORT PRODUCTS
- VERSABLOCK BY FREEDOM INC

PIPE SUPPORT REQUIREMENTS	
SIZE OF PIPE	SUPPORT REQUIRED
1/2"	6' O.C.
3/4" - 1"	8' O.C.
1-1/4" OR LARGER	10' O.C.

9 ROOF MOUNTED PIPING SUPPORT DETAIL
NTS

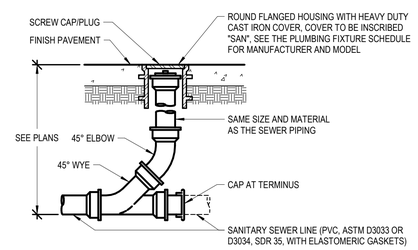

VEHICULAR TRAFFIC AREAS / PAVED AREAS

10 GRADE CLEANOUT (GCO) DETAIL
NTS

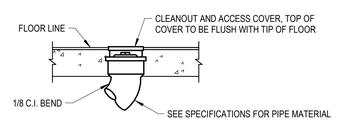

NOTE:
CLEANOUTS SHALL BE PROVIDED AT EACH HORIZONTAL DRAINAGE PIPE AT ITS UPPER TERMINAL, AND EACH RUN OF PIPING WHICH IS MORE THAN 100 FEET, AND SHALL BE PROVIDED FOR EACH 100 FEET DEVELOPED LENGTH, OR FRACTION THEREOF OF SUCH PIPING. AN ADDITIONAL CLEANOUT SHALL BE PROVIDED FOR EACH AGGREGATE HORIZONTAL CHANGE OF DIRECTION EXCEEDING ONE HUNDRED THIRTY-FIVE DEGREES, PER APPLICABLE PLUMBING CODE. THIS SHALL BE PROVIDED REGARDLESS OF WHAT IS SHOWN ON THE DRAWINGS.

11 FLOOR CLEANOUT (FCO) DETAIL
NTS

MILLER STAUFFER ARCHITECTS
601 E. FRONT AVE., STE 201
COEUR D' ALENE, IDAHO 83814
P 208.664.1773 F 208.667.3174
WWW.MILLERSTAUFFER.COM

PLUMBING DETAILS
BID SET
5/13/2024

LICENSED ARCHITECT
AR-984931
MICHEAL P. WALKER
STATE OF IDAHO

D-1 Testing Laboratory
600 W Prairie Ave
Coeur d'Alene, ID 83814

No.	Description	Date

PROJECT NUMBER 23239
PRINCIPAL TN
PROJECT MANAGER CD

P5.0

5/14/2024 9:48:29 AM Autodesk Docs://ITD D-1 Laboratory/23239 ITD D1 Lab MEP_r23.rvt

MUSGROVE
ENGINEERING, P.A.
234 S. Whispertwood Way
Boise, ID 83709
208.384.0585
645 West 25th Street
Idaho Falls, ID 83402
208.523.2862
www.musgrovepa.com
Project No. 23-239

PROFESSIONAL ENGINEER
LICENSED
16683
5/14/2024
STATE OF IDAHO
CHRISTOPHER DYKE

MILLER STAUFFER ARCHITECTS
601 E. FRONT AVE., STE 201
COEUR D' ALENE, IDAHO 83814
P 208.664.1773 F 208.667.3174
WWW.MILLERSTAUFFER.COM

EQUIPMENT CONNECTION NOTES:

1. INSTALL FLEX CONNECTION AT ALL ROOF TOP UNITS WHICH HAVE SPRING ISOLATION CURBS (36" MAXIMUM)
2. INSTALL SOLID PIPE CONNECTION TO ALL ROOF TOP UNITS WHICH DO NOT HAVE SPRING ISOLATION CURBS
3. PAINT PIPE WITH RUST RESISTANT PRIMER, RED OR GRAY. SHERWIN WILLIAMS PRO INDUSTRIAL DTM OR APPROVED EQUAL.

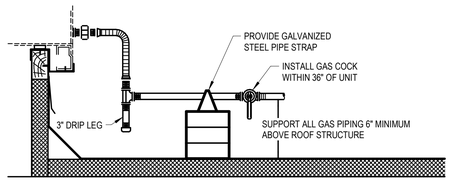

APPROVED PIPE SUPPORT SYSTEMS:

- MIRO MODEL 1.5 WITH SPACERS
- ADVANCED SUPPORT PRODUCTS
- VERSABLOCK BY FREEDOM INC

PIPE SUPPORT REQUIREMENTS	
SIZE OF PIPE	SUPPORT REQUIRED
1/2"	6' O.C.
3/4" - 1"	8' O.C.
1-1/4" OR LARGER	10' O.C.

1 GAS EQUIPMENT CONNECTION DETAIL (ROOFTOP UNIT)
NTS

MINIMUM CLEARANCE DISTANCE TO GAS METER OR REGULATOR VENT:

1. 10-FEET TO WINDOW MOUNTED WALL FAN.
2. 10-FEET TO WINDOW OR WALL MOUNTED AIR CONDITIONER.
3. 10-FEET TO MECHANICAL SYSTEM INTAKE.
4. 3-FEET TO HEATING APPLIANCE AIR INTAKE OR EXHAUST OPENING.
5. 3-FEET TO CLOTHES DRYER INTAKE OR EXHAUST VENT OPENING.
6. 3-FEET TO BATHROOM FAN VENT OPENING.
7. 3-FEET CLEAR IN FRONT OF METER.
8. 3-FEET TO ELECTRICAL GENERATOR OR ELECTRICAL TRANSFORMER.
9. 3-FEET TO ELECTRICAL METERS, ELECTRICAL PANELS AND OTHER SOURCES OF IGNITION.
10. 3-FEET TO AIR CONDITIONER OR HEAT PUMP (PAD MOUNTED).
11. 3-FEET TO OPEN FLAME BARBEQUE OR OTHER OPEN FLAME DEVICE.
12. 2-FEET TO TELEPHONE, CABLE OR OTHER COMMUNICATIONS CONNECTION BOX OR TERMINAL.
13. 2-FEET TO WATER SPIGOT (HOSE BIBB).
14. 2-FEET ON EITHER SIDE OF METER TO LANDSCAPE FEATURES LIKE SHRUBS OR FENCES.
15. 12-INCHES TO ELECTRICAL GROUND ROD.
16. 12-INCHES TO ANY OUTSIDE BUILDING CORNER.

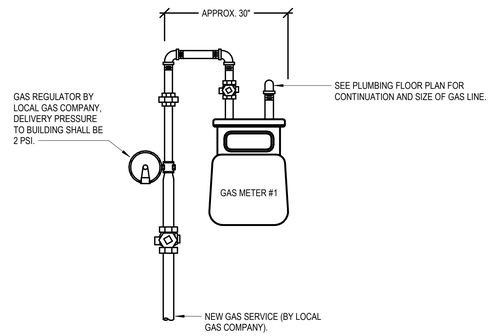

2 GAS METER BANK PIPING DETAIL
NTS

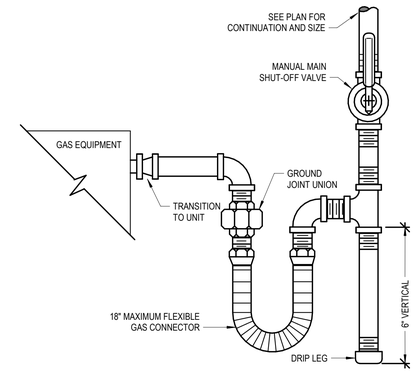

3 GAS EQUIPMENT CONNECTION DETAIL
NTS

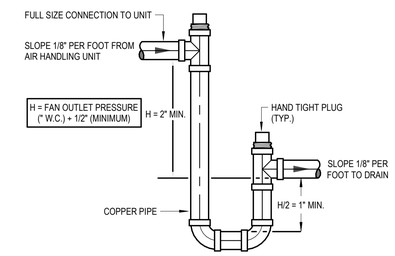

4 DRAW-THRU COIL CONDENSATE DRAIN TRAP DETAIL
NTS

VENTING NOTES:

1. VENT REGULATORS PER MANUFACTURER'S AND LOCAL GAS COMPANY'S REQUIREMENTS.
2. DO NOT REDUCE THE VENT PIPE SIZE FROM THE REGULATOR.
3. TO LIMIT THE CONSEQUENCES OF RAIN, SNOW OR DEBRIS GETTING INTO THE VENT, ALWAYS TURN THE OUTLET OF THE VENT DOWN AND ABOVE POTENTIAL WATER OR SNOW LINES.
4. PROVIDE A BUG SCREEN ON THE VENT OUTLET TO DETER INSECTS FROM NESTING IN THE LINE. NEVER PAINT OVER THE BUG SCREEN.
5. A VENT LINE PROTECTOR MAY BE USED IN OUTDOOR APPLICATIONS TO PREVENT ENTRY OF WATER, INSECTS OR OTHER FOREIGN MATERIALS THAT COULD CAUSE BLOCKAGE.
6. VENT MUST BE PIPED A MINIMUM 3 FEET ABOVE OR 10 FEET AWAY FROM ALL FRESH AIR INTAKES.
7. VENTS SHALL RUN INDEPENDENTLY TO THE OUTDOORS AND SHALL SERVE ONLY A SINGLE DEVICE VENT.
8. REGULATOR VENT PIPING SHALL NOT EXCEED THE LENGTH SPECIFIED IN THE REGULATOR MANUFACTURER'S INSTRUCTIONS.

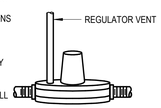

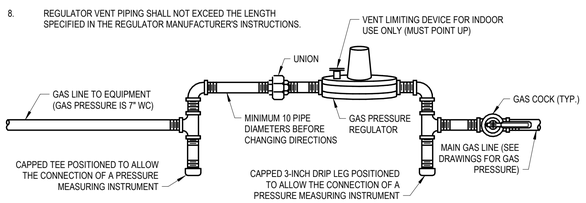

5 GAS PRESSURE REGULATOR DETAIL
NTS

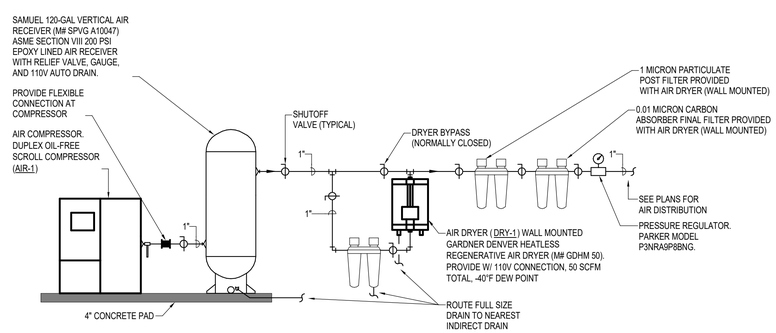

6 COMPRESSOR PIPING DETAIL
NTS

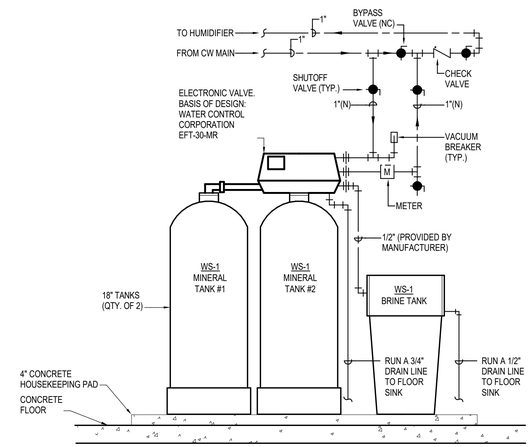

7 WATER SOFTENER PIPING DETAIL
NTS

PLUMBING DETAILS
BID SET
5/13/2024

D-1 Testing Laboratory
600 W Prairie Ave
Coeur d'Alene, ID 83814

LICENSED ARCHITECT
AR-984931
MICHEAL P. WALKER
STATE OF IDAHO

No.	Description	Date

PROJECT NUMBER 23239
PRINCIPAL TN
PROJECT MANAGER CD

P5.1

5/14/2024 9:48:30 AM Autodesk Docs://ITD D-1 Laboratory/23239 ITD D1 Lab MEP_r23.rvt

PLUMBING FIXTURE SCHEDULE

SYMBOL	FIXTURE DESCRIPTION	CONNECTION SIZE WASTE	VENT	TRAP	CW	HW	MANUFACTURER / MODEL NUMBER / DESCRIPTION / ADDITIONAL COMMENTS
D-1	DISPOSER	2	1 1/2	1 1/2	--	--	KOHLER RECKON MODEL K-29358 DISPOSAL: 1-HP, 120-VOLTS, 9.5-AMPS, CONTROLLED BY WALL SWITCH. PROVIDE WITH PRE-WIRED POWER CORD.
DF-1	DRINKING FOUNTAIN WITH BOTTLE FILLING STATION (INTERIOR SINGLE BUBBLER) (ELECTRIC WATER COOLER) (ADA COMPLIANT)	1 1/2	1 1/2	1 1/2	1/2	--	ELKAY MODEL LZS8WSLP (FILTERED) SINGLE ADA COOLER WITH BOTTLE FILLING STATION FURNISHED WITH FLEXI-GUARD SAFETY BUBBLER. BUBBLER ACTIVATED BY PUSHBAR. BOTTLE FILLER ACTIVATED BY ELECTRONIC SENSOR WITH AUTOMATIC 30-SECOND SHUT-OFF TIMER. 115 VOLT, 5.0 AMPS, 60 HERTZ. PROVIDE WITH JAY R. SMITH 0830 FLOOR MOUNTED SUPPORT CARRIER.
DN-1	DOWN SPOUT NOZZLE (CAST IRON)	SEE PLANS	--	--	--	--	JAY R. SMITH FIGURE NUMBER 1770-NB CAST IRON NOZZLE WITH WALL FLANGE, NICKEL-BRONZE FINISH. MOUNT 18" ABOVE FINISHED FLOOR.
DRY-1	REGENERATIVE AIR DRYER FOR COMPRESSOR	--	--	--	--	--	GARDNER DENVER HEATLESS REGENERATIVE COMPRESSED AIR DRYER, MODEL GDHM 50. PROVIDE WITH 110V CONNECTION. RATED AT 50-SCFM AT -40°F DEW POINT.
ES-1	EMERGENCY EYE WASH/ SHOWER COMBINATION (FLOOR MOUNTED) (ADA COMPLIANT)	1 1/2	1 1/2	1 1/4	1 1/4	1 1/4	ACORN SAFETY MODEL S2340-CS1, BARRIER-FREE COMBINATION STATION, STAINLESS STEEL BOWL EYEWASH WITH "CLAM-SHELL" STAINLESS STEEL COVER, STAINLESS STEEL SHOWERHEAD, AND ACORN MODEL ET71-2-BVS-OTG LEAD-FREE EMERGENCY THERMOSTATIC MIXING VALVE WITH 1" NPT INLETS & 1-1/4" OUTLET, 20 GPM @ 10 PSID. PROVIDE WITH LOCKABLE INLET BALL VALVES, STANDARD OUTLET TEMPERATURE GAUGE, AND SELECTABLE TEMPERATURE RANGE FROM 60°F TO 95°F. PROVIDE MIXING VALVE WITH SURFACE MOUNTED CABINET, STAINLESS STEEL FINISH, SOLID DOOR.
ET-1	EXPANSION TANK	--	--	--	3/4	--	AMTROL THERM-X-TROL ST-5, OR APPROVED EQUAL, NON-ASME SERIES THERMAL EXPANSION ABSORBER, ANTI-MICROBIAL LINER, AND 5 YEAR WARRANTY.
ET-2	EXPANSION TANK	--	--	--	3/4	--	AMTROL THERM-X-TROL ST-12, OR APPROVED EQUAL, NON-ASME SERIES THERMAL EXPANSION ABSORBER, ANTI-MICROBIAL LINER, AND 5 YEAR WARRANTY.
EYE-1	EMERGENCY EYE WASH (WALL MOUNTED w/ RECOIL HOSE)	--	--	--	1/2	1/2	ACORN SAFETY MODEL S0406-CH12, WALL MOUNTED WITH DUAL 45° ANGLED HEADS AND RECOIL HOSE, PROVIDE WITH FLIP TOP DUST COVERS, UNIVERSAL EMERGENCY SIGN, DOUBLE CHECK VALVE, STAINLESS STEEL 90° WITH SHEET NIPPLE, AND ACORN MODEL ET71-1-BVS-OTG LEAD-FREE EMERGENCY THERMOSTATIC MIXING VALVE WITH 1/2" NPT INLETS & OUTLET, 4 GPM @ 5 PSID. PROVIDE WITH LOCKABLE INLET BALL VALVES, STANDARD OUTLET TEMPERATURE GAUGE, AND SELECTABLE TEMPERATURE RANGE FROM 60°F TO 95°F.
FCO	FLOOR CLEANOUT	SEE PLANS	--	--	--	--	JAY R. SMITH 4020 SERIES WITH ADJUSTABLE, ROUND NICKEL BRONZE TOP AND ABS PLUG.
FD-1	FLOOR DRAIN (DUCTILE IRON BODY) (CONCRETE FLOOR)	2	2	2	--	--	SIOUX CHIEF SERIES NUMBER 832-25DNR, POST-CONSTRUCTION LEVELING FLOOR DRAIN, NO-HUB OUTLET, 5-1/2" ROUND, ADJUSTABLE NICKEL BRONZE STRAINER AND TRAP PRIMER PORT. INSTALL TOP OF DRAIN 1/8" BELOW FINISH FLOOR AND CAULK EDGE.
FD-2	FLOOR DRAIN (DUCTILE IRON BODY) (CONCRETE FLOOR)	4	2	4	--	--	SIOUX CHIEF SERIES NUMBER 832-4DNR, POST-CONSTRUCTION LEVELING FLOOR DRAIN, NO-HUB OUTLET, 6-1/2" ROUND, ADJUSTABLE NICKEL BRONZE STRAINER AND TRAP PRIMER PORT. INSTALL TOP OF DRAIN 1/8" BELOW FINISH FLOOR AND CAULK EDGE.
FS-1	FLOOR SINK (6" DEEP) (HALF GRATE, FOOT TRAFFIC RATED)	2	2	2	--	--	JAY R. SMITH FIGURE NUMBER 3100Y-12, CAST IRON RECEPTOR, ALUMINUM DOME STRAINER, NICKEL BRONZE GRATE, AND TRAP PRIMER. INSTALL TOP OF SINK 1/8" BELOW FINISH FLOOR AND CAULK EDGE.
FS-2	FLOOR SINK (6" DEEP) (HALF GRATE, FOOT TRAFFIC RATED)	2	2	2	--	--	JAY R. SMITH FIGURE NUMBER 3100Y-12, CAST IRON RECEPTOR, SEDIMENT BUCKET, NICKEL BRONZE GRATE, AND TRAP PRIMER. INSTALL TOP OF SINK 1/8" BELOW FINISH FLOOR AND CAULK EDGE.
FS-3	FLOOR SINK (10" DEEP) (HALF GRATE, FOOT TRAFFIC RATED)	4	2	4	--	--	JAY R. SMITH FIGURE NUMBER 3160Y-12, CAST IRON RECEPTOR, ALUMINUM DOME STRAINER, NICKEL BRONZE GRATE, AND TRAP PRIMER. INSTALL TOP OF SINK 1/8" BELOW FINISH FLOOR AND CAULK EDGE.
GCO	GRADE CLEANOUT (NON-PAVED AREAS)	SEE PLANS	--	--	--	--	JAY R. SMITH 4220 SERIES, ROUND EXTRA HEAVY DUTY CAST IRON TOP. FURNISH WITH WITH ABS PLUG. COVER TO BE INSCRIBED "SAN".
GCO	GRADE CLEANOUT (PAVED AREAS) (VEHICULAR TRAFFIC)	SEE PLANS	--	--	--	--	JAY R. SMITH 4250 SERIES, ROUND FLANGED HOUSING WITH HEAVY DUTY CAST IRON COVER. FURNISH WITH ABS PLUG. COVER TO BE INSCRIBED "SAN".
HB-1	HOSE BIBB (EXTERIOR) (NON-FREEZE)	--	--	--	3/4	--	WOODFORD MODEL 67 - EXPOSED STYLE WITH MODEL 50HA BACKFLOW PREVENTER, 3/4" INLET , AND CHROME PLATED. PROVIDE WITH TEE KEY AND INSTALL AT 18" ABOVE FINISH GRADE.
HB-2	HOSE BIBB (INTERIOR)	--	--	--	1/2	1/2	WOODFORD MODEL V26 WALL FAUCET - EXPOSED STYLE WITH 3/4" MALE HOSE NOZZLE. PROVIDE WITH ANTI-SIPHON INTEGRAL CHECK AND ATMOSPHERIC VENT.
LAV-1	LAVATORY (WALL MOUNTED) (ADA COMPLIANT)	1 1/2	1 1/2	1 1/4	1/2	1/2	KOHLER KINGSTON MODEL K-2005: VITREOUS CHINA, WALL MOUNTED, HOLES ON 4" CENTERS, AND GRID STRAINER. KOHLER CORALAIS MODEL K-15198: 4-1/2" LONG, SINGLE LEVER FAUCET WITH 0.5 GPM AERATOR. PROVIDE WITH JAY R. SMITH FIGURE NUMBER 0700-Z SUPPORT WITH CONCEALED ARMS AND WATTS SERIES LFUSG-B LEAD-FREE, THERMOSTATIC MIXING VALVE, ASSE STANDARD 1070 LISTED, BRONZE BODY, INTEGRAL CHECK VALVES, AND SELECTABLE TEMPERATURE RANGE FROM 80°F TO 120°F. PROVIDE WITH LS-1 LAV SHIELD.
LS-1	LAVATORY SHIELD (WALL MOUNTED SHIELD FOR CONCEALING PIPING, VALVES, AND INSTANTANEOUS WATER HEATERS)	--	--	--	--	--	TRUEBRO "LAV SHIELD", ADA COMPLIANT, TOTAL ENCLOSURE. SINGLE-PIECE CONSTRUCTION AND PRE-CUT TO MATCH LAVATORY FURNISHED BY CONTRACTOR.
OD-1	OVERFLOW ROOF DRAIN (METAL GRATE)	SEE PLANS	--	--	--	--	JAY R. SMITH FIGURE NUMBER 1070Y GENERAL PURPOSE DRAIN WITH LOW PROFILE DOME. PROVIDE WITH SUMP RECEIVER, UNDERDECK CLAMP, CAST IRON DOME, INTERNAL DAM STANDPIPE, AND RAIN SHIELD.
RD-1	ROOF DRAIN (LOW PROFILE DOME STYLE) (METAL GRATE)	SEE PLANS	--	--	--	--	JAY R. SMITH FIGURE NUMBER 1010Y GENERAL PURPOSE DRAIN WITH LOW PROFILE DOME. PROVIDE WITH SUMP RECEIVER, UNDERDECK CLAMP, AND CAST IRON DOME.
RH-1	ROOF HYDRANT (NON-FREEZE)	--	--	--	1	--	WOODFORD MODEL RHY2-MS NON-FREEZE STYLE ROOF HYDRANT WITH 3/4" HOSE CONNECTION AND INTEGRAL DOUBLE CHECK BACKFLOW PREVENTER. REQUIRES 1/8" DRAIN LINE PIPED TO APPROVED INTERCEPTOR.
RP-1	RECIRCULATION PUMP (HOT WATER RETURN SYSTEM) (MEDIUM SIZED SYSTEM)	--	--	--	--	3/4	BELL AND GOSSETT BRONZE MODEL NBF-22, 115 VOLT, 0.8 AMPS, 92 WATTS, AND SHALL PROVIDE 7 GPM AT 10 FEET HEAD. INCLUDE 7-DAY PROGRAMMABLE ELECTRONIC TIME CLOCK WITH BATTERY BACKUP, INTERMATIC MODEL GM40AVE-RD89. APPROVED ALTERNATE: ARMSTRONG, TACO, GRUNDFOS.
RP-2	RECIRCULATION PUMP (HOT WATER RETURN SYSTEM) (MEDIUM SIZED SYSTEM)	--	--	--	--	3/4	BELL AND GOSSETT BRONZE MODEL NBF-22, 115 VOLT, 0.8 AMPS, 92 WATTS, AND SHALL PROVIDE 7 GPM AT 10 FEET HEAD. INCLUDE 7-DAY PROGRAMMABLE ELECTRONIC TIME CLOCK WITH BATTERY BACKUP, INTERMATIC MODEL GM40AVE-RD89. APPROVED ALTERNATE: ARMSTRONG, TACO, GRUNDFOS.
RPBP-1	REDUCED PRESSURE BACKFLOW PREVENTER	INDIRECT			--	--	WATTS SERIES LF009 LEAD-FREE REDUCED PRESSURE ZONE ASSEMBLY WITH QUARTER-TURN BALL VALVES, STRAINER, AND AIR GAP. CAST COPPER BODY CONSTRUCTION - 1/2" THRU 2". PROVIDE SERIES 957 FOR SIZES 2 1/2" THRU 10".
S-1	SINK - DOUBLE COMPARTMENT (14" X 14" X 6 1/2" - EACH) (ADA COMPLIANT)	2	1 1/2	1 1/2	1/2	1/2	KOHLER VERSE MODEL K-5267-1: 9" DEEP, STAINLESS STEEL SINK. PROVIDE AND INSTALL KOHLER MODEL K-7505 SINGLE LEVER CHROME FAUCET WITH SWING SPOUT, KOHLER STAINLESS STEEL STRAINER BASKET AND TAILPIECE, AND WATTS SERIES LFUSG-B LEAD-FREE, THERMOSTATIC MIXING VALVE, ASSE STANDARD 1070 LISTED, BRONZE BODY, INTEGRAL CHECK VALVES, AND SELECTABLE TEMPERATURE RANGE FROM 80°F TO 120°F.
S-2	SINK - SINGLE COMPARTMENT (20" X 20" X 8 1/2") (ADA COMPLIANT)	2	1 1/2	1 1/2	1/2	1/2	KOHLER STACCATO MODEL K-3363-1: 8-1/2" DEEP, STAINLESS STEEL SINK. PROVIDE AND INSTALL KOHLER MODEL K-7505 SINGLE LEVER CHROME FAUCET WITH SWING SPOUT, KOHLER STAINLESS STEEL STRAINER BASKET AND TAILPIECE, AND WATTS SERIES LFUSG-B LEAD-FREE, THERMOSTATIC MIXING VALVE, ASSE STANDARD 1070 LISTED, BRONZE BODY, INTEGRAL CHECK VALVES, AND SELECTABLE TEMPERATURE RANGE FROM 80°F TO 120°F.
SA-1	SHOCK ABSORBER (WATER HAMMER ARRESTOR)	--	--	--	--	--	JAY R. SMITH FIGURE NUMBER 5005 TO 5050, SIZED PER FIXTURES SERVED. PROVIDE AN ACCESS PANEL AND A BALL TYPE SHUT-OFF VALVE UPSTREAM OF SHOCK ABSORBER.
SS-1	SERVICE SINK (28" RADIUS CORNER X 12") (FLOOR MOUNTED)	3	2	3	1/2	1/2	ACORN TERRAZZO-WARE MODEL TCR-28: PROVIDE AND INSTALL WITH MODEL KFC CHROME UTILITY FAUCET, STAINLESS STEEL BUMPER GUARD, DRAIN GASKET, 36" HOSE AND WALL HANGER, MOP HANGER, AND (2) STAINLESS STEEL WALL GUARDS. MOUNT FAUCET 36" AFF.
TD-1	TRENCH DRAIN (6" WIDE) (HEAVY TRAFFIC RATED)	2	2	2	--	--	JAY R. SMITH FIGURE NUMBER 9895, 6" WIDE TRENCH DRAIN SYSTEM WITH INTEGRAL METAL RAIL. PROVIDE WITH END CAPS, OUTLETS, 29" DEEP CATCH BASIN, AND 3/8" SLOTTED, HEAVY DUTY GRATE. RAPID TRENCH C1000 COMMERCIAL SERIES, TRENCH DRAIN INSTALLATION SYSTEM, COMPOSED OF 3-METER TONGUE AND GROOVE STEEL ALIGNMENT FRAME AND SUPPORT BRACKET WITH HORIZONTAL ADJUSTMENT. REFER TO ARCHITECTURAL PLAN FOR EXACT LENGTH REQUIREMENTS.
TP-1	TRAP PRIMER (FLUSH VALVE PRIMER) (1 TRAP)	--	--	--	1/2"	--	PRECISION PLUMBING PRODUCTS MODEL FVP-1VB WITH VACUUM BREAKER. TRAP PRIMER TUBING SHALL BE INSTALLED OFF BACK OF FLUSH VALVE.
TP-2	TRAP PRIMER (ELECTRONIC OPERATED) (4 TRAPS)	--	--	--	3/4"	--	PRECISION PLUMBING PRODUCTS MODEL PTS-4 ELECTRONIC TRAP PRIMING ASSEMBLY WITH ATMOSPHERIC VACUUM BREAKER, 24-HR ADJUSTABLE TIMER, MANUAL OVERRIDE SWITCH AND 120V SOLENOID VALVE.
U-1	URINAL (FLUSH VALVE) (SEE ARCH. FOR MOUNTING HEIGHT)	2	1 1/2	INT.	3/4	--	KOHLER DEXTER MODEL K-PR5452-T1DS WALL MOUNTED URINAL WITH 3/4" TOP SPUD. SLOAN REGAL MODEL 186-0.5 FLUSHOMETER, 0.5 GPF. INCLUDE BEEHIVE STRAINER AND JAY R. SMITH FIGURE NUMBER 0637 ADJUSTABLE FIXTURE SUPPORT.

PLUMBING FIXTURE SCHEDULE

SYMBOL	FIXTURE DESCRIPTION	CONNECTION SIZE WASTE	VENT	TRAP	CW	HW	MANUFACTURER / MODEL NUMBER / DESCRIPTION / ADDITIONAL COMMENTS
US-1	UTILITY SINK - SINGLE COMPARTMENT (24" X 24" X 16") (FLOOR MOUNTED)	2	1 1/2	1 1/2	1/2	1/2	REGENCY STAINLESS STEEL ONE COMPARTMENT COMMERCIAL UTILITY SINK (ITEM # 600S12424SB) WITH ADJUSTABLE LEGS, DRAIN ASSEMBLY AND STOPPER. PROVIDE WITH KROWNE WALL MOUNT 8" CENTER PRE-RINSE WITH ADD-ON FAUCET 12" SPOUT, MODEL 17-109WL. PROVIDE WITH WATTS SERIES LFUSG-B LF, THERMOSTATIC MIXING VALVE, ASSE STANDARD 1070 LISTED, BRONZE BODY, INTEGRAL CHECK VALVES, AND SELECTABLE TEMPERATURE RANGE FROM 80°F TO 120°F.
US-2	UTILITY SINK - DOUBLE COMPARTMENT (30" X 24" X 14") (FLOOR MOUNTED)	2	1 1/2	1 1/2	1/2	1/2	REGENCY STAINLESS STEEL TWO COMPARTMENT COMMERCIAL UTILITY SINK (ITEM # 600S23024SB) WITH ADJUSTABLE LEGS, DRAIN ASSEMBLY AND STOPPER. PROVIDE WITH KROWNE WALL MOUNT 8" CENTER PRE-RINSE WITH ADD-ON FAUCET 12" SPOUT, MODEL 17-109WL. PROVIDE WITH WATTS SERIES LFUSG-B LF, THERMOSTATIC MIXING VALVE, ASSE STANDARD 1070 LISTED, BRONZE BODY, INTEGRAL CHECK VALVES, AND SELECTABLE TEMPERATURE RANGE FROM 80°F TO 120°F.
WB-1	WALL BOX (WATER SUPPLY TO ICE MAKER)	--	--	--	1/2	--	OATEY FIREMASTER MODEL 39121 WITH FACEPLATE AND ADJUSTABLE METAL SUPPORT BRACKETS. FIRE-RATED, LOW LEAD, OR APPROVED EQUAL.
WC-1	WATER CLOSET (15" SEAT HEIGHT) (FLUSH VALVE) (WALL MOUNTED) (COMFORT HEIGHT / ADA COMPLIANT)	4	2	INT.	1	--	KOHLER KINGSTON ULTRA MODEL K-PR84325-T5D WALL MOUNTED WITH ELONGATED BOWL. KOHLER LUSTRA MODEL K-4666-C ELONGATED OPEN FRONT SEAT WITH HINGE. SLOAN REGAL MODEL 111-1.6 FLUSHOMETER, 1.6 GPF. PROVIDE WITH JAY R. SMITH WALL SUPPORT BRACKET.
WCO	WALL CLEANOUT	SEE PLANS	--	--	--	--	JAY R. SMITH 4472T SERIES WITH CAST BRONZE TAPER THREAD PLUG, STAINLESS STEEL ROUND COVER, AND A STAINLESS STEEL VANDAL PROOF SCREW.
WH-1	WATER HEATER (40 GALLON UPRIGHT MODEL) (208V-1Ø ELECTRIC)	--	--	--	SEE PLANS	SEE PLANS	BRADFORD WHITE MODEL LE340S3-3, NON-SIMULTANEOUS DUAL ELEMENTS, (2) 4.0 KW, 208V/1Ø, 22" DIAMETER, 47" TALL, WITH TOP CONNECTIONS. PROVIDE WITH WALL BRACKET SUPPORT AND SEISMIC STRAP. PROVIDE WATER HEATER WITH HEAT TRAP.
WH-2	WATER HEATER (NOMINAL 100 GALLON) (NATURAL GAS - HIGH EFFICIENCY)	--	--	--	SEE PLANS	SEE PLANS	BRADFORD WHITE MODEL EF-100T-199E-3N. 199 MBH INPUT, 110V/1Ø, 1.8 AMPS, 28" DIAMETER, 78" TALL WITH SIDE CONNECTIONS. PROVIDE WITH PVC CONCENTRIC INTAKE/VENT KIT AND SEISMIC STRAP. PROVIDE WATER HEATER WITH HEAT TRAP.
WS-1	WATER SOFTENER SYSTEM	INDIRECT			1	--	WATER CONTROL CORPORATION WATER SOFTENER SYSTEM INCLUDING EFT-30 VALVE WITH (2) 18" TANKS, 1" FPT BYPASS, AND AN 18"X33" BRINE TANK. THE SYSTEM SHALL MEET THE FOLLOWING CRITERIA: EXCHANGE CAPACITY OF 60,000 GRAINS, 12 GPM @ 7 PSI MAX PRESSURE DROP. ELECTRICAL SHALL PROVIDE 120V/1□ GFI PLUG OUTLET.

NOTES:

1. ALL ADA COMPLIANT FIXTURES MUST COMPLY WITH ICC/ANSI A117.1. SEE ARCHITECTURAL PLANS FOR HANDICAPPED FIXTURE DESIGNATIONS, LOCATIONS, CLEARANCES, AND MOUNTING HEIGHTS.
2. ALL EXPOSED HW PIPING, CW PIPING, AND DRAIN LINES BENEATH ALL LAVATORIES AND ALL ADA COMPLIANT SINKS MUST BE INSULATED TO PREVENT INJURY. REFER TO ARCHITECTURAL PLANS. INSULATE WITH MOLDED CLOSED CELL VINYL INSULATION - TRUEBRO, PLUMBEREX, OR EQUAL.
3. PROVIDE P-TRAP PRIMERS FOR ALL FLOOR DRAINS AND FLOOR SINKS (NOT ALL TRAP PRIMERS ARE INDICATED ON PLANS - REFERENCE DETAILS FOR ADDITIONAL INFORMATION). PROVIDE A BALL TYPE SHUT-OFF VALVE UPSTREAM OF PRIMER VALVE. SEE SPECIFICATIONS.
4. SEE SPECIFICATIONS FOR ALTERNATE APPROVED MANUFACTURERS.
5. HIGH EFFICIENCY WATER HEATERS: PROVIDE WITH CONDENSATE NEUTRALIZATION KIT BY JJM BOILER WORKS MODEL JM (OR EQUAL), SIZED PER EQUIPMENT CAPACITY.
6. BACKFLOW PREVENTION: THIS BUILDING IS PROVIDED WITH A REDUCED BACK FLOW PREVENTION DEVICE ON THE MAIN WATER SERVICE.

AIR COMPRESSOR SCHEDULE

SYMBOL	TYPE	SERVICE	PERFORMANCE SCFM	PERFORMANCE PRESSURE (PSIG)	MOTOR HP	MOTOR RPM	MOTOR V/Ø	RECEIVER GALLONS	RECEIVER DIAMETER	RECEIVER LENGTH	OPERATING WEIGHT (LBS)	MANUFACTURER AND MODEL	REMARKS
AC-1	OIL-LESS ROTARY SCROLL	LAB	43	116	7.5	3530	208/3	120	24"	75"	1500	GARDNER DENVER MODEL BENVS15D-Q	1 , 2

REMARKS:

1. APPROVED ALTERNATE MANUFACTURERS: ROGERS MACHINERY & INGERSOLL-RAND.
2. PROVIDE WITH ASME RATED RECEIVER, MAGNETIC MOTOR STARTER, 5 YEAR WARRANTY, PRESSURE REGULATOR, OIL/WATER SEPARATOR, AND AIR DRYER.

GAS SIZING CHART

SYMBOL	INPUT (MBH)	RUNOUT SIZE (2-PSI) (INCHES)	EQUIPMENT CONNECTION SIZES (7" WC) (INCHES)
AIR HANDLING UNIT (AHU-1)	1,125	1-1/4"	1-1/2"
BOILER (B-1)	285	3/4"	1"
BOILER (B-2)	285	3/4"	1"
WATER HEATER (WH-2)	199	3/4"	3/4"
HUMIDIFIER (HUM-1)	368.5	3/4"	1"
TOTAL	2,262.5	EQUIVALENT LENGTH = 150 FT PRESSURE = 2 PSI MAIN SIZE = 1-1/2"Ø	

NOTE: GAS SIZES TO EQUIPMENT ARE AS NOTED IN SCHEDULE ABOVE. ROUTE NOTED (2-PSI) GAS LINE TO GAS EQUIPMENT. PROVIDE GAS COCK AND PRESSURE REGULATOR (2-PSI TO 7" WC) SIZED FOR GAS LOAD AT EACH PIECE OF EQUIPMENT. VENT TO ATMOSPHERE PER MANUFACTURERS RECOMMENDATIONS. ROUTE NOTED (7" WC) GAS LINE TO GAS FIRED EQUIPMENT WITH GAS COCK AND FLEX CONNECTOR AT UNIT. SEE GAS CONNECTION DETAILS.

PLUMBING CALCULATIONS SUMMARY

Musgrove Engineering, P.A.
234 S. Whisperwood Way, Boise, Idaho 83709
Plumbing Calculations Summary

Date: 5/10/2024
Job #: 23-239 — Computed By: CD
Job Name: ITD D1 Lab — Checked By: LP

Plumbing Calculations Summary

Quantity	Fixture	Description	Total FU Count Drainage	Water	HW GPH
1	DF-1	Drinking Fountain	0.5	0.5	--
	DW-1	Dishwasher			
	EYE-1	Emergency Eyewash			
2	EYE-2	Emergency Shower	--	8	--
2	FD-1	Floor Drain (2")	4	--	--
2	FD-2	Floor Drain (4")	16	--	--
3	FS-1	Floor Sink (6")	12	--	--
9	FS-2	Floor Sink (10")	72	--	--
6	HB-1	Hose Bibb	--	8.5	--
2	LAV-1	Lavatory	2	2	12
2	S-1	Sink (kitchen/laundry/bar)	4	4	30
	S-2	Sink (food waste/spec. purpose)			
	SHR-1	Shower			
1	SS-1	Service Sink	3	3	20
	TD-1	Trench Drain (6" wide)			
8	TD-2	Trench Drain (10" wide)	64	--	--
	TUB-1	Bath tub or combo shower			
1	U-1	Urinal	2	20	--
1	WB-1	Wall Box - Ice Maker	--	1	--
	WB-2	Wall Box - Wash Machine (Dome			
	WC-1	Water Closet (Flush Tank)4			
2	WC-2	Water Closet (Flush Valve)4	8	70	--
1	YH-1	Yard Hydrant	--	2.5	--
	Other	Other			
		Total	187.5	119.5	62
		Total GPM For Building	72.85	(GPM)	
		Main Water Pressure	55	(PSI)	
		Water Main Size	2	(In)	
		Water Meter Size	1.5	(In)	
		Hot Water Building Usage Type:		Office Building	

Water Main Sizing

P = Pressure in street main (PSI)	55	(PSI)
H = Height to highest fixture above street (ft.)	15	(ft.)
F = Minimum pressure required at fixture (PSI)	22	(PSI)
Flush Valves in system?	Yes	
Total Water Fixture units	119.5	
Total GPM for building	72.85	(GPM)
Pressure loss in meter (PSI)	6	(PSI)
Pressure loss in backflow device (PSI)	6	(PSI)
M = Pressure loss in meter and Backflow device (PSI)	12	(PSI)
Length from meter to furthest fixture (ft.)	175	(ft.)
L = Total equivalent length + 50% safety factor (ft.)	262.5	(ft.)
Q = Friction loss (PSI)	5.5	(PSI)
Water Service Main Size:	**2**	
Water Meter Size:	**1 1/2"**	(in.)

Waste Line

Depth of first fixture (in.)	18	(in.)
Distance from furthest fixture to civil connection (ft.)	144	(ft.)
Slope (in./ft.)	1/4	(in./ft.)
Drainage F.U. total	187 1/2	
Size of main waste line	**4**	
Invert elevation at civil connection (in.)	**54**	(in.)

Storm Drainage

Slope of storm drain piping (in./ft.)	1/8	(in./ft.)
Rainfall rate (in./hr.)	2.0	(in./hr.)

MUSGROVE ENGINEERING, P.A.
234 S. Whisperwood Way
Boise, ID 83709
208.384.0585
645 West 25th Street
Idaho Falls, ID 83402
208.523.2862
www.musgrovepa.com
Project No. 23-239

PROFESSIONAL ENGINEER LICENSED 16683 5/14/2024 STATE OF IDAHO CHRISTOPHER DYKE

MILLER STAUFFER ARCHITECTS
601 E. FRONT AVE. STE 201
COEUR D' ALENE, IDAHO 83814
P 208.664-1773 F 208.667.3174
WWW.MILLERSTAUFFER.COM

PLUMBING SCHEDULES
BID SET
5/13/2024

D-1 Testing Laboratory
600 W Prairie Ave
Coeur d'Alene, ID 83814

LICENSED ARCHITECT AR-984931 MICHEAL P. WALKER STATE OF IDAHO

No.	Description	Date

PROJECT NUMBER 23239
PRINCIPAL TN
PROJECT MANAGER CD

P6.0

5/14/2024 9:48:30 AM Autodesk Docs://ITD D-1 Laboratory/23239 ITD D1 Lab MEP_r23.rvt

FIRE SPRINKLER FLOOR PLAN

3/16" = 1'-0"

MUSGROVE ENGINEERING, P.A.
234 S. Whisperwood Way
Boise, ID 83709
208.384.0585
645 West 25th Street
Idaho Falls, ID 83402
208.523.2862
www.musgrovepa.com

Project No. 23-239

PROFESSIONAL ENGINEER LICENSED 16683 5/14/2024 STATE OF IDAHO CHRISTOPHER DYKE

KEYED NOTES:

(#) SYMBOL USED FOR CALLOUT

1. FIRE SPRINKLER LINE TO BE SIZED AND INSTALLED BY FIRE SPRINKLER CONTRACTOR. REFER TO SPECIFICATIONS FOR ADDITIONAL FIRE SPRINKLER SYSTEM REQUIREMENTS. SEE CIVIL DRAWINGS FOR CONTINUATION.
2. ROUTE FIRE SPRINKLER LINE UP FROM BELOW FLOOR. SEE FOUNDATION PLUMBING PLAN FOR CONTINUATION.
3. AREA RESERVED FOR FIRE SPRINKLER RISER SYSTEM. FIRE SPRINKLER RISER SYSTEM SHALL INCLUDE A TAMPER SWITCH, FLOW SWITCH, ALARM BELL, FIRE DEPARTMENT CONNECTION, AND POST INDICATOR VALVE (PIV).

FIRE SPRINKLER NOTES:

A. THE FIRE SPRINKLER SYSTEM SHALL BE DESIGNED AND INSTALLED BY THE FIRE SPRINKLER CONTRACTOR. THIS PLAN\ INDICATES GENERAL PARAMETERS THE FIRE SPRINKLER CONTRACTOR MUST DESIGN AND INSTALL AROUND. THE ENGINEER/ARCHITECT/OWNER RESERVES THE RIGHT TO REVIEW AND APPROVE TEST VALVES, ZONING VALVES, FLOW SENSORS, ETC. DURING THE SUBMITTAL PROCESS.

B. FIRE SPRINKLER CONTRACTORS SHALL BE LICENSED BY THE IDAHO STATE FIRE MARSHAL, AND SHALL HAVE IN HIS/HER EMPLOY AND WITHIN 50 MILES OF THE JOB SITE AN ENGINEERING TECHNICIAN (LEVEL III), CERTIFIED BY NICET (NATIONAL INSTITUTE FOR CERTIFICATION IN ENGINEERING TECHNOLOGIES). PROOF OF BOTH MUST BE SUBMITTED TO THE ENGINEER PRIOR TO THE START OF ANY FIRE SPRINKLING DESIGN AND/OR INSTALLATION, NO EXCEPTIONS.

C. ALL WORK REQUIRED FOR THE FIRE PROTECTION SYSTEM SHALL BE THE RESPONSIBILITY OF THE FIRE SPRINKLER CONTRACTOR. THE FIRE SPRINKLER SYSTEM SHALL BE INSTALLED BY THE FIRE SPRINKLER CONTRACTOR AS REQUIRED TO SATISFY THE REQUIREMENTS OF THE LOCAL JURISDICTION AND NFPA 13, LATEST EDITION. ARCHITECT/ENGINEER ASSUMES NO RESPONSIBILITY OR LIABILITY FOR THE DESIGN OF THE FIRE SPRINKLER SYSTEM.

D. REFER TO FIRE SPRINKLER SPECIFICATIONS FOR ADDITIONAL REQUIREMENTS.

E. PROVIDE RECESSED HEADS IN ALL AREAS EXCEPT WHERE ROOM IS OPEN TO STRUCTURE.

F. NO STANDOFF SPRINKLER HEADS (THOSE THAT DROP BELOW CEILING OR SOFFIT TO PROVIDE BETTER COVERAGE) ALLOWED. ALL SPRINKLER HEADS MUST BE FLUSH WITH CEILING OR EXTERIOR SOFFIT.

G. REFERENCE ARCHITECTURAL SECTIONS FOR LOCATION OF BUILDING INSULATION ENVELOPES.

H. PIPE ALL AUXILARY DRAINS TO EXTERIOR OF BUILDING OR APPROVED RECEPTACLE. COORDINATE WITH ARCHITECT.

I. IN COLD SPACES WHERE A NON-FREEZE FIRE SPRINKLER SYSTEM IS REQUIRED, CONTRACTOR SHALL PROVIDE A DRY PIPE SPRINKLER SYSTEM.

MILLER STAUFFER ARCHITECTS
601 E. FRONT AVE., STE 201
COEUR D' ALENE, IDAHO 83814
P 208.664.1773 F 208.667.3174
WWW.MILLERSTAUFFER.COM

FIRE SPRINKLER FLOOR PLAN

BID SET

5/13/2024

D-1 Testing Laboratory
600 W Prairie Ave
Coeur d'Alene, ID 83814

LICENSED ARCHITECT AR-984931 MICHEAL P. WALKER STATE OF IDAHO

No.	Description	Date

PROJECT NUMBER 23239
PRINCIPAL TN
PROJECT MANAGER CD

FS1.0

5/14/2024 9:48:31 AM Autodesk Docs://ITD D-1 Laboratory/23239 ITD D1 Lab MEP_r23.rvt