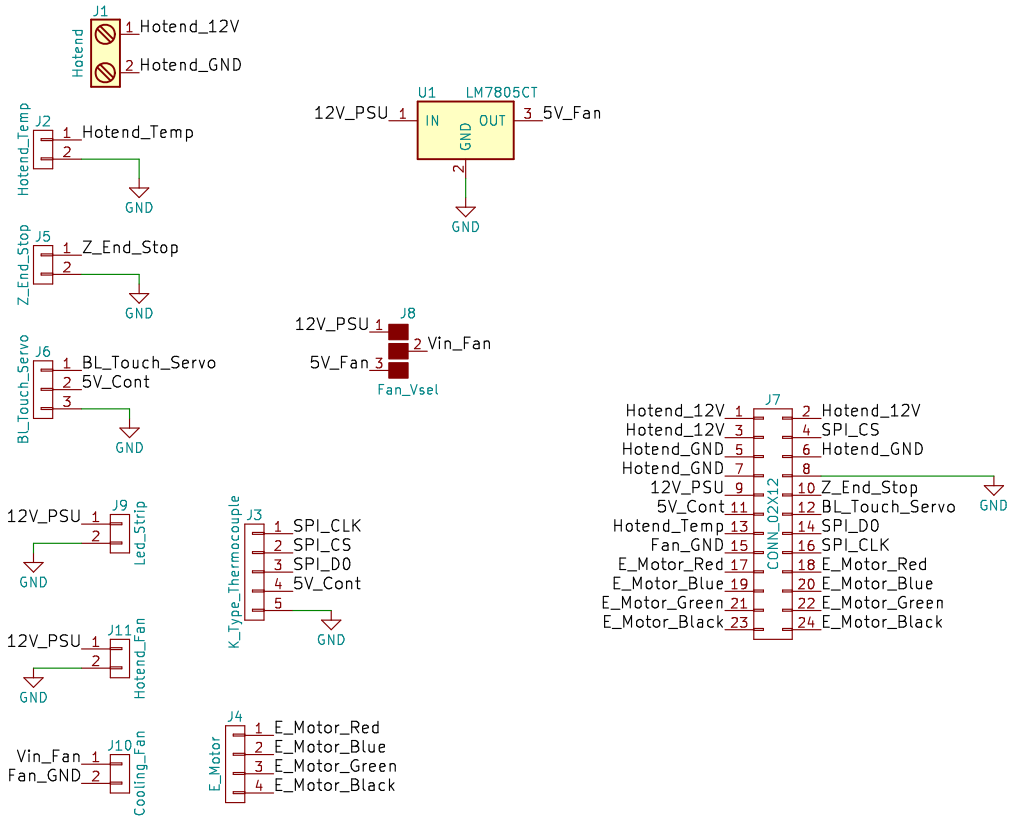

Erik Kallen

Sheet: /

File: mendel90_hotend_pcb.sch

Title: Mendel90 Connector

Size: A4	Date: 2017-07-07	**Rev: 1**
KiCad E.D.A. kicad 4.0.6-e0-634952ubuntu17.04.1		Id: 1/1