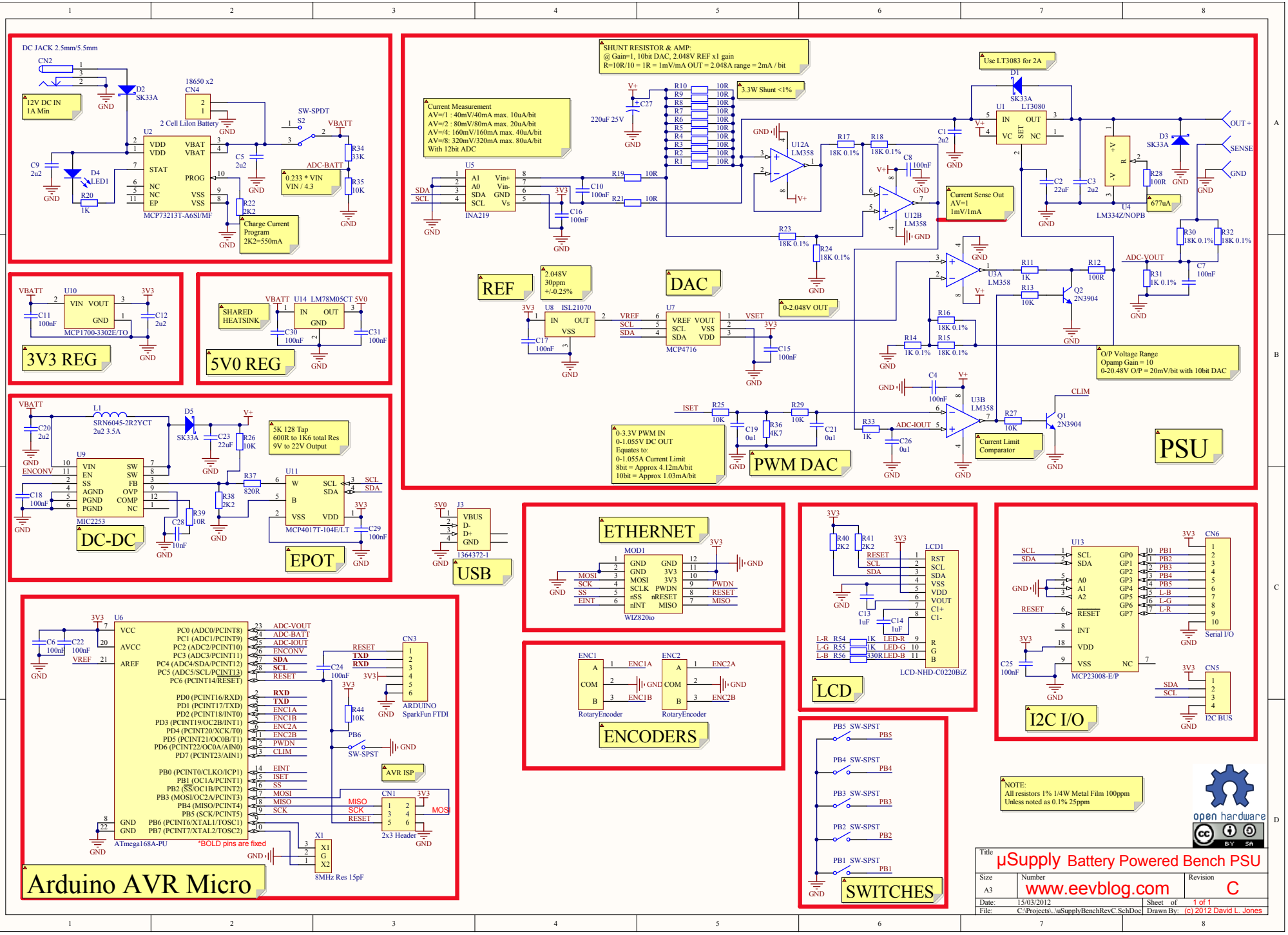
DC JACK 2.5mm/5.5mm
12V DC IN
1A Min
18650 x2
2 Cell Lilon Battery
SW-SPDT
MCP73213T-A6SI/MF
Charge Current
Program
2K2=550mA
0.233 * VIN
VIN / 4.3
3V3 REG
MCP1700-3302E/TO
5V0 REG
SHARED
HEATSINK
LM78M05CT
DC-DC
MIC2253
5K 128 Tap
600R to 1K6 total Res
9V to 22V Output
EPOT
MCP4017T-104E/LT
USB
1364372-1
SHUNT RESISTOR & AMP:
@ Gain=1, 10bit DAC, 2.048V REF x1 gain
R=10R/10 = 1R = 1mV/mA OUT = 2.048A range = 2mA / bit
3.3W Shunt <1%
Current Measurement
AV=/1 : 40mV/40mA max. 10uA/bit
AV=/2 : 80mV/80mA max. 20uA/bit
AV=/4: 160mV/160mA max. 40uA/bit
AV=/8: 320mV/320mA max. 80uA/bit
With 12bit ADC
INA219
Use LT3083 for 2A
LT3080
Current Sense Out
AV=1
1mV/1mA
LM334Z/NOPB
677uA
OUT +
SENSE
GND
REF
2.048V
30ppm
+/-0.25%
DAC
MCP4716
0-2.048V OUT
ISL21070
O/P Voltage Range
Opamp Gain = 10
0-20.48V O/P = 20mV/bit with 10bit DAC
0-3.3V PWM IN
0-1.055V DC OUT
Equates to:
0-1.055A Current Limit
8bit = Approx 4.12mA/bit
10bit = Approx 1.03mA/bit
PWM DAC
Current Limit
Comparator
PSU
ETHERNET
WIZ820io
LCD
LCD-NHD-C0220BiZ
I2C I/O
MCP23008-E/P
Serial I/O
I2C BUS
ENCODERS
RotaryEncoder
SWITCHES
Arduino AVR Micro
ATmega168A-PU
*BOLD pins are fixed
ARDUINO
SparkFun FTDI
AVR ISP
2x3 Header
8MHz Res 15pF
NOTE:
All resistors 1% 1/4W Metal Film 100ppm
Unless noted as 0.1% 25ppm
open hardware
Title
µSupply Battery Powered Bench PSU
Size
A3
Number
www.eevblog.com
Revision
C
Date: 15/03/2012
Sheet of 1 of 1
File: C:\Projects\..\uSupplyBenchRevC.SchDoc
Drawn By: (c) 2012 David L. Jones