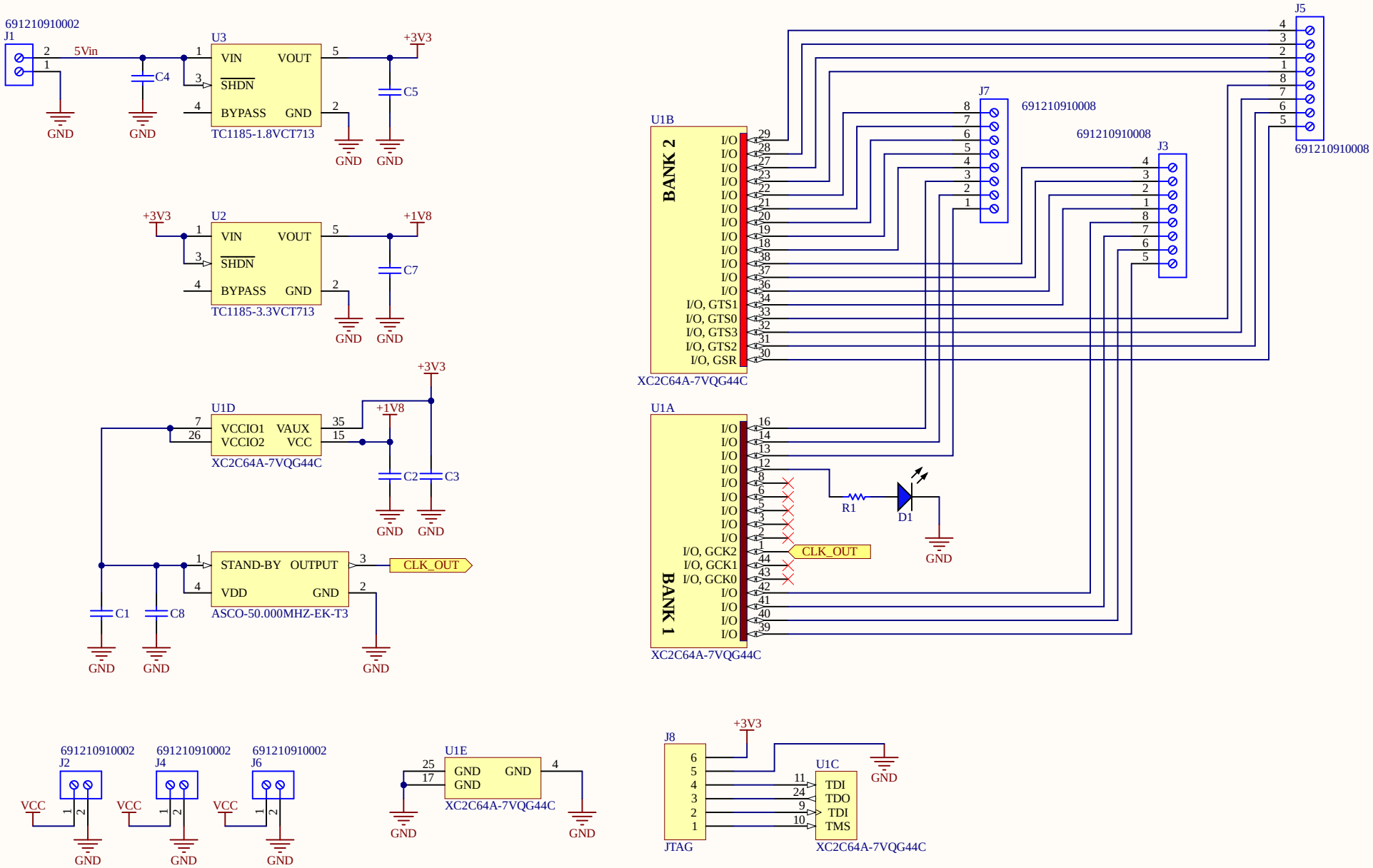
691210910002
J1
5Vin
C4
U3
VIN
VOUT
SHDN
BYPASS
GND
TC1185-1.8VCT713
+3V3
C5
GND
U2
TC1185-3.3VCT713
+1V8
C7
U1D
VCCIO1
VCCIO2
VAUX
VCC
XC2C64A-7VQG44C
C2
C3
STAND-BY
OUTPUT
VDD
ASCO-50.000MHZ-EK-T3
CLK_OUT
C1
C8
J5
J7
691210910008
J3
U1B
BANK 2
I/O, GTS1
I/O, GTS0
I/O, GTS3
I/O, GTS2
I/O, GSR
U1A
BANK 1
I/O, GCK2
I/O, GCK1
I/O, GCK0
R1
D1
J2
J4
J6
VCC
U1E
GND
J8
JTAG
U1C
TDI
TDO
TMS