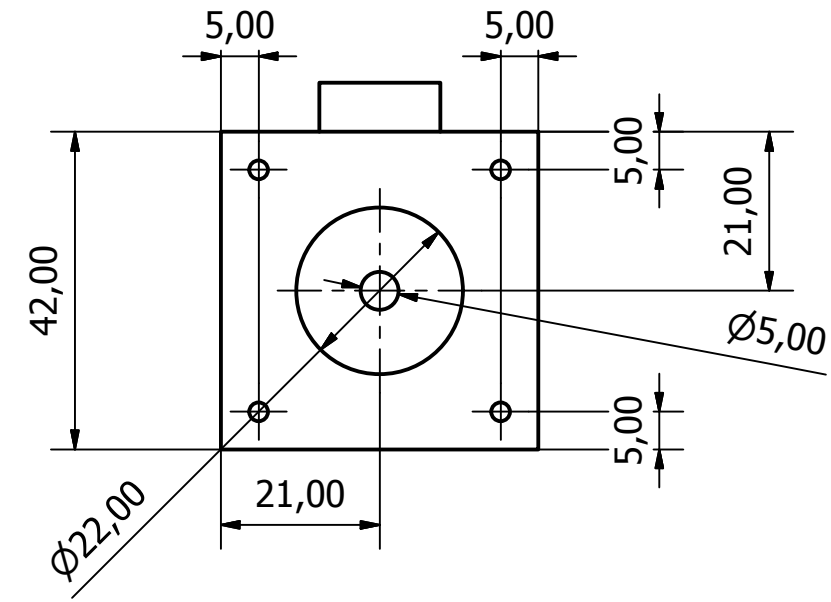

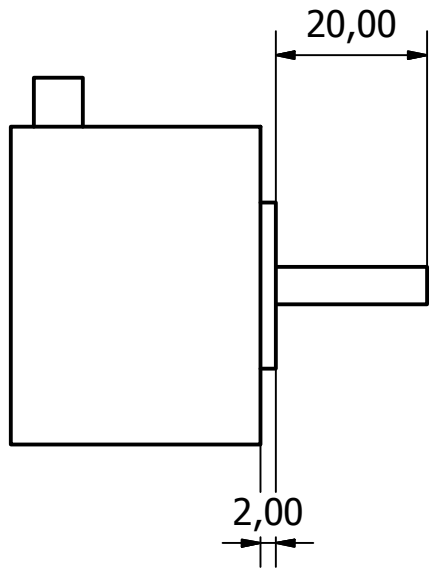

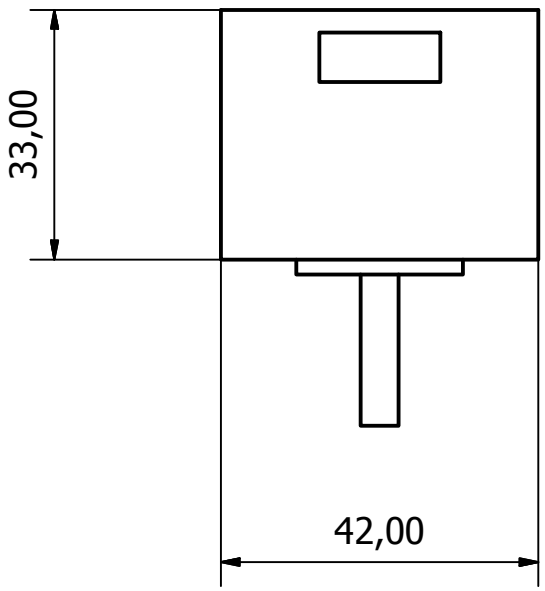

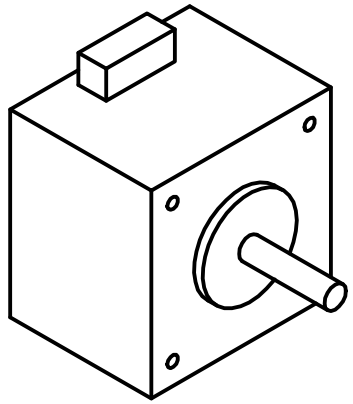

Design by	Checked by	Approved by		Date	Project
Akasip.Lab	LaserTec	EnerMat		01/07/2019	SILAR

Motor			
	Nema 17	Type PE	Sheet 09 / 31