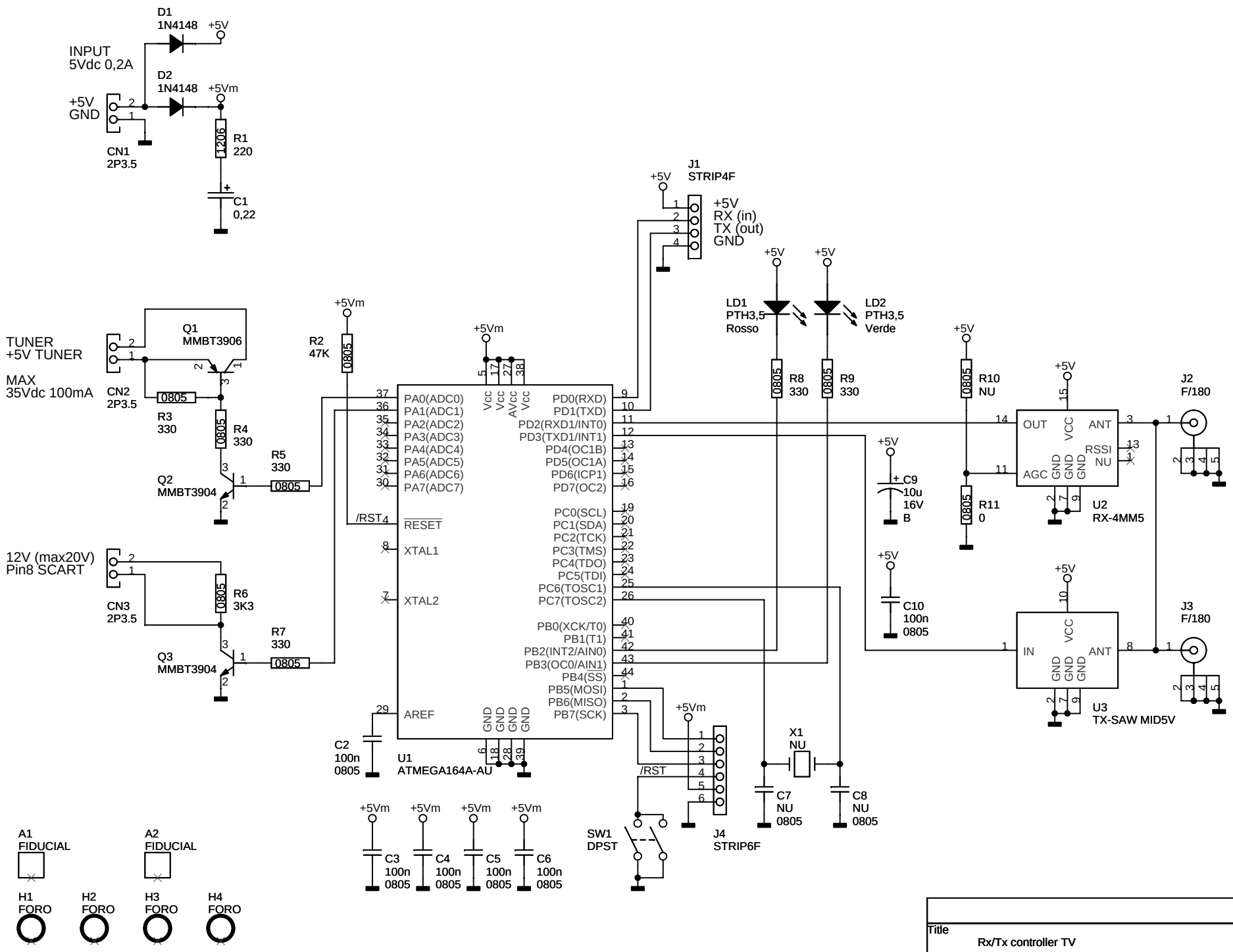

Title	Rx/Tx controller TV	
Size A4	Document Number HOSPITV-01.DSN	Rev 00
Date: Monday, March 21, 2011	Sheet 1 of 1	