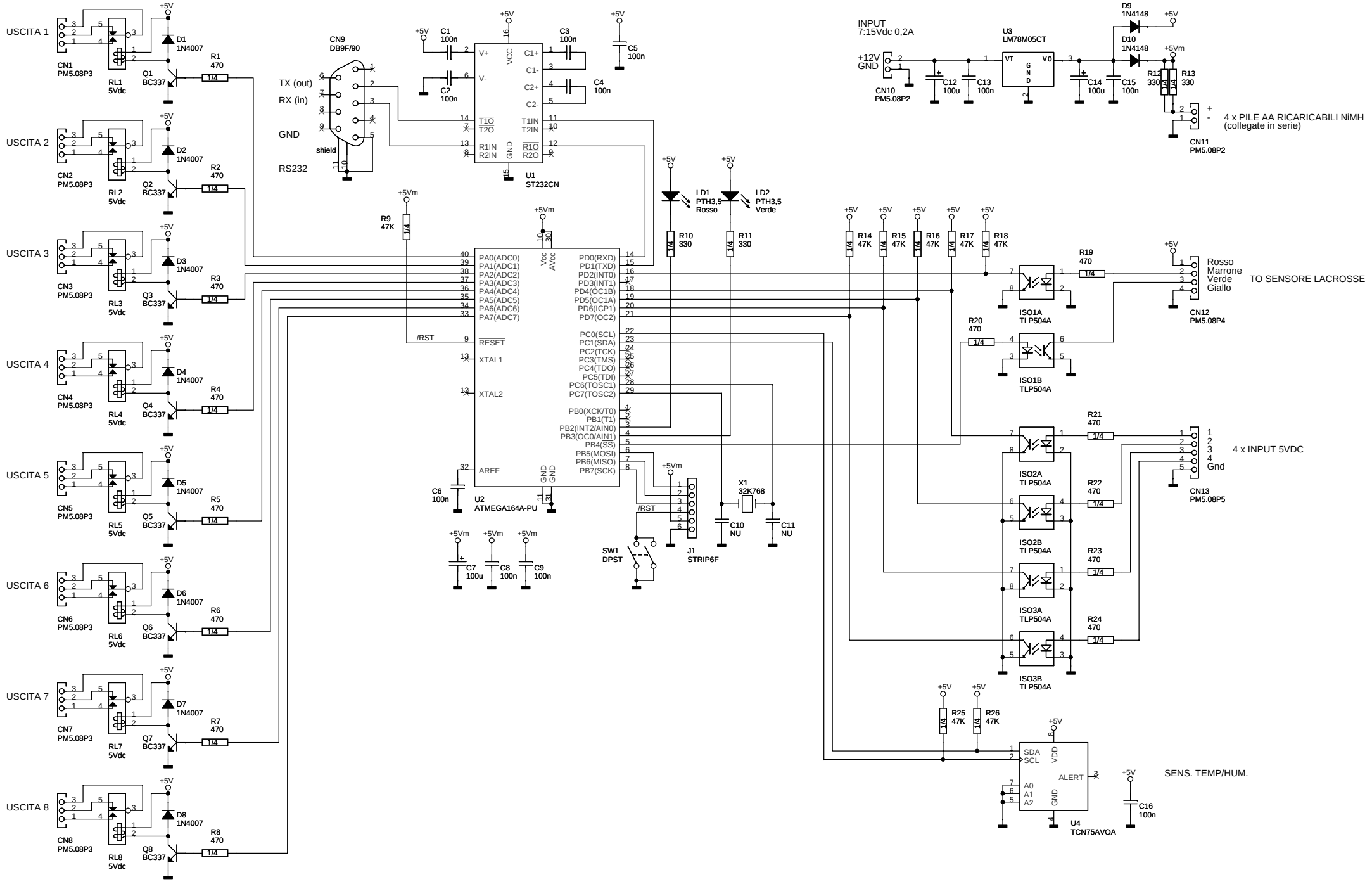

TECNOBRAIN		
Title: ATMEGA164: 4 IN, 8 OUT		
Size: A3	Document Number: TCNB01.DSN	Rev: 00
Date: Tuesday, February 08, 2011	Sheet 1 of 1	