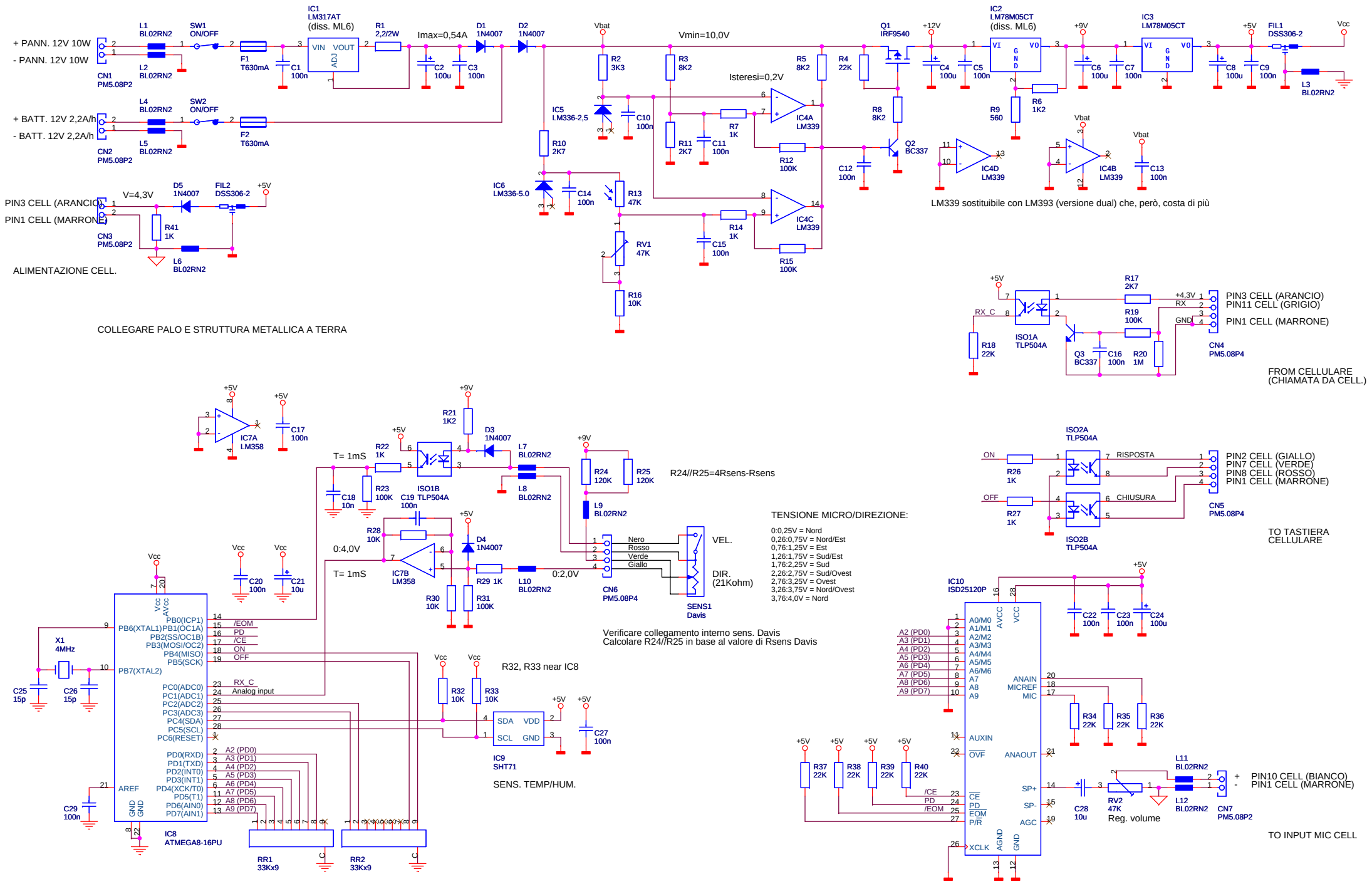

VOLA BASS		
Title: Sint wind (atmel)		
Size: A3	Document Number: SW2.DSN	Rev: 00
Date: Wednesday, February 27, 2008	Sheet 1 of 1	