See3CAM_24CUG

Application Note: Trigger Mode

e-con Systems

Think Camera. Think e-con.

Version 1.5

e-con Systems

3/15/2024

Disclaimer

e-con Systems reserves the right to edit/modify this document without any prior intimation of whatsoever.

© Copyright e-con Systems. 2024. All rights reserved.

Contents

INTRODUCTION TO SEE3CAM_24CUG 3

DESCRIPTION 3
TRIGGER MODE 4

PIN DESCRIPTION 6

TIMING DIAGRAM 8

TRIGGER CIRCUIT 9

STROBE CIRCUIT 10

WHAT'S NEXT? 11

GLOSSARY 12

SUPPORT 13

Introduction to See3CAM_24CUG

See3CAM_24CUG is a 2.3 MP, color, global shutter, UVC compliant, USB 3.2 Gen 1 SuperSpeed camera from e-con Systems, which has over two decades of experience in designing, developing, and manufacturing OEM cameras. It is the latest member of the See3CAM family of USB 3.2 Gen 1 SuperSpeed camera products.

See3CAM_24CUG is a 2.3 MP color camera with the S-mount (also known as M12 board lens) lens holder. The S-mount is one of the most commonly used small form-factor lens mounts for board cameras. See3CAM_24CUG is a single board solution containing the 1/2.6" AR0234 CMOS image sensor from onsemi™ with USB 3.2 Gen 1 interface. It is also backward compatible with the USB 2.0 high speed interface, albeit at lower frame rates.

See3CAM_24CUG does not require any drivers to be installed on the PC. The native UVC drivers of Windows and Linux Operating Systems (OS) will be compatible with this camera. e-con Systems also provides the sample application that demonstrates some of the features of this camera. However, this camera can utilize any DirectShow application such as Skype and so on.

This document describes the information for implementing trigger mode using See3CAM_24CUG device.

Description

This Application Note concentrates on the working of trigger mode in See3CAM_24CUG. Many imaging applications commonly requires the image sensor to capture an image after the triggering action. This triggering action can be the passing of an object on a conveyor belt, the flash of a strobe light, or the click of a button.

See3CAM_24CUG offers the ability to synchronize the start of the image sensor's exposure with this triggering action. This synchronization is controlled on the image sensor using one trigger signal. Additionally, the camera offers the flexibility to program the exposure time.

See3CAM_24CUG is available in two variants, which are, with enclosure (See3CAM_24CUG_CHL_TC_BX) and without enclosure (See3CAM_24CUG_CHL_TC).

The side view of See3CAM_24CUG with enclosure (See3CAM_24CUG_CHL_TC_BX) and without enclosure (See3CAM_24CUG_CHL_TC) is shown in below figures.

© Copyright e-con Systems. 2024. All rights reserved.

Figure 1: Side View of See3CAM_24CUG without Enclosure

Figure 2: Side View of See3CAM_24CUG with Enclosure

Note: This document is not suitable for See3CAM_24CUG with enclosure.

Trigger Mode

In trigger mode, See3CAM_24CUG camera can synchronize the exposure (or integration) of the camera pixels to an external trigger pulse that can be given through the GPIO connector of the camera. Since this is a global shutter camera, all the pixels start and stop integrating at the same time, avoiding rolling skew during the capture of fast-moving scenes.

In trigger mode of See3CAM_24CUG, the preview will not be available, and the camera will be kept in standby waiting for a trigger pulse to start the integration of pixels and provide a global shutter image.

You can configure the camera settings such as white balance, exposure, still image resolution, still image storage location and so on, in manual mode and then enter the trigger mode. The auto function lock option can be used to lock the auto functions such as exposure, white balance and so on, in auto mode. In trigger mode, the camera settings will be retained, but preview will not be available. The camera

will be waiting for an external event on the GPIO connector and the camera will start exposing on the trigger signal. The external trigger pulse on the GPIO connector must be of certain duration for the camera to recognize this event. The requirements for this external trigger signal are given in the later sections of this document.

All the images captured will be stored in the default location, that is, the desktop or can be stored in any user specified path, in the format selected in the Still Capture Settings.

© Copyright e-con Systems. 2024. All rights reserved.

Pin Description

This section describes about the pin description of See3CAM_24CUG.

In trigger mode, the TRIG pin of the GPIO header in the camera is used for input trigger pulse. The below table lists the pin configuration of GPIO header.

Table 1: Pin Configuration of IO Connector

CN6 Pin No	Signal Name	Pin Type	Description	Remarks
1	VCC_5V[1]	Power	Supply voltage for external Flash circuit which is supplied by See3CAM_24CUG	It can source up to 400mA in USB 3.2 Gen 1 and 100mA in USB 2.0. Any surge current drawn from this voltage source will affect the camera.
2	I2C_SDA	Input or Output (PU)	Serial Data of I2C Signal with 1.8V IO. Internally pullup to 1.5kΩ	
3	I2C_SCL	Output (PU)	Serial Clock of I2C signal with 1.8V IO. Internally pullup to 1.5kΩ	Operating frequency is 400 KHz
4	TRIG[(2)(3)]	Input	Active high external trigger input signal for camera module with internal 150 kΩ pull down resistor	Connect to ground through push button switch with necessary de-bouncing circuitry.
5	STROBE	Output	Strobe output signal from camera sensor	Open drain output pin. External pull-up resistor (~4.7kOhm) required.
6	GND	Power	Ground	

PU - Internally Pulled-up

PD - Internally Pulled-down

[1]**Note on VCC_5V Pin:** 5V can be derived from this pin. This pin is provided directly from the USB VBUS and there is no other internal current control circuit provided. Only when interfaced to USB 3.2 Gen 1 port, this can source maximum current of 400mA and 100mA in USB 2.0 port. Consuming beyond the maximum current will lead to drop in voltage and affect the performance of sensor. Thus, the performances are not guaranteed.

[2]**Note on TRIG Pin:** In master mode, the TRIG pin implements a hardware snapshot trigger function. This trigger function is performed with a still pin that is exposed as DirectShow filter object in Windows OS. The DirectShow application must be developed to access this still pin of the camera to capture still image.

[3]**Note on TRIG Pin:** If trigger mode is enabled, the trigger pulses must be provided to this pin in order to get the streaming. For more information on sensor trigger please refer to the *e-CAMView_Streaming_Application_User_Manual_See3CAM_24CUG_<REV>.pdf*.

Pin 4 of CN6 is used to control the start of exposure. The below table lists the voltage levels of high and low logic of pins.

Table 2: Pin Voltage Levels

Symbol	Parameter	Min	Typical	Max	Unit
Digital Input Signals					
V_{IL}	Input voltage LOW	0	-	0.63	V
V_{IH}	Input voltage HIGH	1.17	-	5	V

© Copyright e-con Systems. 2024. All rights reserved.

Timing Diagram

This section describes the timing diagram of See3CAM_24CUG.

The start of exposure is controlled by the sensor trigger input on the image sensor. Normally, the senor trigger is held in a LOW state. To start exposing, this signal is changed to a HIGH state. This HIGH state is then sampled on the rising edge of the master clock (SYSCLK) of the image sensor. The ON time of trigger pulse can be as low as **10us**. The timing diagram of See3CAM_24CUG in trigger mode is shown below.

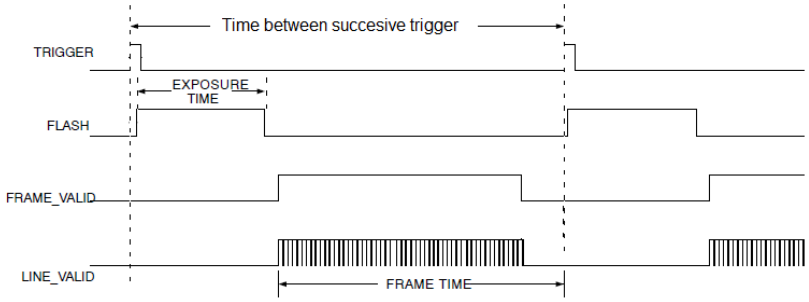

Figure 3: Timing Diagram of See3CAM_24CUG in Trigger Mode

There are some restrictions in the trigger input to trigger the image in See3CAM_24CUG. To know the minimum trigger period and its corresponding exposure settings and to achieve the maximum frame rate for the current resolution, refer the *See3CAM_24CUG_Trigger_Input_Restrictions.xls* excel sheet available in the package.

Note:

- If the trigger pulse width is lesser than the required trigger pulse width, either the exposure may not start, or the captured image will be dark.
- If the trigger pulse is high for longer time, multiple images will be captured.

Trigger Circuit

This section describes the trigger circuit of See3CAM_24CUG.

The following figure shows a reference set up of the trigger circuit. The below design generates the one-shot trigger output with 1ms as trigger pulse width. To change the trigger pulse width, you can tune the R2 and C6 to get the appropriate output.

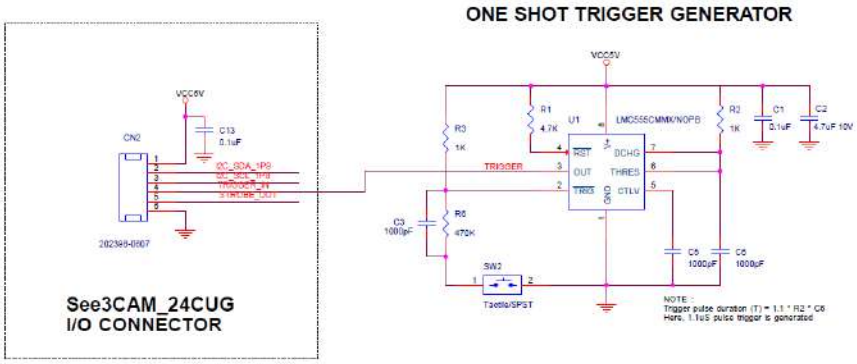

Figure 4: Trigger Circuit of See3CAM_24CUG

© Copyright e-con Systems. 2024. All rights reserved.

Strobe Circuit

This section shows the strobe circuit of See3CAM_24CUG.

The following diagram shows a reference set up of the strobe circuit.

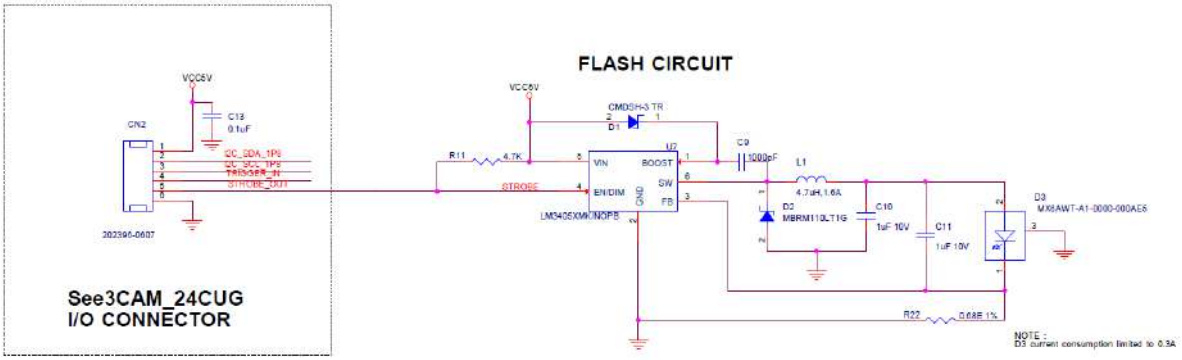

Figure 5: Strobe Circuit of See3CAM_24CUG

What's Next?

After understanding the trigger mode application, you can refer to the *e-CAMView Streaming Application User Manual See3CAM_24CUG* to know more about See3CAM_24CUG features.

© Copyright e-con Systems. 2024. All rights reserved.

Glossary

CMOS: Complementary Metal Oxide Semiconductor.

USB: Universal Serial Bus.

USB 2.0: Universal Serial Bus High Speed.

USB 3.2 Gen 1: Universal Serial Bus Super Speed.

UVC: USB Video Class.

Support

Contact Us

If you need any support on See3CAM_24CUG product, please contact us using the Live Chat option available on our website - https://www.e-consystems.com/

Creating a Ticket

If you need to create a ticket for any type of issue, please visit the ticketing page on our website - https://www.e-consystems.com/create-ticket.asp

RMA

To know about our Return Material Authorization (RMA) policy, please visit the RMA Policy page on our website - https://www.e-consystems.com/RMA-Policy.asp

General Product Warranty Terms

To know about our General Product Warranty Terms, please visit the General Warranty Terms page on our website - https://www.e-consystems.com/warranty.asp

© Copyright e-con Systems. 2024. All rights reserved.

Revision History

Rev	Date	Description	Author
1.0	02-Feb-2021	Initial Draft	Camera Team
1.1	27-Feb-2021	Added Changes	Camera Team
1.2	01-Sept-2021	Added Box Camera Variant Details	Camera Team
1.3	24-June-2022	USB Speed updated	Camera Team
1.4	20-Oct-2023	Added Changes	Camera Team
1.5	15-Mar-2024	Added Changes	Camera Team