e-con Systems India Pvt Ltd

Web: www.e-consystems.com

Email: camerasolutions@e-consystems.com

See3CAM_24CUG

Datasheet

Revision 1.6
20 November 2024

Contents

Contents 2
1 Revision History 3
2 Introduction 4
3 Disclaimer 4
4 Description 4
4.1 Features 6
5 Key Specification 6
5.1 Supported Resolution and Crop in FOV 7
5.2 CMOS Image Sensor Specification 7
6 Pin Description 8
6.1 General Purpose Pin Description 8
6.2 USB Type-C Connector Pin Description 9
7 Connector Part Numbers 10
8 Electrical Specification 10
8.1 Recommended Operating Condition 11
8.1.1 UYVY with USB 3.2 Gen 1 11
8.1.2 MJPEG with USB 3.2 Gen 1 11
8.1.3 UYVY with USB 2.0 12
8.1.4 MJPEG with USB 2.0 12
8.2 DC Characteristics 12
8.2.1 Absolute Maximum for GPIO Pins 12
8.2.2 Voltage Levels for I2C 12
8.2.3 Voltage Levels for Trigger 13
8.2.4 Voltage Levels for Strobe 13
8.3 Operating Temperature Range 13
9 Mechanical Specifications 13
9.1 See3CAM_24CUG_CH_TC Dimension 13
9.2 See3CAM_24CUG_CHL_TC_BX Dimension 14
9.3 Orientation of See3CAM_24CUG 15
9.4 Lens Holder Dimension 15
Support 17

1 Revision History

Rev	Date	Description	Author
1.0	29-Jan-2021	Initial draft	Camera Team
1.1	27-Feb-2021	Added Changes	Camera Team
1.2	08-Mar-2021	Lens holder diagram updated	Camera Team
1.3	30-Aug-2021	Enclosure variant added	Camera Team
1.4	24-June-2022	USB Speed updated	Camera Team
1.5	06-Nov-2023	Added Changes	Camera Team
1.6	20-Nov-2024	Updated Supported OS's	Camera Team

2 Introduction

See3CAM_24CUG is a 2.3 MP global shutter color camera, UVC compliant, USB 3.2 Gen 1 SuperSpeed camera from e-con Systems, a company with over two decades of experience in designing, developing, and manufacturing OEM cameras. It is the latest member of the See3CAM family of USB 3.2 Gen 1 SuperSpeed camera products.

See3CAM_24CUG is a 2.3 MP color camera with the S-mount (also known as M12 board lens) lens holder. The S-mount is one of the most commonly used small form factor lens mounts for board cameras. See3CAM_24CUG is a single-board solution containing the camera sensor module board with 1/2.6" AR0234CS CMOS digital image sensor, global shutter from ON Semiconductor® and the USB 3.2 Gen 1 interface board. It is also backward compatible with the USB 2.0 high speed interface, albeit at lower frame rates.

See3CAM_24CUG is a UVC compliant USB 3.2 Gen 1 SuperSpeed camera that is also backward compatible with USB 2.0 host ports and it does not require any special camera drivers to be installed on the PC. The native UVC drivers of Windows and Linux Operating Systems (OS) will be compatible with this camera. e-con Systems also provides the sample application that demonstrates some of the features of this camera.

See3CAM_24CUG is available in three variants:

i) Without Enclosure: See3CAM_24CUG_CHL_TC (with lens) and See3CAM_24CUG_CH_TC (without lens)

ii) With Enclosure: See3CAM_24CUG_CHL_TC_BX

This document describes the features of See3CAM_24CUG camera board and the pin-outs of the connectors including with mechanical diagram.

3 Disclaimer

The specifications and features of See3CAM_24CUG camera board are provided here as reference only and e-con Systems reserves the right to edit/modify this document without any prior intimation of whatsoever.

4 Description

See3CAM_24CUG camera has AR0234CS CMOS digital image sensor with Global Shutter from ON Semiconductor® and USB interface controller with USB Type-C connector. This See3CAM_24CUG is a ready-to-manufacture camera board with all the necessary firmware built-in and is compatible with the UVC version 1.0 standard. You can integrate this camera into the products, and this helps to cut short the time-to-market. This camera board is UVC compatible and will work with the standard drivers available with Windows and Linux OS. There is no need for any additional driver installation.

See3CAM_24CUG is a UVC compliant camera and it does not require any drivers to be installed on the PC. So, video streaming through UVC is possible without any special drivers on OSes that have built-in support for UVC standards. The camera is exposed as DirectShow capture source to the Windows PC and e-con Systems provides sample DirectShow application that demonstrates the features of this camera.

In Linux, the built-in UVC driver works very well with this camera and there is no need for any additional driver installation. This camera is exposed as a Video4Linux2 (V4L2) camera and e-con Systems also provides a sample application for Linux OS. You can also develop customized applications for the See3CAM_24CUG camera using standard V4L2 APIs.

See3CAM_24CUG_CHL_TC and See3CAM_24CUG_CH_TC camera board has a 6-pin GPIO header that contains signals which can be used for customization requirements. It has serial I2C signals (Clock and Data), Strobe and Trigger. This functionality is embedded in the firmware which runs on the See3CAM_24CUG camera controller and on the sample PC application. For See3CAM_24CUG_CHL_TC_BX GPIO header is not accessible.

The front and rear views of See3CAM_24CUG device without casing (See3CAM_24CUG_CHL_TC) are shown in below figure.

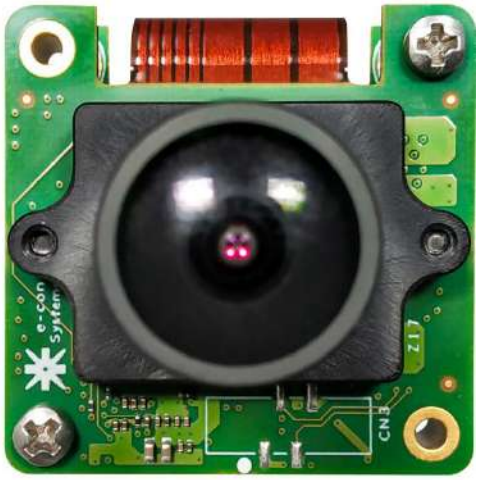

Figure 1: Front View of See3CAM_24CUG_CHL_TC

Figure 2: Rear View of See3CAM_24CUG_CHL_TC

4.1 Features

The features of See3CAM_24CUG are as follows:

- 2 MP Global shutter color camera sensors
- UYVY and MJPEG output format
- Standard M12 lens holder for use with customized optics or lenses for various applications
- USB 3.2 Gen 1 device with Type-C reversible interface connector
- Light weight, versatile, and portable design
- 6-pin GPIO header for standard and custom operations. GPIO pins are accessible from the PC host application.
- Plug-and-Play setup (UVC compliant) for Windows 10 or 11 and Linux Ubuntu 18.04 (64-bit), 20.04 (64-bit), or 22.04 (64-bit).
- Imaging applications
  - Preview format UYVY - HD (1280 x 720), FHD (1920 x 1080), 2MP (1920 x 1200).
  - Preview format MJPEG - HD (1280 x 720), FHD (1920 x 1080), 2MP (1920 x 1200).
  - Still capture support - All preview resolutions
  - Field of View (FOV) – 128.2 deg diagonal for the maximum resolution
- Exposure control – Auto exposure and Manual exposure controls are available.
- Operating voltage - 5V +/−5%, Current - 404 mA
- Restriction of Hazardous Substances (RoHS) compliant

5 Key Specification

The below table lists the specifications of See3CAM_24CUG.

Description	Specification
Size (L x W x H)	**See3CAM_24CUG_CH_TC:** 30 mm x 30 mm x 26 mm (without lens)
	See3CAM_24CUG_CH_TC_BX: 35.30 mm x 35.30 mm x 29 mm (without lens)
Video Format	UYVY and MJPEG
USB	USB 3.2 Gen 1 and USB 2.0
Image Resolution	HD (1280 x 720)
	FHD (1920 x 1080)
	2MP (1920 x 1200)
Supported OS	Windows 10 or 11
	Ubuntu 18.04 (64-bit), 20.04 (64-bit) or 22.04 (64-bit)
UVC Compliant	Yes, compliant with UVC version 1.0
Product ID (PID)	0xC128
Vendor ID (VID)	0x2560

Table 1: Key Specifications of See3CAM_24CUG

The FOV of See3CAM_24CUG is shown below.

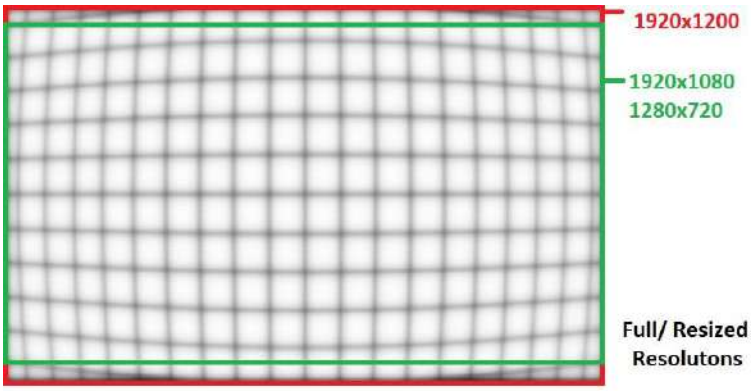

Figure 3: FOV of See3CAM_24CUG

5.1 Supported Resolution and Crop in FOV

The below table lists the supported resolutions and crop in FOV.

Format	Resolution	Frame Rate (fps)		Crop in FOV	
		USB 3.2 Gen 1	USB 2.0	Horizontal	Vertical
UYVY	2.3MP (1920 X 1200)	55	6	0%	0%
	FHD (1920 X 1080)	60	8	0%	10%
	HD (1280 X 720)	120 and 60	15	0%	10%
MJPEG	2.3MP (1920 X 1200)	114 and 60	114 and 60	0%	0%
	FHD (1920 X 1080)	120, 60 and 30	120, 60 and 30	0%	10%
	HD (1280 X 720)	120 and 60	120 and 60	0%	10%

Table 2: Supported Resolution and Crop in FOV

5.2 CMOS Image Sensor Specification

The below table lists the specifications of CMOS image sensor used in this See3CAM_24CUG camera board.

Sensor Specification	
Type/Optical Size	1/2.6" Optical format CMOS image sensor
Resolution	2 MP
Sensor Type	Color – UYVY and MJPEG – CMOS Global Shutter sensor
Pixel Size	3 µm x 3 µm
Sensor Active Pixels	1920H x 1200V

Table 3: CMOS Image Sensor Specification

The AR0234CS sensor is a 2.3 MP Global shutter color CMOS image sensor. For more information about the AR0234CS sensor or for *Datasheet*, please contact ON Semiconductor®.

6 Pin Description

See3CAM_24CUG has two connectors such as USB Type-C connector and one GPIO header.

6.1 General Purpose Pin Description

The general-purpose pins are used for specific camera image processing and LED control. The below table describes the part number, product image and its accessible components.

Part Number	See3CAM_24CUG_CHL_TC	See3CAM_24CUG_CHL_TC_BX
Product Image		
Accessible Features	• GPIO header is accessible. • LED indication is visible	• GPIO header is not accessible. • LED indication is not visible

Table 4: Product Description

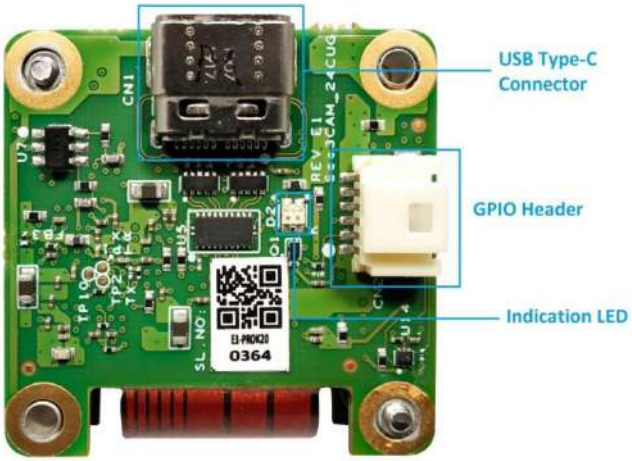

Figure 4: GPIO Header of See3CAM_24CUG_CH_TC

The below table lists the pin types and description of GPIO header.

CN6 Pin no	Signal Name	Pin Type	Description	Remarks
1	VCC_5V[1]	Power	Supply voltage for external Flash circuit which is supplied by See3CAM_24CUG	It can source up to 400mA in USB 3.2 Gen 1 and 100mA in USB 2.0. Any surge current drawn from this voltage source will affect the camera.
2	I2C_SDA	Input or Output (PU)	Serial Data of I2C Signal with 1.8V IO. Internally pullup to 1.5kΩ	
3	I2C_SCL	Output (PU)	Serial Clock of I2C signal with 1.8V IO. Internally pullup to 1.5kΩ	Operating frequency is 400 KHz
4	TRIG[(2)(3)]	Input	Active high external trigger input signal for camera module with internal 150 kΩ pull down resistor	Connect to ground through push button switch with necessary de-bouncing circuitry.
5	STROBE	Output	Strobe output signal from camera sensor	Open drain output pin. External pull-up resistor (~4.7kOhm) required.
6	GND	Power	Ground	

Table 5: Pin Types and its Description

PU - Internally Pulled-up
PD - Internally Pulled-down

[1]**Note on VCC_5V Pin**: 5V can be derived from this pin. This pin is provided directly from the USB VBUS and there is no other internal current control circuit provided. Only when interfaced to USB 3.2 Gen 1 port, this can source maximum current of 400 mA and 100mA in USB 2.0 port. Consuming beyond the maximum current will lead to drop in voltage and affect the performance of sensor. Thus, the performances are not guaranteed.

[2]**Note on TRIG Pin**: In master mode, the TRIG pin implements a hardware snapshot trigger function. This trigger function is performed with a still pin that is exposed as DirectShow filter object in Windows OS. The DirectShow application must be developed to access this still pin of the camera to capture still image.

[3]**Note on TRIG Pin**: If trigger mode is enabled, the trigger pulses must be provided to this pin in order to get the streaming. For more information on sensor trigger, please refer to the user manual.

6.2 USB Type-C Connector Pin Description

The below table lists the pin-outs of USB Type-C connector which is used to connect See3CAM_24CUG board with PC through USB Type-A to Type-C cable. This is a standard USB Type-C connector.

Pin No	Signal	Description	Pin No	Signal	Description
A1	GND	Ground return	B12	GND	Ground return
A2	SSTXp1	SuperSpeed differential pair 1, TX,	B11	SSRXp1	SuperSpeed differential pair 2, RX, positive

		positive			
A3	SSTXn1	SuperSpeed differential pair 1, TX, negative	B10	SSRXn1	SuperSpeed differential pair 2, RX, negative
A4	VBUS	Bus power	B9	VBUS	Bus power
A5	CC1	Configuration channel	B8	SBU2	-
A6	Dp1	Hi-Speed differential pair, position 1, positive	B7	Dn2	Hi-Speed differential pair, position 2, negative
A7	Dn1	Hi-Speed differential pair, position 1, negative	B6	Dp2	Hi-Speed differential pair, position 2, positive
A8	SBU1	-	B5	CC2	Configuration channel
A9	VBUS	Bus power	B4	VBUS	Bus power
A10	SSRXn2	SuperSpeed differential pair 4, RX, negative	B3	SSTXn2	SuperSpeed differential pair 3, TX, negative
A11	SSRXp2	SuperSpeed differential pair 4, RX, positive	B2	SSTXp2	SuperSpeed differential pair 3, TX, positive
A12	GND	Ground return	B1	GND	Ground return

Table 6: USB Type-C Connector Pin Description

7 Connector Part Numbers

The USB connector is the standard USB Type-C connector as specified in the USB 3.2 Gen 1 standards. Any USB standard compliant USB 3.2 Gen 1 Type-A to Type-C cable will be compatible with this connector.

The below table lists the connectors used in the See3CAM_24CUG camera board and its compatible mating connectors.

Connector	Description	Manufacturer	Part Number	Compactible Mating Part No's
USB 3.2 Type-C Connector	CONN USB Type-C 3.2 Receptacle 24Pos Right Angle SMT	Molex	2012670005	Any standard USB 3.2 Gen 1 Type C Cable Supported
GPIO Header (CN2 on See3CAM_24CUG Base Board)	Connector Header Surface Mount, Right Angle 6 position 0.039" (1.00mm)	Molex	202396-0607	0151330602

Table 7: Connectors and its Part Number Details

8 Electrical Specification

The electrical specification of See3CAM_24CUG are as follows:

- Recommended Operating Condition
- DC Characteristics
- Operating Temperature Range

The values described in this section are measured in e-con Systems lab and this can be used as reference only. The current measurements are typical values and are subject to change for different camera boards under different conditions. However, these values can be taken as a reference for power estimation and power supply design.

8.1 Recommended Operating Condition

The below table lists the recommended operating condition of See3CAM_24CUG under various operating condition.

Parameter	Typical Operating Voltage	Current (mA)	Typical Power Consumption (W)
Streaming Maximum Power 1920 x 1200 at 114 fps in USB 3.2 Gen 1	5V ± 250 mV	404	2.020
Streaming Minimum Power 1920 x 1200 at 6 fps in USB 2.0		172	0.860
Power at Idle Condition		62	0.310

Table 8: Recommended Operating Condition of See3CAM_24CUG

8.1.1 UYVY with USB 3.2 Gen 1

The below table lists the current consumed by See3CAM_24CUG in UYVY format with USB 3.2 Gen 1 under various operating condition.

S. No	Resolution	Frame Rate (fps)	Supply Voltage (V)	Typical Current (mA)	Power Consumption (W)
1	1280 x 720	120	5	373	1.865
		60	5	269	1.345
2	1920 x 1080	60	5	275	1.375
3	1920 x 1200	55	5	283	1.415

Table 9: UYVY with USB 3.2 Gen 1

8.1.2 MJPEG with USB 3.2 Gen 1

The below table lists the current consumed by See3CAM_24CUG in MJPEG format with USB 3.2 Gen 1 under various operating conditions.

S. No	Resolution	Frame Rate (fps)	Supply Voltage (V)	Typical Current (mA)	Power Consumption (W)
1	1280 x 720	120	5	367	1.835
		60	5	269	1.345
2	1920 x 1080	120	5	396	1.980
		60	5	282	1.410
		30	5	227	1.135
3	1920 x 1200	114	5	404	2.020
		60	5	294	1.470

Table 10: MJPEG with USB 3.2 Gen 1

8.1.3 UYVY with USB 2.0

The below table lists the current consumed by See3CAM_24CUG in UYVY format with USB 2.0 under various operating condition.

S. No	Resolution	Frame Rate (fps)	Supply Voltage (V)	Typical Current (mA)	Power Consumption (W)
1	1280 x 720	15	5	180	0.900
2	1920 x 1080	8	5	173	0.865
3	1920 x 1200	6	5	172	0.860

Table 11: UYVY with USB 2.0

8.1.4 MJPEG with USB 2.0

The below table lists the current consumed by See3CAM_24CUG in MJPEG format with USB 2.0 under various operating conditions.

S. No	Resolution	Frame Rate (fps)	Supply Voltage (V)	Typical Current (mA)	Power Consumption (W)
1	1280 x 720	120	5	351	1.755
		60	5	249	1.245
2	1920 x 1080	120	5	361	1.805
		60	5	259	1.295
		30	5	205	1.025
3	1920 x 1200	114	5	370	1.850
		60	5	261	1.305

Table 12: MJPEG with USB 2.0

8.2 DC Characteristics

The DC Characteristics of See3CAM_24CUG are as follows:

- Absolute Maximum for GPIO Pins
- Voltage Levels for I2C
- Voltage Levels for Trigger
- Voltage Level for Strobe

8.2.1 Absolute Maximum for GPIO Pins

The below table lists the maximum input voltage for GPIO pins.

Parameter	Description	Value	Units
Vinput[1]	DC Input voltage (except trigger)	2.8	V
	DC input for Trigger	6.5	V

Table 13: Absolute Maximum Values for GPIO Pins

[1]Exceeding the maximum value may shorten the life of the device or cause permanent damage to the device.

8.2.2 Voltage Levels for I2C

The below table lists the GPIO voltage levels of See3CAM_24CUG.

Symbol	Parameter	Min	Typical	Max	Unit
Digital Input Signals					
V_{IL}	Input voltage LOW	0	-	0.45	V
V_{IH}	Input voltage HIGH	1.4	-	-	V
Digital Output Signals					
V_{OL}	Output voltage LOW with I_{OL} = +100µA	-	-	0.18	V
V_{OH}	Output voltage HIGH with I_{OL} = −100µA	1.62	-	-	V

Table 14: Voltage Levels for I2C

8.2.3 Voltage Levels for Trigger

The below table lists the GPIO voltage levels of See3CAM_24CUG.

Symbol	Parameter	Min	Typical	Max	Unit
Digital Input Signals					
V_{IL}	Input voltage LOW	0	-	0.63	V
V_{IH}	Input voltage HIGH	1.17	-	5	V

Table 15: Voltage Levels for Trigger

8.2.4 Voltage Levels for Strobe

The below table lists the Strobe output of See3CAM_24CUG. Strobe is a open drain output and it requires external pull-up resistor(~4.7kOhm).

Symbol	Parameter	Test Condition	Min	Typical	Max	Unit
V_{OL}	Output voltage LOW	Vcc= 1.8V to 5V I_{OL} = 100µA	-	-	0.1	V

Table 16: Voltage Levels for Strobe

8.3 Operating Temperature Range

The below table lists the operating temperature range of See3CAM_24CUG.

Parameter Description	Temperature Range (Without casing)	Temperature Range (With casing)
Operating temperature range[1]	−30°C to 70°C	0°C to 50°C

Table 17: Operating Temperature Range

[1]This is the maximum temperature range up to which the camera sensor can be operated. This value is measured at junction.

Note: The default lens supplied with this camera has an operating range of −20°C to 80°C. You can choose wider operating temperature lens as per your requirements.

9 Mechanical Specifications

The board drawing and dimensions are given in the below sections.

9.1 See3CAM_24CUG_CH_TC Dimension

See3CAM_24CUG_CH_TC size is 30 mm x 30 mm x 26 mm (without Lens). The top and bottom views of See3CAM_24CUG_CH_TC module board with mechanical dimensions are shown below.

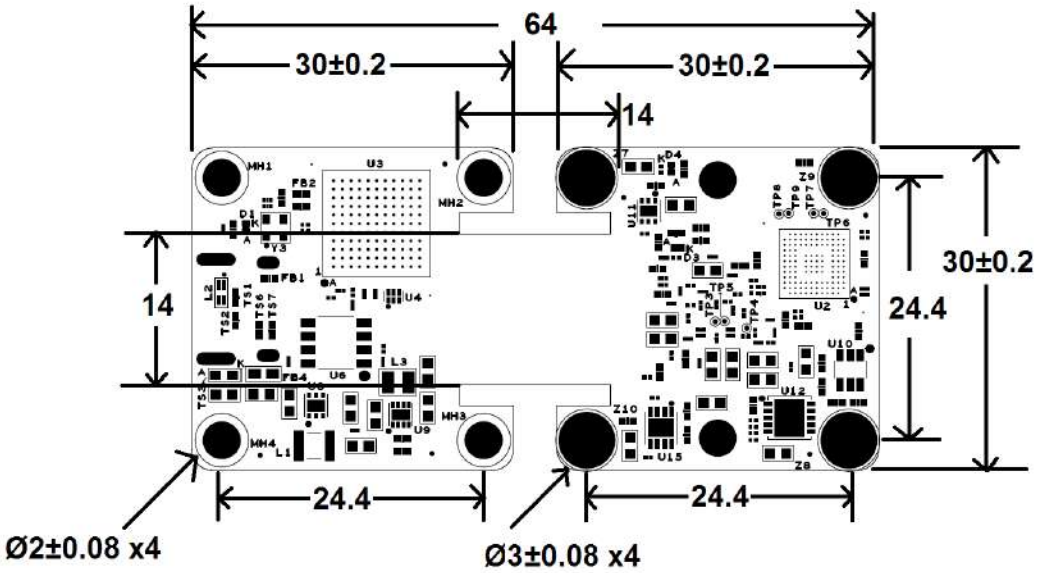

Figure 5: Top View of See3CAM_24CUG_CH_TC Mechanical Dimensions

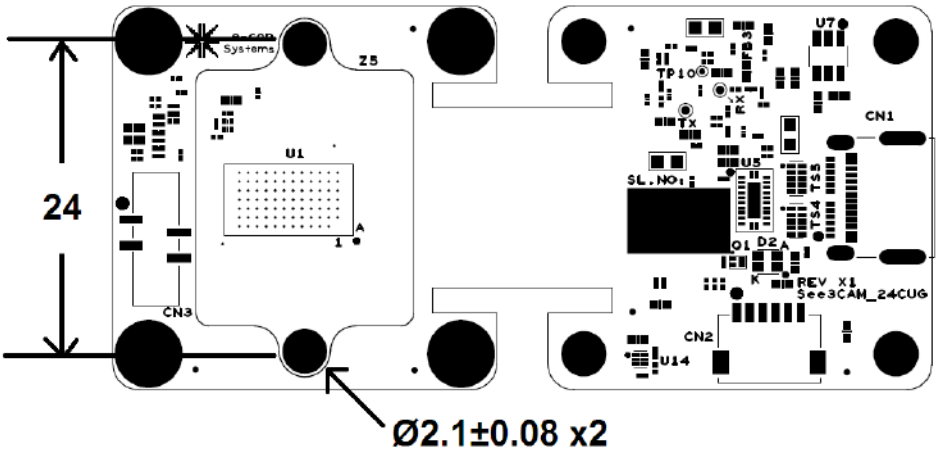

Figure 6: Bottom View of See3CAM_24CUG_CH_TC Mechanical Dimensions

Note: All dimensions are in millimeter (mm). Unfolded camera module dimensions are given above; however you will be given with folded camera module with 30 x 30 x 26 mm outer dimensions

9.2 See3CAM_24CUG_CHL_TC_BX Dimension

See3CAM_24CUG_CHL_TC_BX size is 35.3 mm x 35.3 mm x 29 mm (without Lens). The mechanical dimension of See3CAM_24CUG_CH_TC_BX with enclosure is shown below.

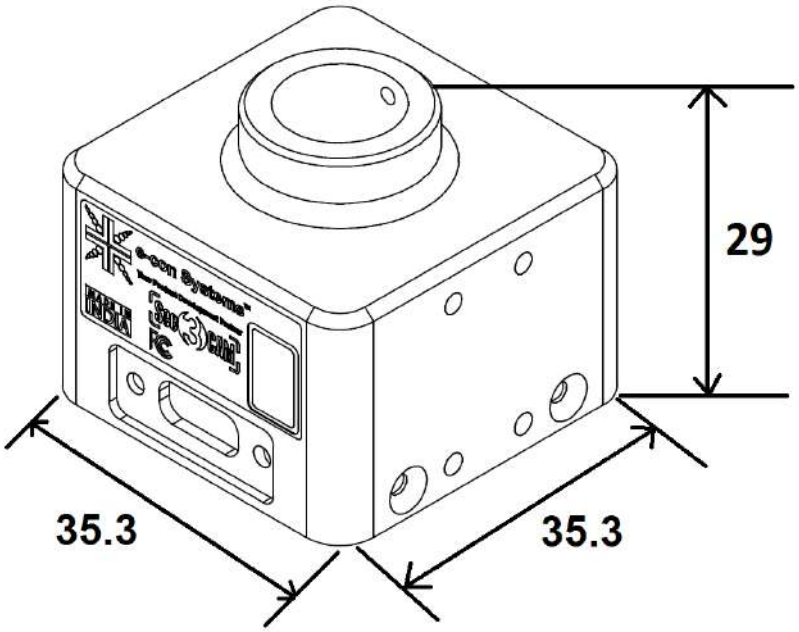

Figure 7: See3CAM_20CUG_CH_TC_BX Dimensions (Without lens)

Note: All dimensions are in millimeter (mm).

9.3 Orientation of See3CAM_24CUG

The image orientation of See3CAM_24CUG with respect to USB cable is shown below.

Figure 7: Camera Image Orientation with respect to USB Cable

9.4 Lens Holder Dimension

The lens holder with mechanical dimensions is shown below.

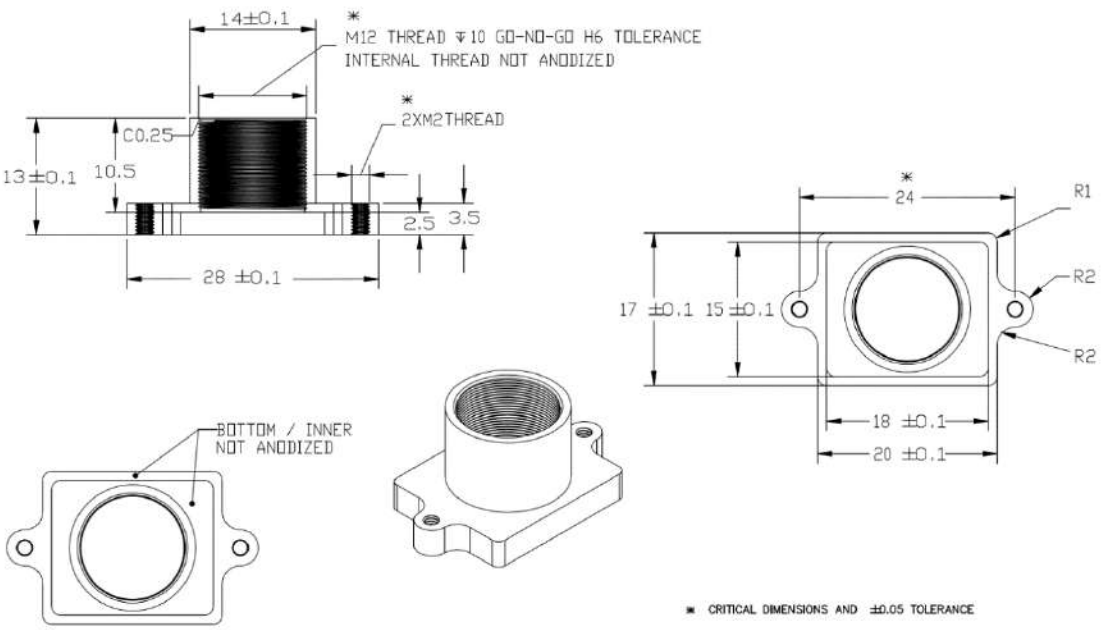

Figure 8: Lens Holder Mechanical Dimensions

Note: All dimensions are in millimeter (mm).

Support

Contact Us

If you need any support on See3CAM_24CUG product, please contact us using the Live Chat option available on our website - https://www.e-consystems.com/

Creating a Ticket

If you need to create a ticket for any type of issue, please visit the ticketing page on our website - https://www.e-consystems.com/create-ticket.asp

RMA

To know about our Return Material Authorization (RMA) policy, please visit the RMA Policy page on our website - https://www.e-consystems.com/RMA-Policy.asp

General Product Warranty Terms

To know about our General Product Warranty Terms, please visit the General Warranty Terms page on our website - https://www.e-consystems.com/warranty.asp