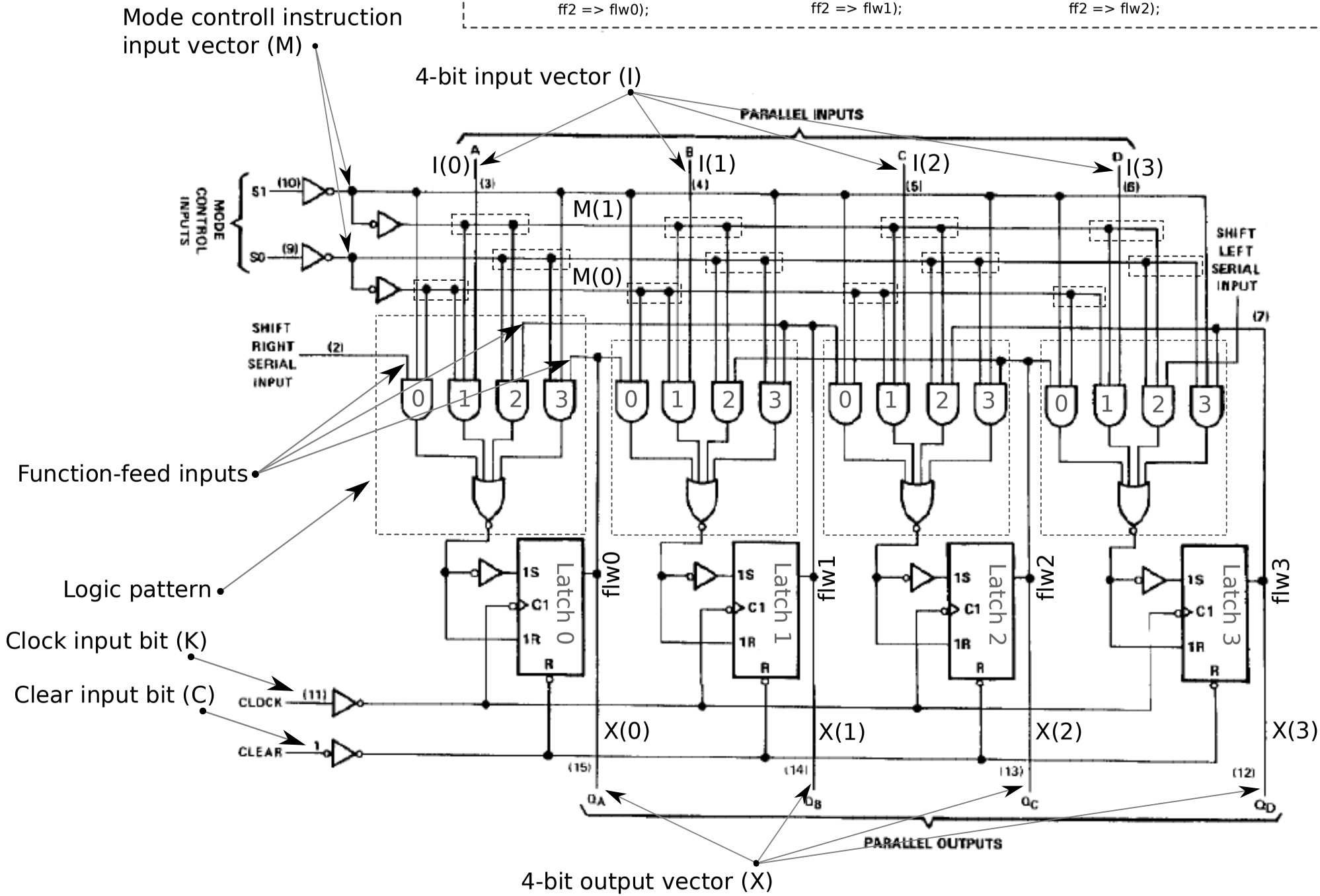```
LogicPatern(output => Latch0,
            ff0 => ShiftRigt,
            ff1 => flw1,
            ff2 => flw0);

LogicPatern(output => Latch1,
            ff0 => flw0,
            ff1 => flw2,
            ff2 => flw1);

LogicPatern(output => Latch2,
            ff0 => flw1
            ff1 => flw3,
            ff2 => flw2);

LogicPatern(output => Latch3,
            ff0 => flw2,
            ff1 => ShiftLeft,
            ff2 => flw3);
```