FSM State Encoding

- Binary encoding: i.e., for four states, 00, 01, 10, 11
- One-hot encoding
  - One state bit per state
  - Only one state bit is HIGH at once
  - I.e., for four states, 0001, 0010, 0100, 1000
  - Requires more flip-flops
  - Often next state and output logic is simpler

Vending machine block diagram

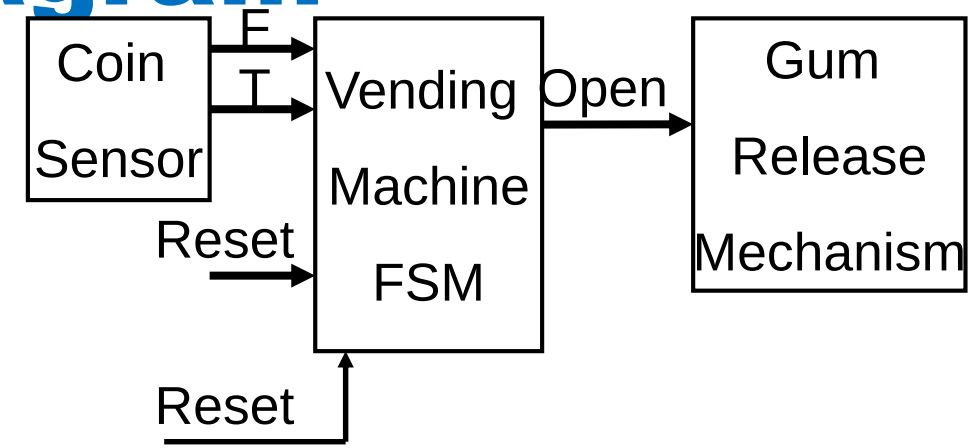

5p=F

10p=T

- Three 5p coins in sequence: F,F,F
- Two 5p coins followed by a 10p: F,F,T
- A 5p coin followed by a 10p: F,T
- A 10p coin followed by a 5p: T,F
- Two 10p coins in sequence: T,T

State diagram

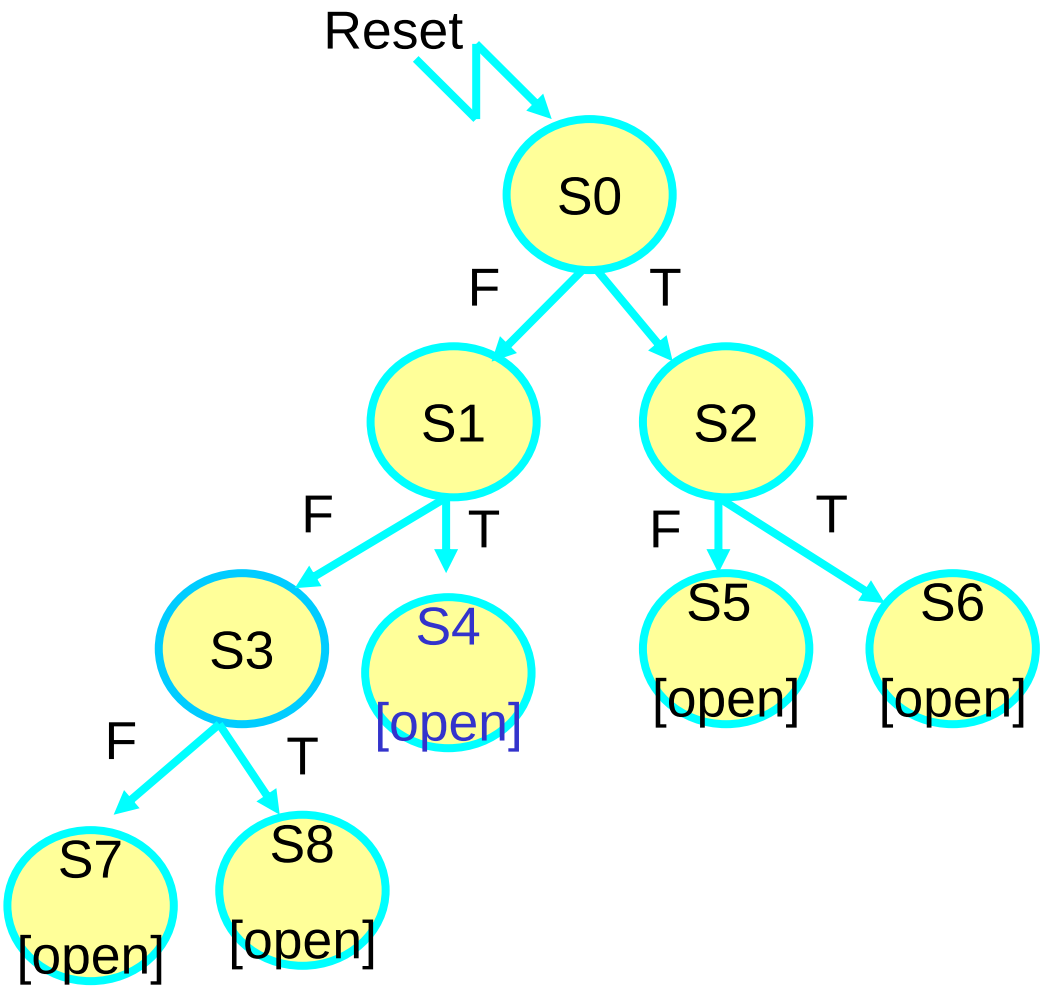

5p=F

10p=T

Minimized state diagram

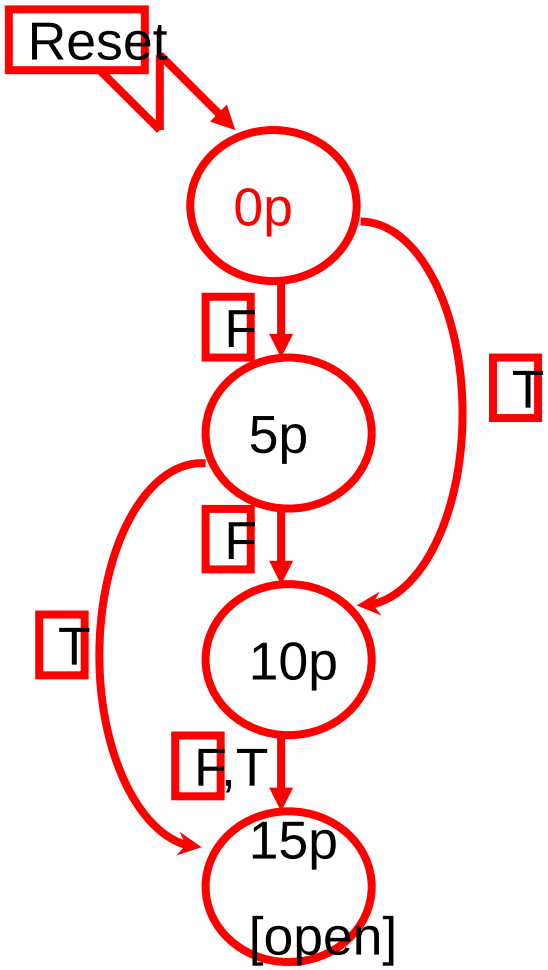

5p=F

10p=T

Minimized transition table

Present state	Inputs		Next state	Output Open
	T	F		
0p	0	0	0p	0
	0	1	5p	0
	1	0	10p	0
	1	1	X	X
5p	0	0	5p	0
	0	1	10p	0
	1	0	15p	0
	1	1	X	X
10p	0	0	10p	0
	0	1	15p	0
	1	0	15p	0
	1	1	X	X
15p	X	X	15p	1

5p=F

10p=T

Encoded transition table

Present state		Inputs		Next state		Output Open
		T	F			
Q_1	Q_0			D_1	D_0	
0	0	0	0	0	0	0
		0	1	0	1	0
		1	0	1	0	0
		1	1	X	X	X
0	1	0	0	0	1	0
		0	1	1	0	0
		1	0	1	1	0
		1	1	X	X	X
1	0	0	0	1	0	0
		0	1	1	1	0
		1	0	1	1	0
		1	1	X	X	X
1	1	0	0	1	1	1
		0	1	1	1	1
		1	0	1	1	1
		1	1	X	X	X

5p=F

10p=T

Vending Machine K Maps for D flip flops implementation

Design Example (Continued)

TF \ Q1Q0	00	01	11	10
00	0	0	1	1
01	0	1	1	1
11	X	X	X	X
10	1	1	1	1

K-map for D_1

TF \ Q1Q0	00	01	11	10
00	0	1	1	1
01	0	1	1	1
11	X	X	X	X
10	0	1	1	1

K-map for D_0

TF \ Q1Q0	00	01	11	10
00	0	0	1	0
01	0	0	1	0
11	X	X	X	X
10	0	0	1	0

K-map for Open

D_1 = ?
D_0 = ?
Open=?

Vending Machine- K Maps for D flip flops implementation

Design Example (Continued)

TF \ Q1Q0	00	01	11	10
00	0	0	1	1
01	0	1	1	1
11	X	X	X	X
10	1	1	1	1

K-map for D_1

TF \ Q1Q0	00	01	11	10
00	0	1	1	0
01	1	0	1	1
11	X	X	X	X
10	0	1	1	1

K-map for D_0

TF \ Q1Q0	00	01	11	10
00	0	0	1	0
01	0	0	1	0
11	X	X	X	X
10	0	0	1	0

K-map for Open

$$D_1 = Q_1 + T + Q_0 . F$$

$$D_0 = F.Q_0' + Q_0.F' + Q_1 .F + Q_1 .T$$

$$\text{Open} = Q_1 Q_0$$

Vending Machine- D flip flops implementation

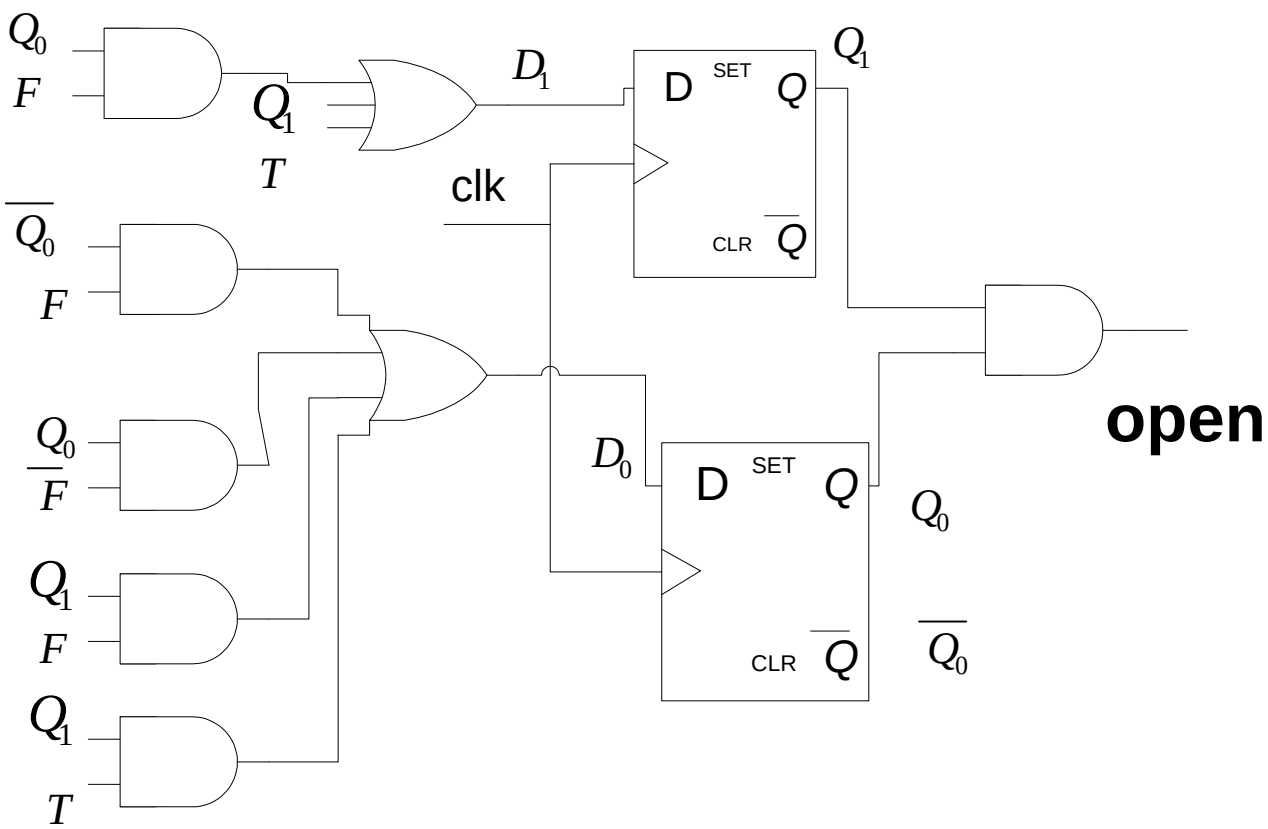

5p=F

10p=T

$D_1 = Q_1 + T + Q_0 . F$

$D_0 = F.Q_0' + Q_0.F' + Q_1 .F + Q_1 .T$

Open $= Q_1 Q_0$

Vending Machine State Transition Diagram for J-K flip flops implementation

Present state		Inputs		Next state					
Q_1	Q_0	D	N	D_1	D_0	J_1	K_1	J_0	K_0
0	0	0	0	0	0	0	X	0	X
		0	1	0	1	0	X	1	X
		1	0	1	0	1	X	0	X
		1	1	X	X	x	X	X	X
0	1	0	0	0	0	0	X	X	0
		0	1	1	0	1	X	X	1
		1	0	1	1	1	X	X	0
		1	1	X	X	x	X	X	X
1	0	0	0	1	0	x	0	0	X
		0	1	1	1	x	0	1	X
		1	0	1	1	x	0	1	X
		1	1	X	X	x	x	X	X
1	1	0	0	1	1	x	0	X	0
		0	1	1	1	x	0	X	0
		1	0	1	1	x	0	X	0
		1	1	X	X	x	x	X	X

Vending Machine- K Maps for J-K flip flops implementation

J_1

DN \ Q1Q0	00	01	11	10
00	0	0	X	X
01	0	1	X	X
11	X	X	X	X
10	1	1	X	X

Q1 (11, 10); N (01, 11); D (11, 10); Q0 (00, 01, 11, 10)

K_1

DN \ Q1Q0	00	01	11	10
00	x	x	0	0
01	x	x	0	0
11	X	X	X	X
10	X	X	0	0

Q1 (11, 10); N (01, 11); D (11, 10); Q0 (00, 01, 11, 10)

J_0

DN \ Q1Q0	00	01	11	10
00	0	X	X	0
01	1	X	X	1
11	X	X	X	X
10	0	X	X	1

Q1 (11, 10); D (01, 11); C (11, 10); Q0 (00, 01, 11, 10)

K_0

DN \ Q1Q0	00	01	11	10
00	X	0	0	X
01	X	1	0	X
11	X	X	X	X
10	X	0	0	X

Q1 (11, 10); N (01, 11); D (11, 10); B (00, 01, 11, 10)

J_1 = ?

K_1 = ?

J_0 = ?

K = ?

Vending Machine- K Maps for J-K flip flops implementation

J_1

DN \ Q1Q0	00	01	11	10
00	0	0	X	X
01	0	1	X	X
11	X	X	X	X
10	1	1	X	X

Q1 (columns 11, 10); N (rows 01, 11); D (rows 11, 10); Q0 (columns 01, 11)

K_1

DN \ Q1Q0	00	01	11	10
00	x	x	0	0
01	x	x	0	0
11	X	X	X	X
10	X	X	0	0

Q1 (columns 11, 10); N (rows 01, 11); D (rows 11, 10); Q0 (columns 01, 11)

J_0

DN \ Q1Q0	00	01	11	10
00	0	X	X	0
01	1	X	X	1
11	X	X	X	X
10	0	X	X	1

Q1 (columns 11, 10); D (rows 01, 11); C (rows 11, 10); Q0 (columns 01, 11)

K_0

DN \ Q1Q0	00	01	11	10
00	X	0	0	X
01	X	1	0	X
11	X	X	X	X
10	X	0	0	X

Q1 (columns 11, 10); N (rows 01, 11); D (rows 11, 10); B (columns 01, 11)

$J_1 = D + Q_0 . N$

$K_1 = 0$

$J_0 = Q_1' . N + Q_1 . D$

$K_0 = Q_1' . N$

Vending Machine- J-K flip flops implementation

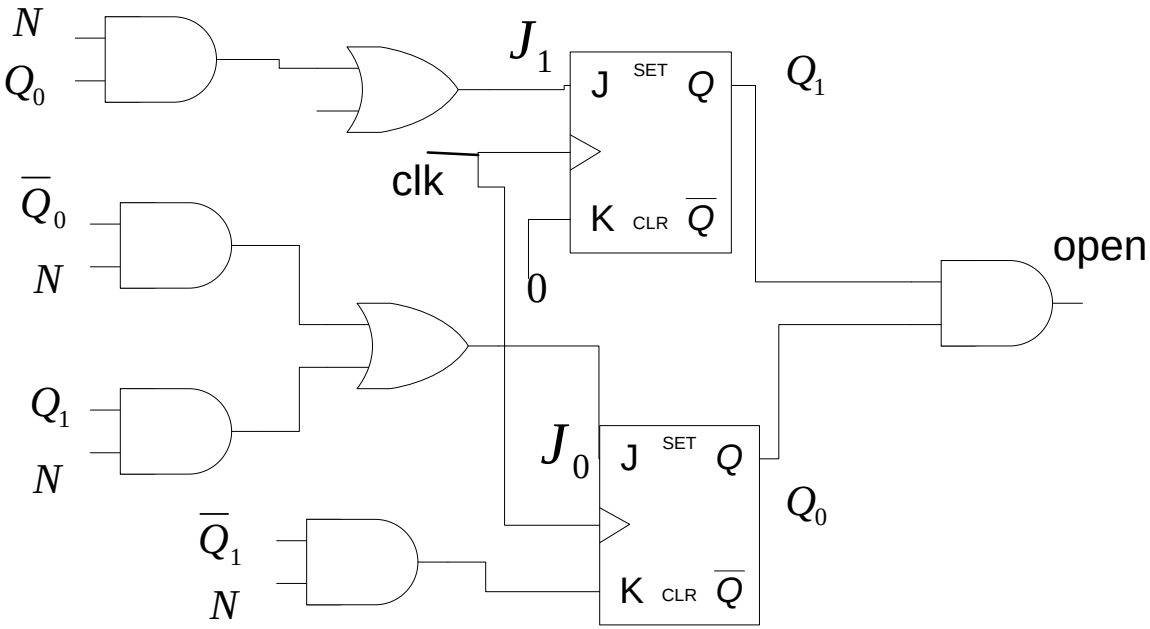

$J_1 = D + Q_0 . N$

$J_0 = Q_1' . N + Q_1 . D$

$K_1 = 0$

$K_0 = Q_1' . N$

Moore vs. Mealy FSM

- Design Moore and Mealy FSMs that detects

1101.

State Transition Diagrams

Moore FSM

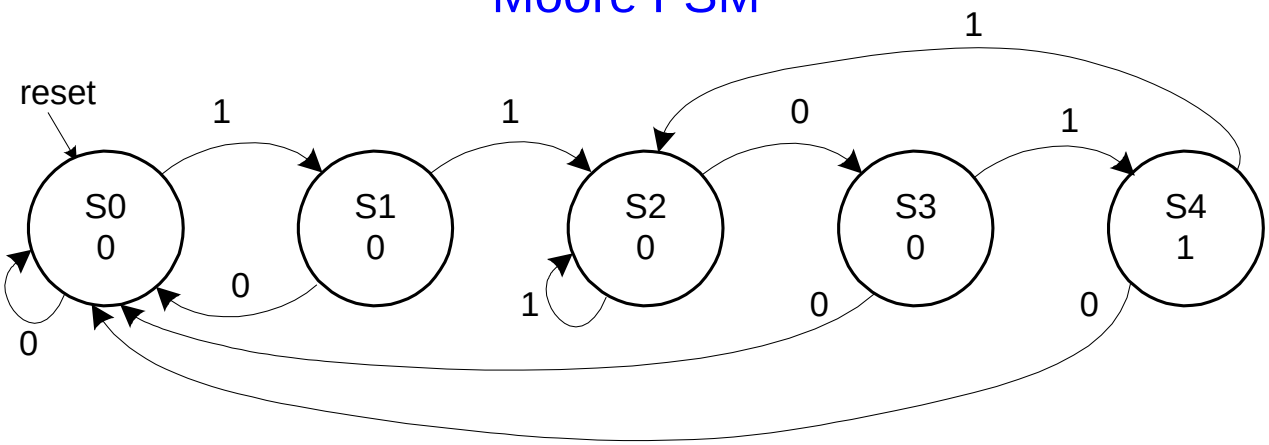

Mealy FSM: arcs indicate input/output

Mealy FSM

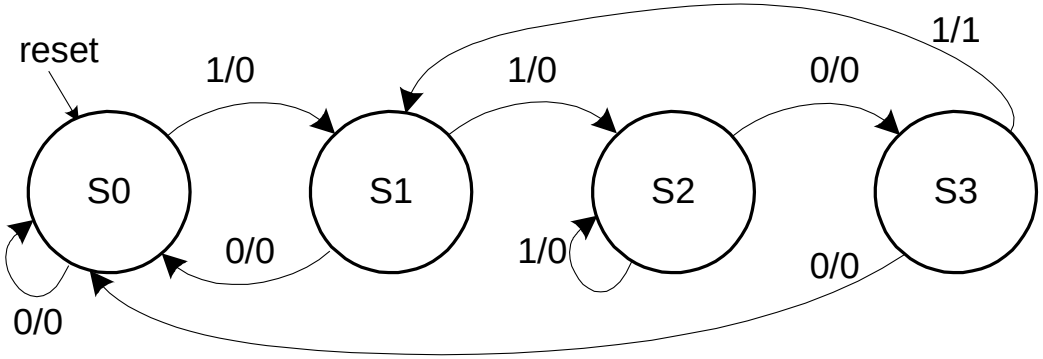

Moore FSM State Transition Table

Current State			Inputs	Next State		
S_2	S_1	S_0	A	S'_2	S'_1	S'_0
0	0	0	0			
0	0	0	1			
0	0	1	0			
0	0	1	1			
0	1	0	0			
0	1	0	1			
0	1	1	0			
0	1	1	1			
1	0	0	0			
1	0	0	1			

State	Encoding
S0	000
S1	001
S2	010
S3	011
S4	100

Moore FSM State Transition Table

Current State			Inputs	Next State		
S_2	S_1	S_0	A	S'_2	S'_1	S'_0
0	0	0	0	0	0	0
0	0	0	1	0	0	1
0	0	1	0	0	0	0
0	0	1	1	0	1	0
0	1	0	0	0	1	1
0	1	0	1	0	1	0
0	1	1	0	0	0	0
0	1	1	1	1	0	0
1	0	0	0	0	0	0
1	0	0	1	0	1	0

State	Encoding
S0	000
S1	001
S2	010
S3	011
S4	100

Moore FSM Output Table

Current State			Output
S_2	S_1	S_0	Y
0	0	0	
0	0	1	
0	1	0	
0	1	1	
1	0	0	

Moore FSM Output Table

Current State			Output
S_2	S_1	S_0	Y
0	0	0	0
0	0	1	0
0	1	0	0
0	1	1	0
1	0	0	1

$$Y = S_2$$

Mealy FSM State Transition and Output Table

Current State		Input	Next State		Output
Q_1	Q_0	A	Q'_1	Q'_0	Y
0	0	0			
0	0	1			
0	1	0			
0	1	1			
1	0	0			
1	0	1			
1	1	0			
1	1	1			

State	Encoding
S0	00
S1	01
S2	10
S3	11

Mealy FSM State Transition and Output Table

Current State		Input	Next State		Output
Q_1	Q_0	A	Q'_1	Q'_0	Y
0	0	0	0	0	0
0	0	1	0	1	0
0	1	0	0	0	0
0	1	1	1	0	0
1	0	0	1	1	0
1	0	1	1	0	0
1	1	0	0	0	0
1	1	1	0	1	1

State	Encoding
S0	00
S1	01
S2	10
S3	11

Moore FSM Schematic

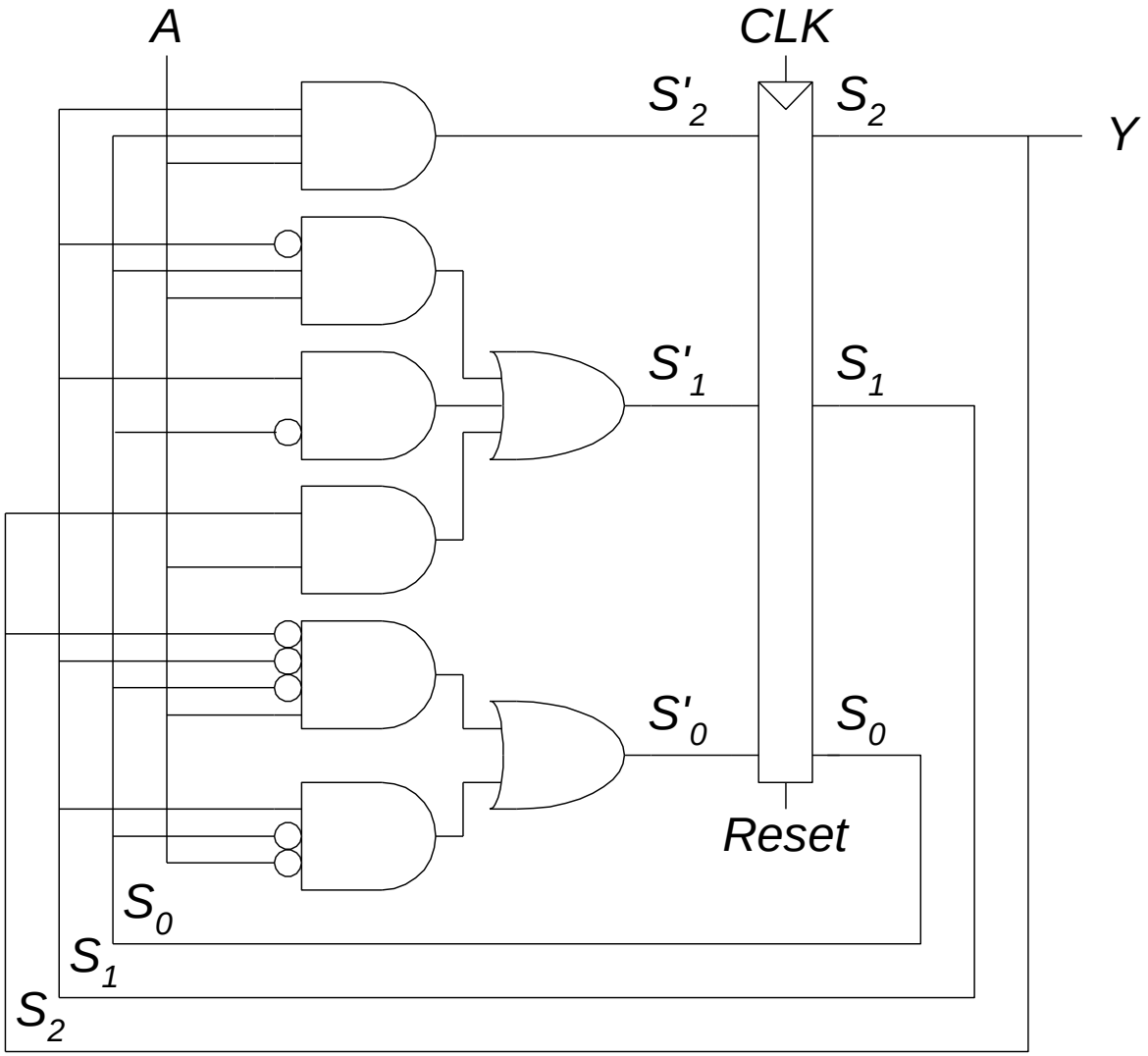

Mealy FSM Schematic

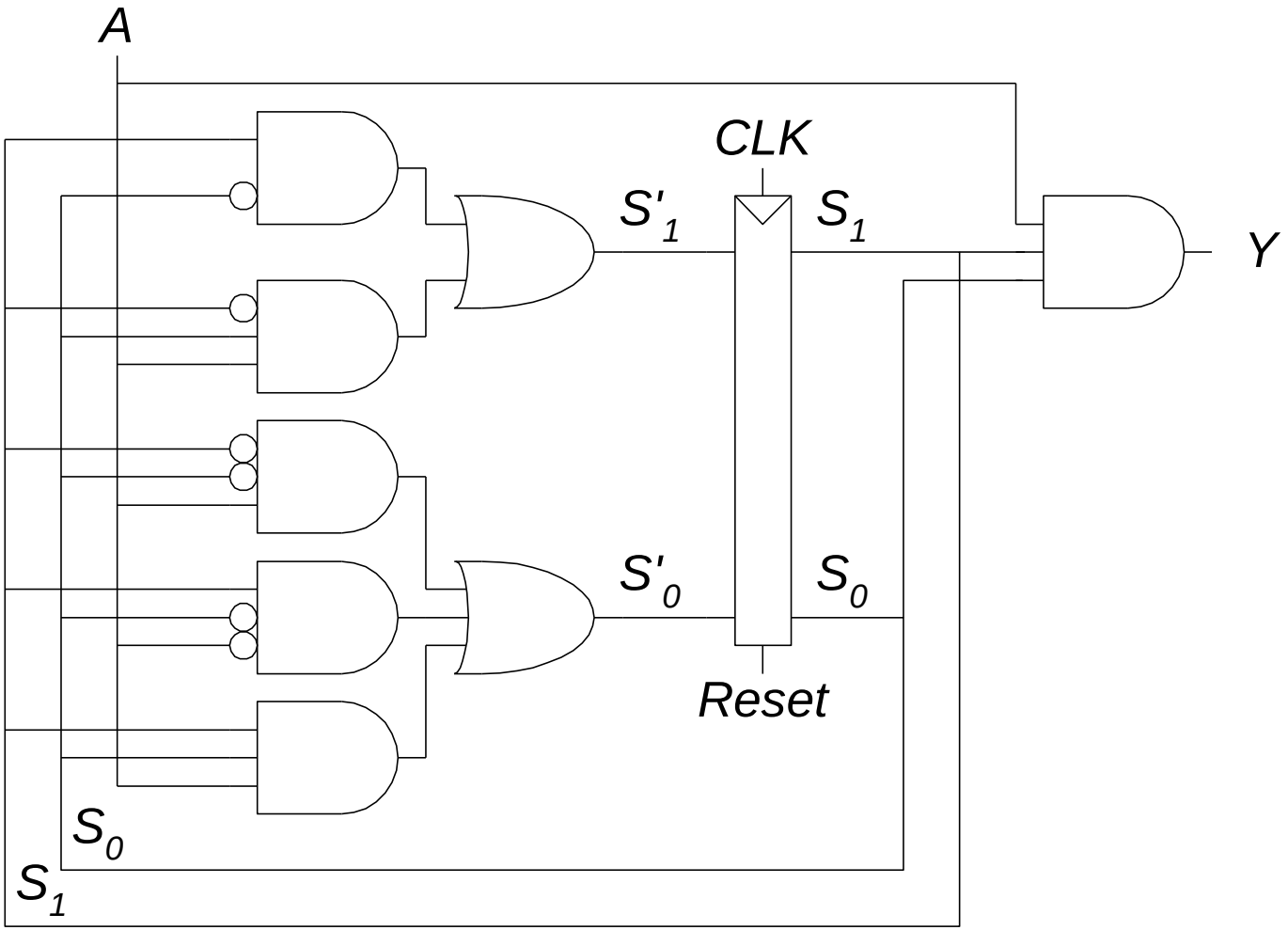

Moore and Mealy Timing Diagram

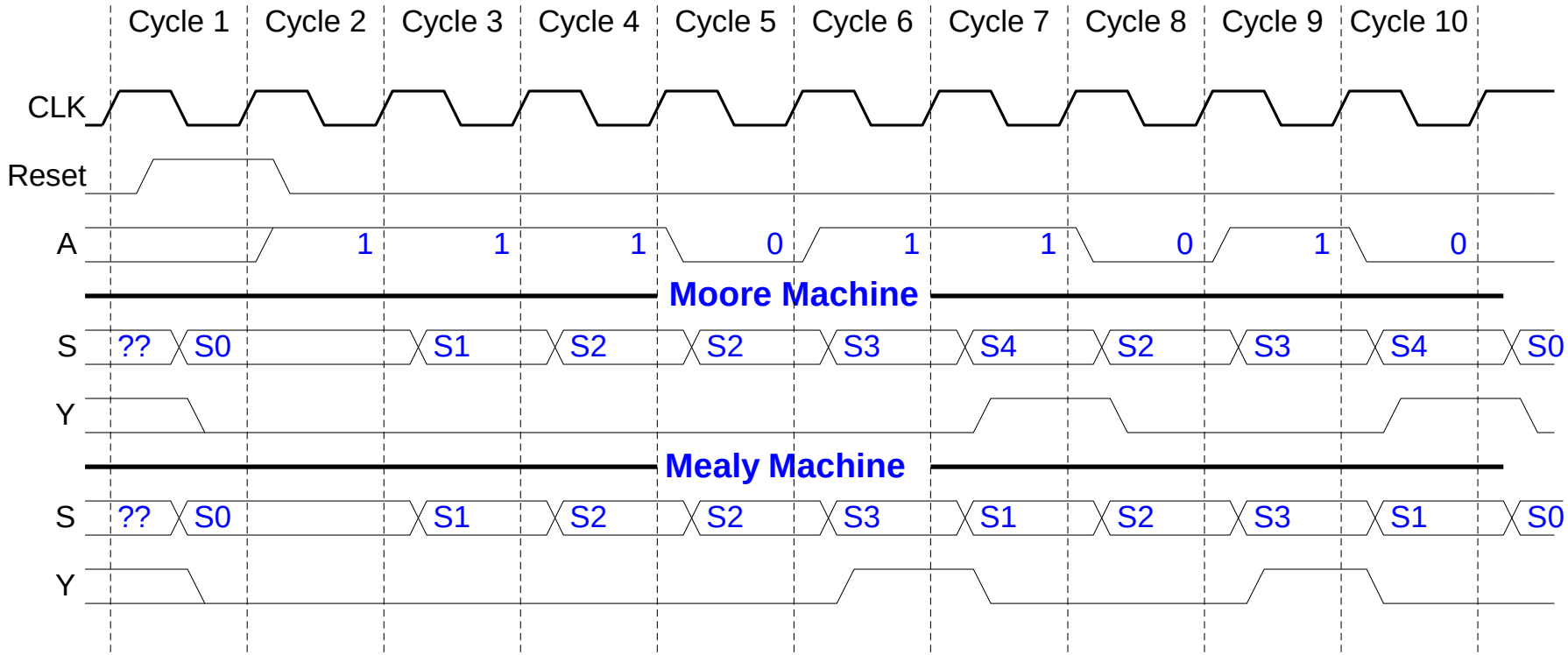

Timing

- Flip-flop samples *D* at clock edge
- *D* must be stable when it is sampled
- Similar to a photograph, *D* must be stable around the clock edge
- If *D* is changing when it is sampled, metastability can occur

Input Timing Constraints

- Setup time: t_{setup} = time *before* the clock edge that data must be stable (i.e. not changing)
- Hold time: t_{hold} = time *after* the clock edge that data must be stable
- Aperture time: t_a = time around clock edge that data must be stable ($t_a = t_{setup} + t_{hold}$)

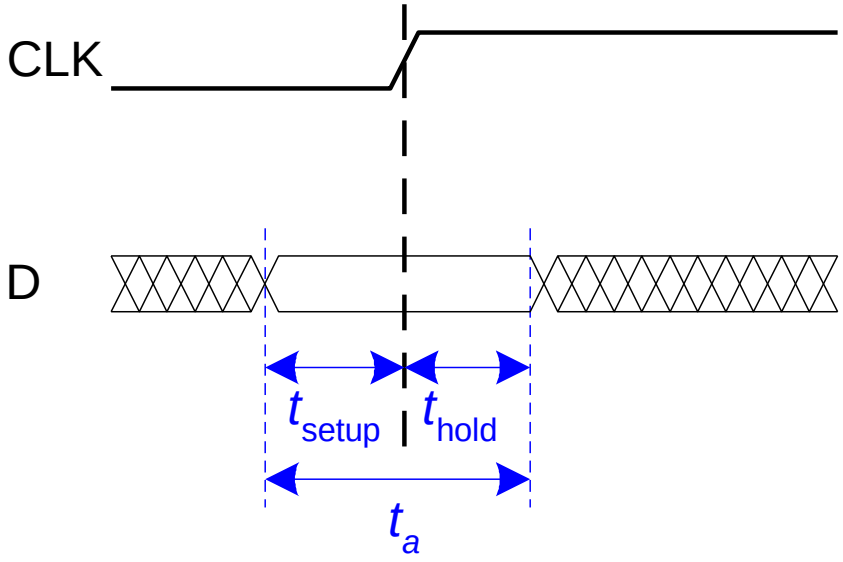

Output Timing Constraints

- Propagation delay: t_{pcq} = time after clock edge that the output Q is guaranteed to be stable (i.e., to stop changing)
- Contamination delay: t_{ccq} = time after clock edge that Q might be unstable (i.e., start changing)

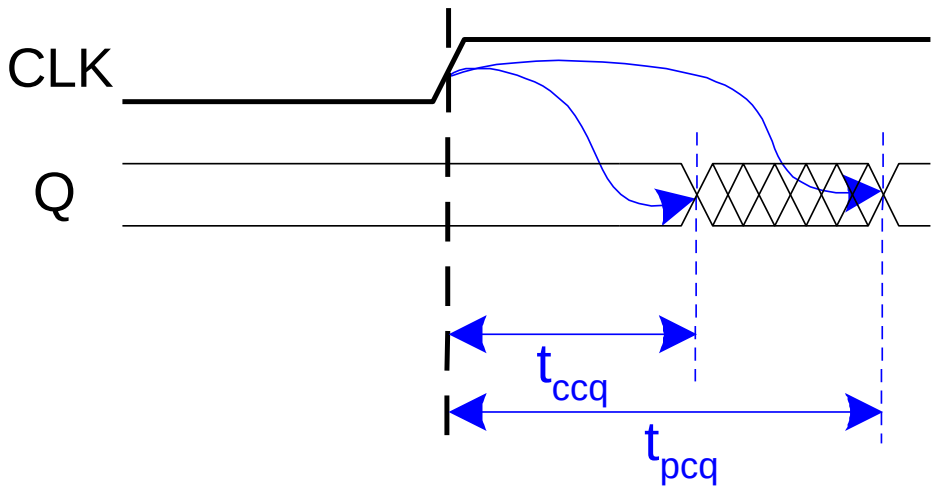

Dynamic Discipline

- The input to a synchronous sequential circuit must be stable during the aperture (setup and hold) time around the clock edge.
- Specifically, the input must be stable
  - at least t_{setup} before the clock edge
  - at least until t_{hold} after the clock edge

Timing

- The delay between registers has a **minimum** and **maximum** delay, dependent on the delays of the circuit elements

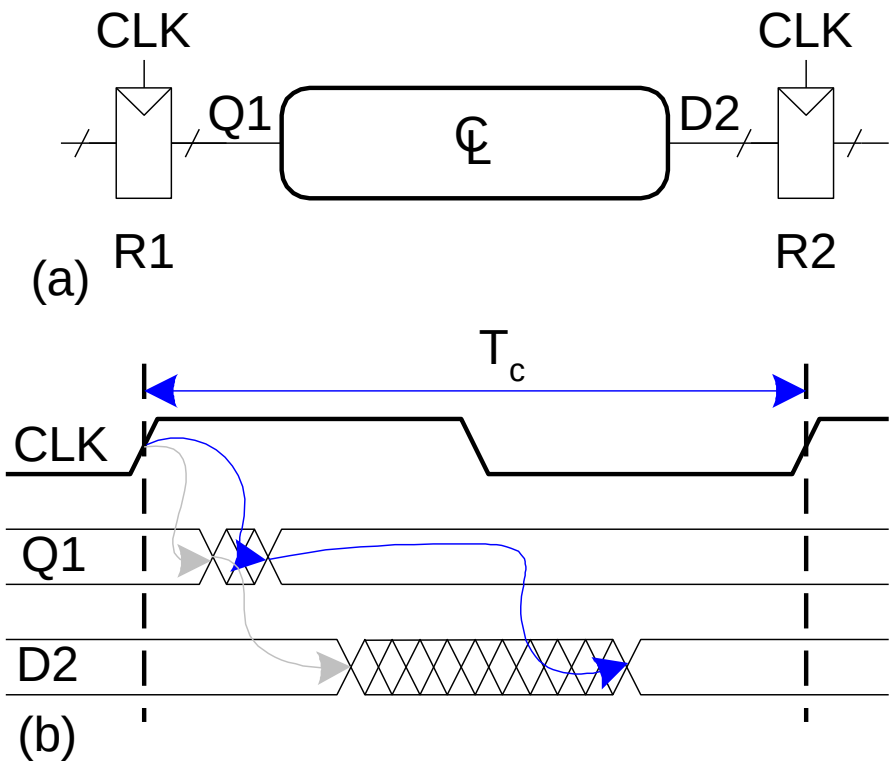

Setup Time Constraint

- The setup time constraint depends on the **maximum** delay from register R1 through the combinational logic.
- The input to register R2 must be stable at least t_{setup} before the clock edge.

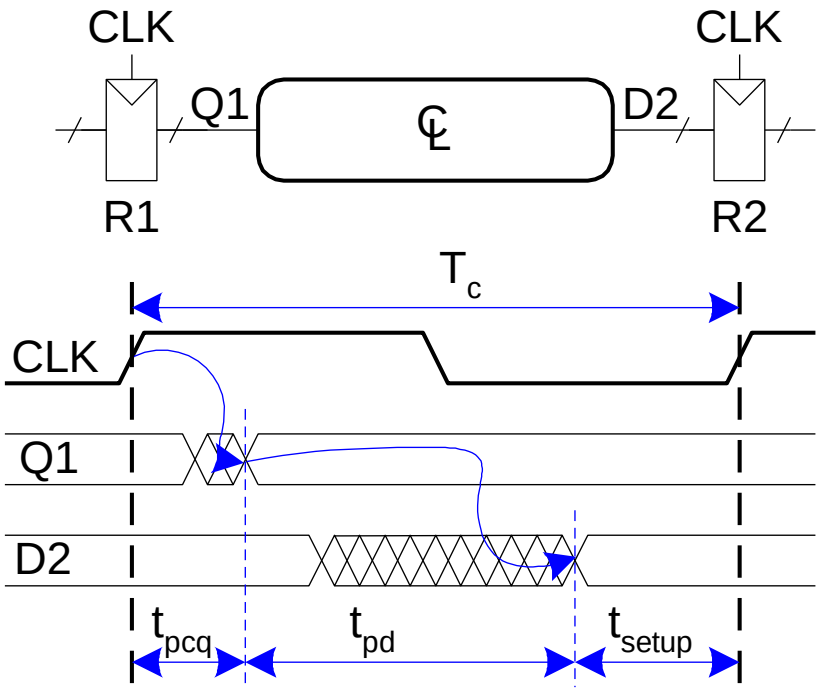

$$T_c \geq$$

Setup Time Constraint

- The setup time constraint depends on the **maximum** delay from register R1 through the combinational logic.
- The input to register R2 must be stable at least t_{setup} before the clock edge.

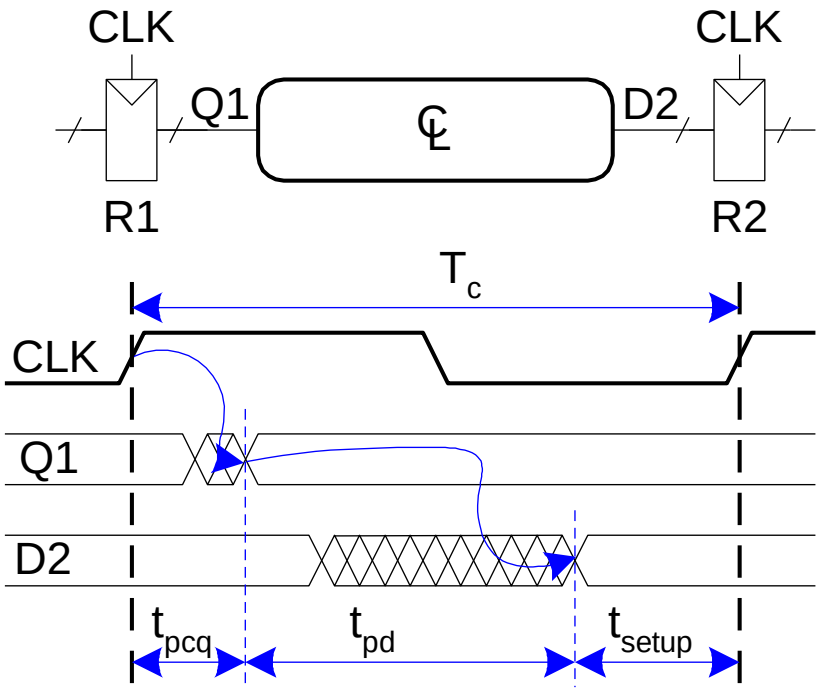

$$T_c \geq t_{pcq} + t_{pd} + t_{setup}$$

$$t_{pd} \leq$$

Setup Time Constraint

- The setup time constraint depends on the **maximum** delay from register R1 through the combinational logic.
- The input to register R2 must be stable at least t_{setup} before the clock edge.

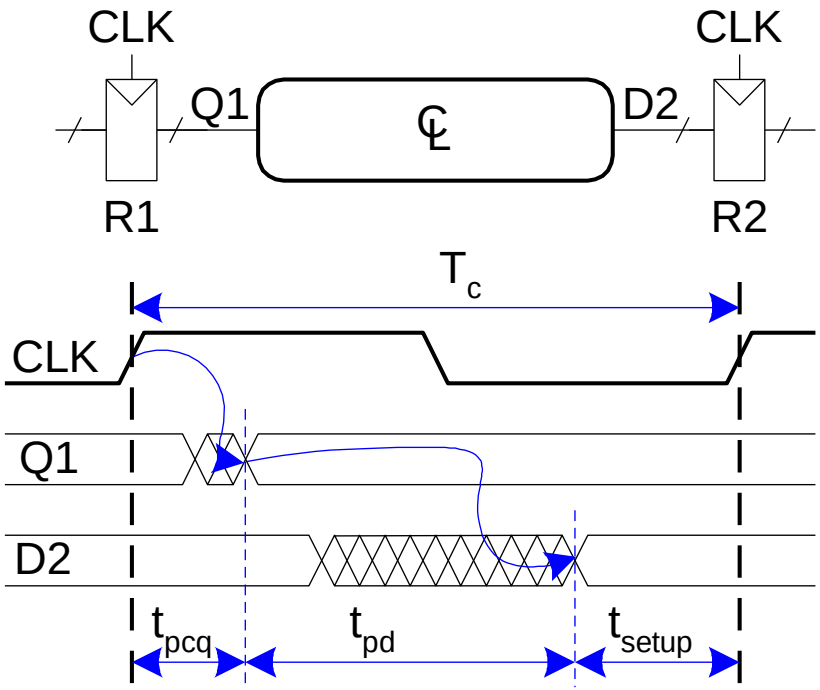

$$T_c \geq t_{pcq} + t_{pd} + t_{\text{setup}}$$

$$t_{pd} \leq T_c - (t_{pcq} + t_{\text{setup}})$$

Hold Time Constraint

- The hold time constraint depends on the **minimum** delay from register R1 through the combinational logic.
- The input to register R2 must be stable for at least t_{hold} after the clock edge.

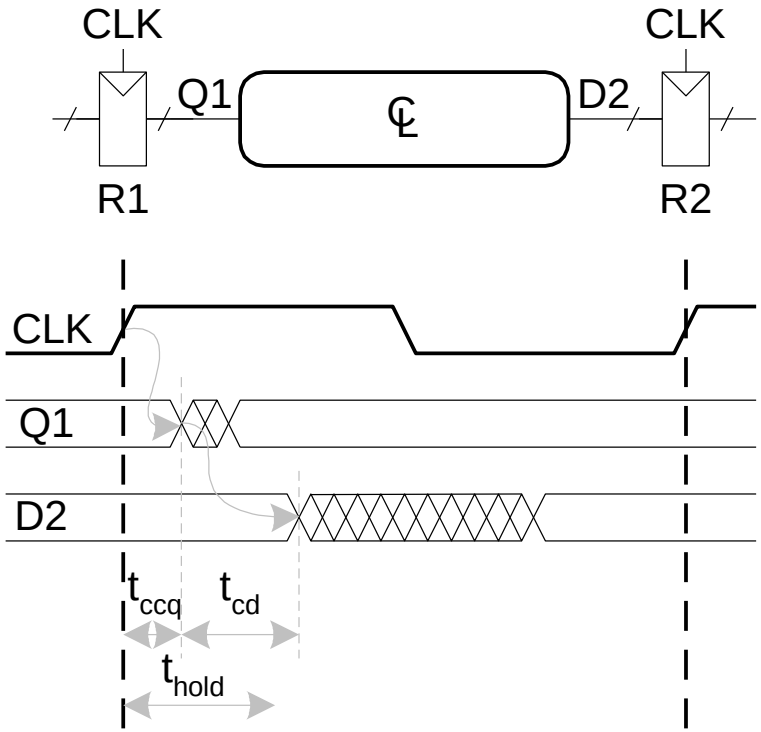

$t_{hold} <$

Hold Time Constraint

- The hold time constraint depends on the **minimum** delay from register R1 through the combinational logic.
- The input to register R2 must be stable for at least t_{hold} after the clock edge.

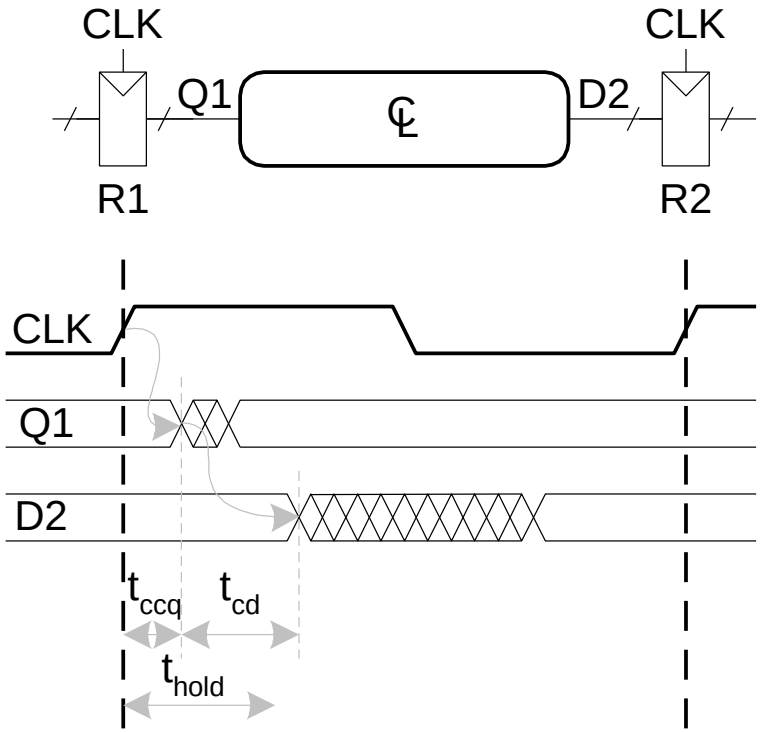

$$t_{\text{hold}} < t_{ccq} + t_{cd}$$

$$t_{cd} >$$

Hold Time Constraint

- The hold time constraint depends on the **minimum** delay from register R1 through the combinational logic.
- The input to register R2 must be stable for at least t_{hold} after the clock edge.

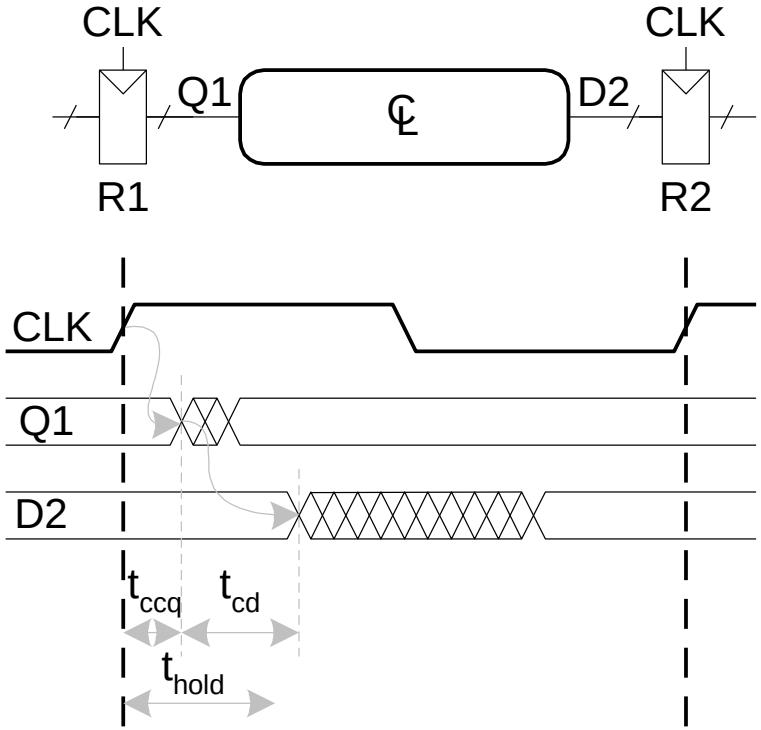

$$t_{\text{hold}} < t_{ccq} + t_{cd}$$

$$t_{cd} > t_{\text{hold}} - t_{ccq}$$

Timing Analysis

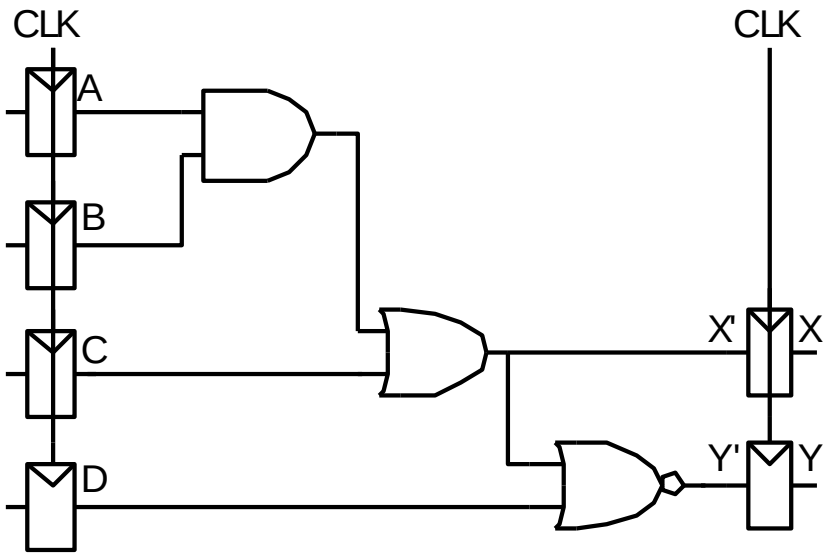

Timing Characteristics

t_{ccq} = 30 ps

t_{pcq} = 50 ps

t_{setup} = 60 ps

t_{hold} = 70 ps

per gate

t_{pd} = 35 ps

t_{cd} = 25 ps

t_{pd} =

t_{cd} =

Setup time constraint:

$T_c \geq$

$f_c = 1/T_c =$

Hold time constraint:

$t_{ccq} + t_{pd} > t_{hold}$?

Timing Analysis

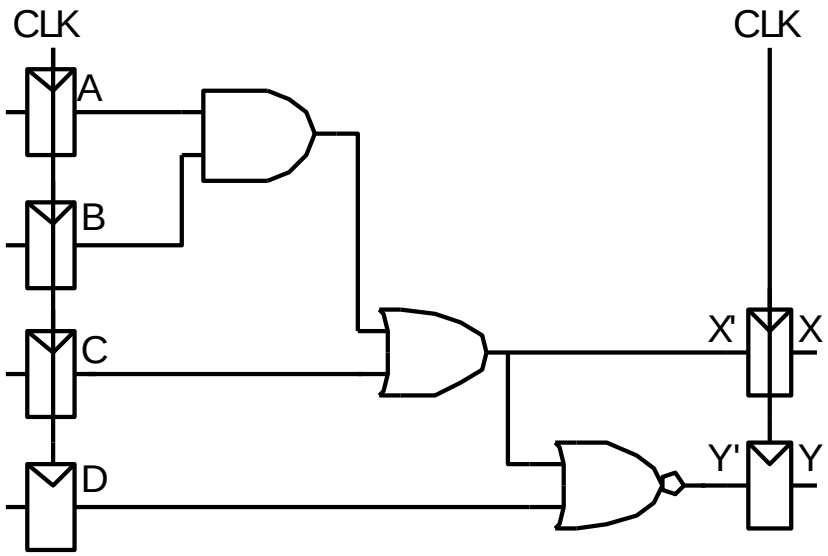

Timing Characteristics

t_{ccq} = 30 ps

t_{pcq} = 50 ps

t_{setup} = 60 ps

t_{hold} = 70 ps

per gate

t_{pd} = 35 ps

t_{cd} = 25 ps

t_{pd} = 3 x 35 ps = 105 ps

t_{cd} = 25 ps

Setup time constraint:

$T_c \geq (50 + 105 + 60)$ ps = 215 ps

$f_c = 1/T_c$ = 4.65 GHz

Hold time constraint:

$t_{ccq} + t_{cd} > t_{hold}$?

(30 + 25) ps > 70 ps ? No!

Fixing Hold Time Violation

Add buffers to the short paths:

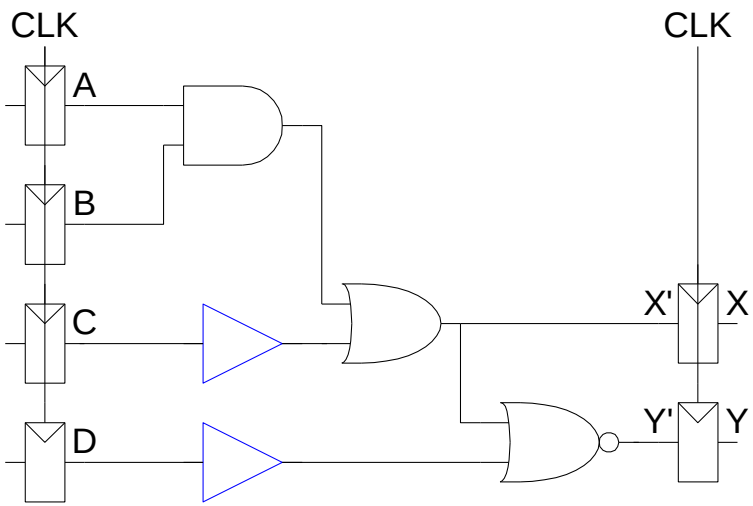

Timing Characteristics

t_{ccq} = 30 ps

t_{pcq} = 50 ps

t_{setup} = 60 ps

t_{hold} = 70 ps

per gate

t_{pd} = 35 ps

t_{cd} = 25 ps

t_{pd} =

t_{cd} =

Setup time constraint:

$T_c \geq$

f_c =

Hold time constraint:

$t_{ccq} + t_{pd} > t_{hold}$?

Fixing Hold Time Violation

Add buffers to the short paths:

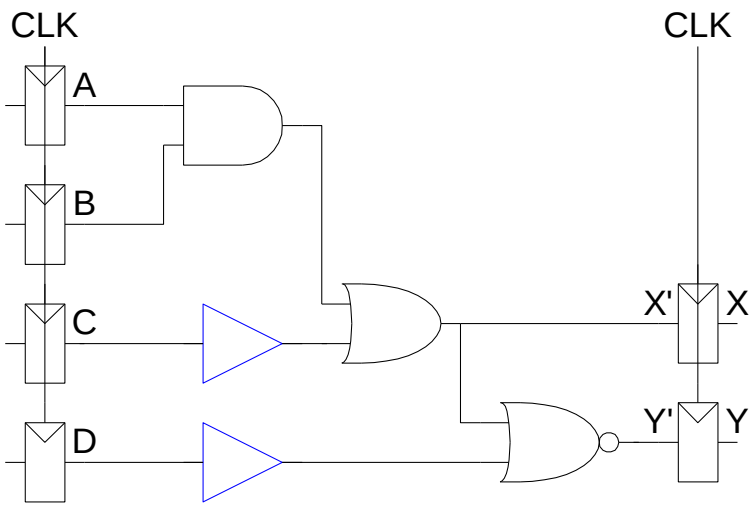

t_{pd} = 3 x 35 ps = 105 ps

t_{cd} = 2 x 25 ps = 50 ps

Setup time constraint:

$T_c \geq$ (50 + 105 + 60) ps = 215 ps

$f_c = 1/T_c$ = 4.65 GHz

Timing Characteristics

t_{ccq} = 30 ps

t_{pcq} = 50 ps

t_{setup} = 60 ps

t_{hold} = 70 ps

per gate

t_{pd} = 35 ps

t_{cd} = 25 ps

Hold time constraint:

$t_{ccq} + t_{cd} > t_{hold}$?

(30 + 50) ps > 70 ps ? Yes!

Clock Skew

- The clock doesn't arrive at all registers at the same time
- Skew is the difference between two clock edges
- Examine the worst case to guarantee that the dynamic discipline is not violated for any register – many registers in a system!

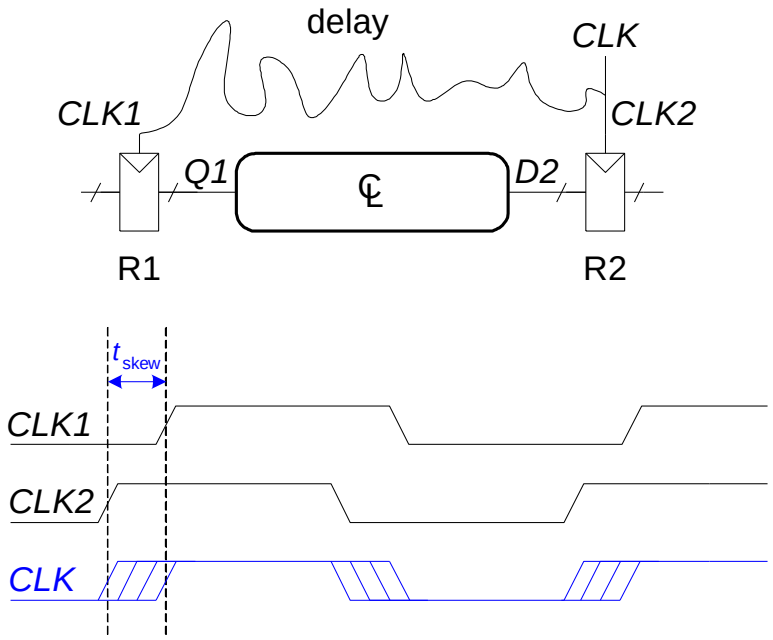

Setup Time Constraint with Clock Skew

- In the worst case, the CLK2 is earlier than CLK1

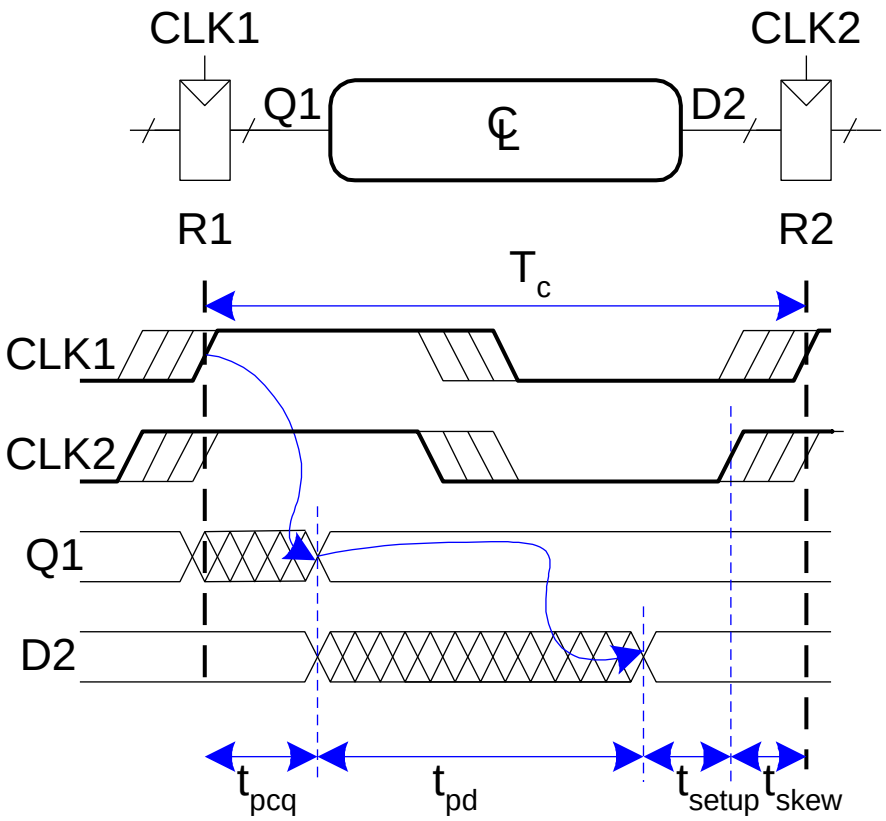

$$T_c \geq$$

Setup Time Constraint with Clock Skew

- In the worst case, the CLK2 is earlier than CLK1

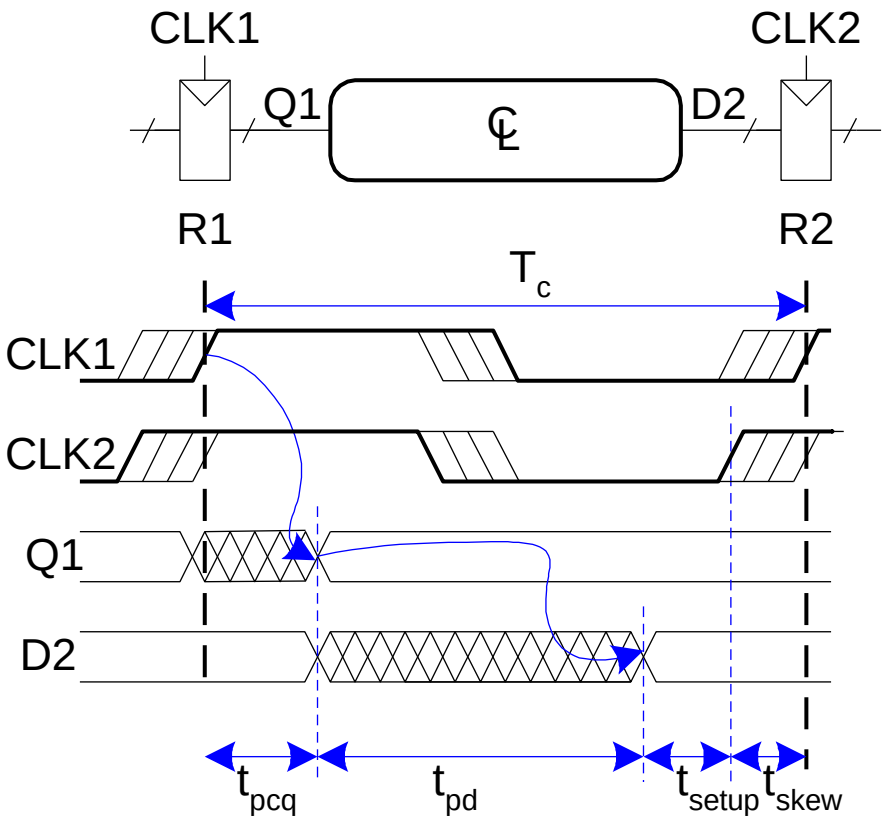

$$T_c \geq t_{pcq} + t_{pd} + t_{\text{setup}} + t_{\text{skew}}$$

$$t_{pd} \leq$$

Setup Time Constraint with Clock Skew

- In the worst case, the CLK2 is earlier than CLK1

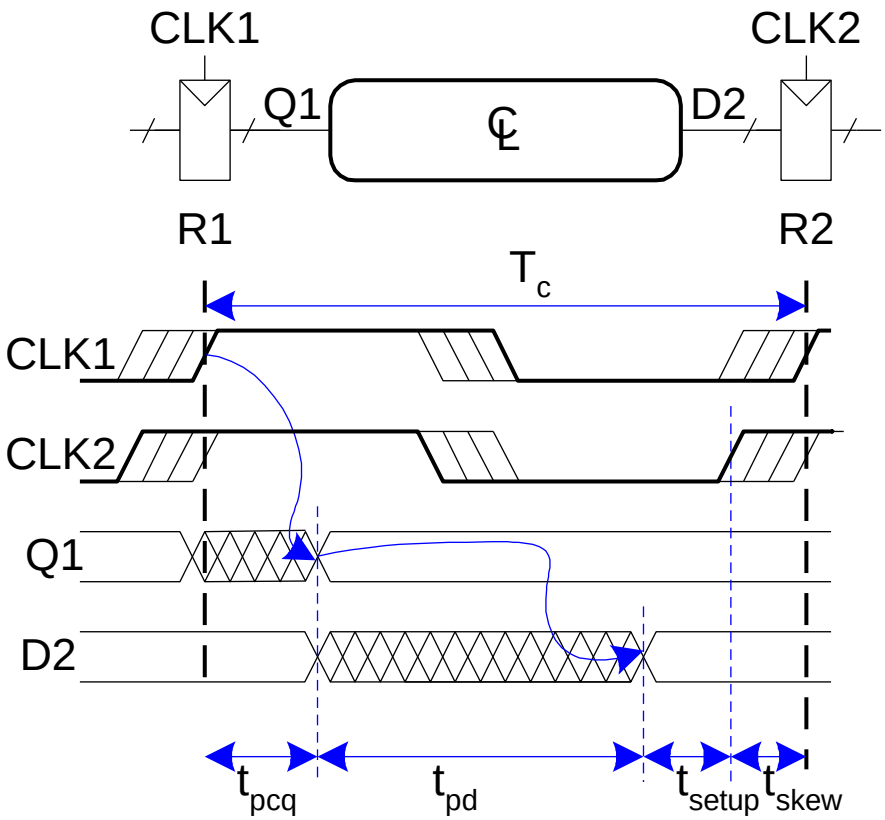

$$T_c \geq t_{pcq} + t_{pd} + t_{\text{setup}} + t_{\text{skew}}$$

$$t_{pd} \leq T_c - (t_{pcq} + t_{\text{setup}} + t_{\text{skew}})$$